TABLE OF CONTENTS

Section **Page**

1.0 GENERAL 1

1.1 INTRODUCTION 1

1.1.1 Purpose 1
1.1.2 Scope 1
1.1.3 Procedures and Application 2
1.1.4 Abbreviations, Acronyms 3
1.1.5 Project Management 3
1.1.6 Sustainable Building Policy 4
1.1.7 Background 4

1.2 GENERAL DESIGN PHILOSOPHY 5

1.2.1 Public Involvement 5
1.2.2 Land Use 5
1.2.3 Aesthetics/Arts Program 6
1.2.4 Accessibility 6
1.2.5 Safety and Security 6
1.2.6 Operation and Maintenance 7

1.3 LOCAL CLIMATIC CONDITIONS 8

1.4 VALUE ENGINEERING/RISK MANAGEMENT 9

1.5 SAFETY MANAGEMENT AUDIT PROGRAM 9

1.6 COMMISSIONING AND TESTING 10

1.6.1 General 10
1.6.2 Activation 10
1.6.3 Overhead Catenary System Certification 10

1.7 STANDARD RECORD DOCUMENTS 11

1.7.1 Plan of Record Drawings General Requirements 11
1.7.2 Operation and Maintenance Manuals General Requirements 12
1.7.3 Other Documentation Requirements 20

2.0 VEHICLES 1

2.1 INTRODUCTION 1

2.2 RAIL STANDARDS AND OTHER DESIGN CONSIDERATIONS 1

2.2.1 Flammability, Smoke, and Toxicity Considerations 1
2.2.2 Environmental Considerations 1
2.2.3 Shock and Vibration Considerations 1
2.2.4 Electromagnetic Interference Considerations 1
2.2.5 Track Design Considerations 2

2.3 LIGHT RAIL VEHICLES 2

2.3.1 General 2
2.3.2 U2 Light Rail Vehicle 3
2.3.3 SD160 Light Rail Vehicle 6
2.3.4 Design Vehicle 9

2.4 AUXILIARY EQUIPMENT 9
2.4.1 Equipment Description 9
2.4.2 Work Train Characteristics 9
2.5 STATIC AND DYNAMIC ENVELOPE CONSIDERATIONS 10

3.0 CLEARANCES AND RIGHT-OF-WAY 1
3.1 INTRODUCTION 1
3.2 DEFINITIONS AND TERMINOLOGY 1
3.2.1 Clearance Related 1
3.2.2 Walkway Related 2
3.2.3 Right-of-Way Related 2
3.3 Clearances 3
3.3.1 Edmonton's LRV 3
3.3.2 Edmonton's Design Vehicle 4
3.3.3 Minimum Vehicle Running Clearance Envelope (VRCE) 5
3.3.4 Application of Clearance Criteria 6
3.3.5 Minimum Vertical (Overhead) Clearance 8
3.3.6 Special Clearance Situations 9
3.4 TYPICAL SECTIONS COMBINED MAJOR TRACKWAY ELEMENTS 9
3.5 DETERMINATION OF ROW LIMITS 9
3.5.1 General 9
3.5.2 LRT Elements and Components 11
3.5.3 Typical Cross Section Configurations 12
3.6 RIGHT-OF-WAY ACQUISITION 14
3.6.1 Classification of Right-of-Way for Acquisition Purposes 14
3.6.2 ROW Acquisition Plans 14
3.6.3 Responsibility for ROW Acquisition 15

4.0 TRACK ALIGNMENT 1
4.1 GENERAL 1
4.1.1 Introduction 1
4.1.2 Applicable Codes, Regulations, Standards and Practices 1
4.1.3 Design Basis 1
4.1.4 Optimization 1
4.1.5 Design Speed 2
4.1.6 Definitions and Nomenclatures 3
4.2 HORIZONTAL ALIGNMENT 6
4.2.1 General 6
4.2.2 Tangent Sections 8
4.2.3 Curved Lines 9
4.3 VERTICAL ALIGNMENT 14

4.3.1 General 14
4.3.2 Gradient 15
4.3.3 Vertical Curves (VC) 15
4.3.4 Vertical Tangents 16
4.3.5 Asymmetrical Vertical Curves 16

4.4 COMBINED HORIZONTAL AND VERTICAL CURVES 16

4.5 VERTICAL CURVE RESTRICTIONS 16

4.6 SUPPLEMENTARY REFERENCE INFORMATION (FOR INFORMATION ONLY) 17

5.0 TRACKWORK 1

5.1 INTRODUCTION 1

5.2 GENERAL STANDARDS AND SYSTEM REQUIREMENTS 1

5.2.1 General System Requirements 1
5.2.2 Track System Classification 1
5.2.3 Applicable Design Standards and Governing Criteria 2
5.2.4 5.2.4 Electrical Isolation 4
5.2.5 Noise and Vibration Attenuation 4

5.3 TRACK STRUCTURE (INCLUDING YARD TRACK) 5

5.3.1 General 5
5.3.2 Rail Deflection 5
5.3.3 At-Grade (Surface) Track 6
5.3.4 Track in Portals and Tunnels 7
5.3.5 Track on Aerial Structures 8
5.3.6 Embedded Track 8
5.3.7 Track Transitional Requirements 9

5.4 SPECIAL TRACKWORK 10

5.4.1 General Requirements 10
5.4.2 Turnouts 10
5.4.3 Crossovers 12
5.4.4 Diamonds 13
5.4.5 Sliding Rail Joints 13
5.4.6 Lateral Restraining Devices 14
5.4.7 Guard Rails 14
5.4.8 Restraining Rails 14

5.5 GRADE CROSSINGS 15

5.5.1 Road Crossings 15
5.5.2 Pedestrian Crossings 15
5.5.3 Requirements 15
5.5.4 Service Life and Maintenance 16
5.5.5 Corrosion Protection 16

5.6 TRACK COMPONENTS 16

5.6.1 Running Rails 16
5.6.2 Fastening Devices 18
5.6.3 Ties 20
5.6.4 Ballast 23

5.6.5 Sub-ballast 23
5.6.6 Subgrade 23
5.6.7 Ballast Curb 24

5.7 OTHER TRACKWORK MATERIALS (OTM) 24

5.7.1 Switch Machines 24
5.7.2 Switch Blowers 24
5.7.3 Switch Point Detectors 25
5.7.4 Hold-down Bars 25
5.7.5 Roller Plates 25
5.7.6 Switch Point Protector 25
5.7.7 Friction End Stops 25
5.7.8 Wheel Stops 26
5.7.9 Rail Lubricators 26
5.7.10 Lateral Track Bracing for Stations 26
5.7.11 Rail Anchors 26

5.8 METHODS OF JOINING RAIL 27

5.8.1 Welding Processes 27
5.8.2 Non-insulated Joints 28
5.8.3 Insulated Joints 28

5.9 TRACK CONSTRUCTION TOLERANCES 28

5.9.1 General 28

5.10 RAIL GRINDING 29

5.11 DESIGN COORDINATION 30

5.12 QUALITY ASSURANCE AND QUALITY CONTROL 30

5.13 PROJECT DOCUMENTATION 30

6.0 TRACTION POWER 1

6.1 GENERAL 1

6.1.1 Introduction 1
6.1.2 System Description 1
6.1.3 Abbreviations and Definitions 1
6.1.4 Applicable Codes, Standards, Regulations and Guidelines 2
6.1.5 Traction Power System Elements 3
6.1.6 Traction Power System Loads and Parameters 4
6.1.7 Safety and Security 5
6.1.8 Environmental Considerations 6

6.2 TRACTION POWER SUBSTATIONS 6

6.2.1 General Design Principles 6
6.2.2 Substation Facility 6
6.2.3 Substation Equipment 10
6.2.4 Substation Controls 14
6.2.5 Protection Systems and Devices 15
6.2.6 Protection Relay Descriptions 16

6.3 TRACTION POWER DISTRIBUTION SYSTEM 18

6.3.1 Positive Feeder Cables 18
6.3.2 Negative Return Cables 18
6.3.3 Tunnel Parallel Feeder Cables 19
6.3.4 High Voltage AC Power Cables 19
6.3.5 Electrical Switches 19

6.4 DUCT BANKS AND CONDUITS 19

6.5 OVERHEAD TRACTION POWER SYSTEM 20

6.5.1 Overview 20
6.5.2 Design Philosophy 20
6.5.3 Design Requirements and Criteria 21
6.5.4 Details of Overhead Catenary System 25
6.5.5 Overhead Catenary System Configurations 27
6.5.6 Catenary Support Components 28
6.5.7 In-Span Assemblies 31

7.0 SIGNALS 1

7.1 GENERAL 1

7.1.1 Introduction 1
7.1.2 Abbreviations, Definitions, Nomenclatures 1
7.1.3 System Description 2
7.1.4 Applicable Codes, Standards, Regulations and Guidelines 3

7.2 PHILOSOPHY 4

7.2.1 Goals and Objectives 4
7.2.2 Operating Assumptions and Principles 5
7.2.3 Checked-Redundancy Principle 5

7.3 LRT SIGNAL SYSTEM OPERATION 6

7.3.1 Headway and Train Size 6
7.3.2 Direction of Running 6
7.3.3 Vehicles 6

7.4 LRT SYSTEM REQUIREMENTS 7

7.4.1 System Design 7
7.4.2 System Safety Principles 8
7.4.3 Speed Restrictions 8
7.4.4 Automatic Fixed Block Signalling 9
7.4.5 Determination of Block Location 11
7.4.6 CBTC System 11
7.4.7 Prevention of Side Collisions and Derailments 11
7.4.8 Grade Crossings 11
7.4.9 LRT Operation Functional Requirements 13
7.4.10 Wayside LRT Signal Equipment 13
7.4.11 Communication Requirements for LRT Control 13
7.4.12 Signal Aspects 13
7.4.13 ATS Interface 13

7.5 EQUIPMENT REQUIREMENTS 14

7.5.1 General 14
7.5.2 Numbering Schemes 14

7.5.3 Wayside Signals 15
7.5.4 Track Circuits 16
7.5.5 Powered Track Switches 17
7.5.6 Manual Track Switches with Switch Point Indication Interlocks 17
7.5.7 Route Key Switch 18
7.5.8 Interlocking 18
7.5.9 Central Traffic Control System 18
7.5.10 Grade Crossing Equipment 19
7.5.11 Bungalows, and Junction Boxes 20
7.5.12 Signal Room 20
7.5.13 Signal Room Power Supply 21
7.5.14 Wire and Cable 22
7.5.15 Spare Parts 23
7.5.16 Duct Banks 23
7.5.17 Knife Switches 23

7.6 INTERFACE REQUIREMENTS 24

7.7 RESPONSIBILITIES 25

7.7.1 Signal System Contractor 25
7.7.2 Deliverables 26

7.8 TESTING AND COMMISSIONING 26

7.9 TRAINING REQUIREMENTS 27

7.10 RECORD DOCUMENTS 28

8.0 COMMUNICATIONS & CONTROL 1

8.1 ACRONYMS AND ABBREVIATIONS 1

8.2 CERTIFICATIONS 4

8.2.1 Railway Certifications 4
8.2.2 Other Certifications 4
8.2.3 Regulatory Compliance 4
8.2.4 Hazard Level Classification 4
8.2.5 Electrical Safety Compliance 4
8.2.6 EMC Compliance 4
8.2.7 EMC Immunity 5
8.2.8 Environmental Compliance 5
8.2.9 Safety Standards Compliance 5
8.2.10 Telecom Interface Compliance 5
8.2.11 Electromagnetic Compatibility 5

8.3 INTRODUCTION 5

8.3.1 Fares System 5
8.3.2 Building Management System (BMS) 5
8.3.3 Supervisory Control and Data Acquisition (SCADA) 6
8.3.4 Telephone Systems 6
8.3.5 Public Address (PA) and Variable Message Sign Systems (VMS) 6
8.3.6 Radio System 6
8.3.7 Closed Circuit Television (CCTV) 7
8.3.8 Signals Network 7
8.3.9 Other Subsystems 7

8.4 APPLICABLE CODES, STANDARDS, REGULATIONS, PRACTICES 7

8.5 DESIGN REFERENCE DOCUMENTS.....7

8.5.1 General.....8
8.5.2 BMS.....8
8.5.3 Public Address System 8
8.5.4 Radio System.....8
8.5.5 CCTV.....8
8.5.6 Security System 8
8.5.7 Other LRT Control Systems.....8
8.5.8 General Design Objectives and Requirements.....8

8.6 COMMUNICATION EQUIPMENT ENVIRONMENT.....12

8.6.1 Introduction and Overview 12
8.6.2 Control Centers.....12
8.6.3 Data Centers 15
8.6.4 Communication Rooms.....17
8.6.5 Wiring Closets 19
8.6.6 HVAC General.....19
8.6.7 Powering and UPS.....19
8.6.8 Overall Workmanship.....20

8.7 COMMON INFRASTRUCTURE ENVIRONMENT 20

8.7.1 Introduction and Overview 20
8.7.2 Communications Common Infrastructure 21
8.7.3 Communication Room Common Infrastructure.....21
8.7.4 Network Architecture.....21
8.7.5 Fibre Optic Cable System 21
8.7.6 Copper Cable Network.....22
8.7.7 Remote Device Powering Methods.....22
8.7.8 Surge Arrestors 23
8.7.9 Entrance Conduits and Terminal Blocks.....23
8.7.10 Low Voltage Conduits & Distribution.....24
8.7.11 Station Telephone Distribution.....24
8.7.12 Equipment Racks & Cable Tray Assembly 24
8.7.13 Cable Tray Structure 24
8.7.14 Ancillary Equipment 25
8.7.15 Communication Room Size.....25
8.7.16 Environmental 25
8.7.17 Grounding.....25
8.7.18 Wayside Facilities.....26
8.7.19 Station Facilities 26

8.8 COMMUNICATION CABLING GENERAL REQUIREMENTS.....29

8.8.1 General Considerations 30
8.8.2 Quality 30
8.8.3 Design Factors 31
8.8.4 Outside Plant Cabling 31
8.8.5 Station/Facilities 38

8.9 SYSTEM NOMENCLATURE AND CONVENTIONS.....39

8.9.1 Cable Labeling and Identification.....39
8.9.2 Cabling and Wiring Color Code Conventions 40

8.10 COMMON SOFTWARE ENVIRONMENT 40

8.10.1 General 40
8.10.2 Identity Management 41
8.10.3 DNS, DHCP and IP Address Management 41
8.10.4 Security 41
8.10.5 Remote Access 42
8.10.6 Monitoring and Alarming 42
8.10.7 Configuration Management 42
8.10.8 Software 42
8.10.9 Software Updates and Lifecycle 44
8.10.10 Logging, Big Data and Analytics 44

8.11 FARES SYSTEM 45

8.12 BUILDING MANAGEMENT SYSTEM (BMS) 45

8.12.1 BMS Definitions 46
8.12.2 Nomenclature General Structure 46
8.12.3 General Description 47
8.12.4 BMS Operation and Maintenance Manuals 49
8.12.5 BMS Equipment Requirements 49
8.12.6 Requirements for the BMS Monitoring and Control of Systems 50
8.12.7 Control Logic Software, Graphics and Alarming Requirements 54
8.12.8 Training 55
8.12.9 Documentation 55

8.13 CCTV 55

8.13.1 Applicable Codes, Standards, Regulations and Practices 55
8.13.2 Product Acceptability 56
8.13.3 Naming conventions 56
8.13.4 Architecture 56
8.13.5 Archiving - Video Archiver Servers 79
8.13.6 Multicast Scheme 80
8.13.7 Alarm Connections 80
8.13.8 Monitoring and Alarming 80
8.13.9 Remote Management and Access 82
8.13.10 Cameras & Programming 83
8.13.11 Required site coverage / CCTV Camera Views 105
8.13.12 Cabling methods 108
8.13.13 Camera Poles 109

8.14 PA/VMS 109

8.14.1 General 109
8.14.2 Existing PA/VMS System 109
8.14.3 Applicable Codes, Regulations and Standards 111
8.14.4 Functional Requirements 111
8.14.5 Location Considerations 112
8.14.6 System and Component Design Requirements 112
8.14.7 Interfacing Requirements 114
8.14.8 Amplifiers 115
8.14.9 Signs 115
8.14.10 Installation and Design of Signs 116
8.14.11 Naming Conventions 117
8.14.12 Microphones 117
8.14.13 Integration to the Central Phone System 117

8.15 TELEPHONE SYSTEMS 117

8.15.1 General 117
8.15.2 Functional and Phone Equipment Requirements 117
8.15.3 Naming conventions 118
8.15.4 Extension convention 118
8.15.5 Monitoring of devices 118
8.15.6 Automated Device Testing 118
8.15.7 Integration to PA/VMS 118
8.15.8 Redundancy 118
8.15.9 Phones 119
8.15.10 Phone System Cabling Methods 120
8.15.11 Phone System Powering Methods 121
8.15.12 Phone programming 121
8.15.13 Central management of all help phone devices 121
8.15.14 Enclosures, Panels and Backboards 121
8.15.15 Call recording 121
8.15.16 Camera Behavior with Help phones 122
8.15.17 Caller ID conventions 122
8.15.18 Distribution Design Requirements 122

8.16 RADIO SYSTEMS 122

8.16.1 General 122
8.16.2 Portable radios 123
8.16.3 Mobile Radios 124
8.16.4 Installation standards 124
8.16.5 Tunnel Radio system 124
8.16.6 Industry Specs for all devices 124
8.16.7 Network connection to AFRRCS 125
8.16.8 Redundancy 125
8.16.9 Console Programming 126
8.16.10 Call recording 126
8.16.11 Monitoring of devices 126
8.16.12 Talk groups 126
8.16.13 DAS 127
8.16.14 BDAs 127
8.16.15 Radiax and installation 128
8.16.16 Coax and installation 128
8.16.17 Coverage expectations 129
8.16.18 Ground Level Stations (including terrestrial coverage) 129
8.16.19 BER measurements 129
8.16.20 Radio System Replacement 129

8.17 SIGNALS NETWORK 130

8.17.1 Conventions 130
8.17.2 Architecture 130
8.17.3 Device requirements 130
8.17.4 Redundancy 130
8.17.5 Monitoring of Devices 130
8.17.6 Signals Fibre Backbone 130

8.18 TRACTION POWER NETWORKS 131

8.18.1 EPCOR RACIs 131
8.18.2 Architecture 131
8.18.3 Naming conventions 131
8.18.4 Transfer Trip 131

8.18.5 SCADA control 131
8.18.6 Redundancy 131
8.18.7 Device requirements 131
8.18.8 Traction Power Fibre Backbone 131
8.18.9 Monitoring of Devices 132
8.18.10 Optical Isolation 132

8.19 OTHER SUBSYSTEMS 132

8.19.1 Card Access System 132
8.19.2 Public Wi-Fi 132
8.19.3 Third Party Advertising 133
8.19.4 Third Party Connectivity 133

8.20 TESTING AND COMMISSIONING 134

8.20.1 Installation, Testing, Manuals, and Training 134
8.20.2 Testing and Inspection of Equipment and Systems 135
8.20.3 System Demonstration 135
8.20.4 Final Inspection for Completion of Contracts 136

8.21 RECORD DOCUMENTS 136

8.21.1 Project Record Drawings 136
8.21.2 Operation and Maintenance Manuals 137

8.22 GENERAL EQUIPMENT AND SPARING 138

9.0 STRUCTURES 1

9.1 GENERAL 1

9.1.1 Introduction 1
9.1.2 Applicable Codes, Standards, Practices and Reference Guidelines 1
9.1.3 Structure Categories 2
9.1.4 Load Factor Method for Design 2
9.1.5 Application of Loadings 2

9.2 BRIDGES 3

9.2.1 Dead Loads 3
9.2.2 Live Loads 4
9.2.3 Vertical Loads 4
9.2.4 Horizontal Loads 4
9.2.5 Derailment Loads 5
9.2.6 Longitudinal Forces Due to Acceleration/Deceleration and Rail Restraint 5
9.2.7 Centrifugal Forces 5
9.2.8 Vehicle Collision Loads 6
9.2.9 Vibration and Deflection Control 6
9.2.10 Fatigue 6
9.2.11 Thermal, Wind, Snow, Shrinkage, Creep Loading Considerations 6
9.2.12 Related Structural Considerations 6
9.2.13 Inspection and Maintenance Manual 7

9.3 BUILDINGS 8

9.3.1 Loads and Forces 8
9.3.2 Related Structural Considerations for Type II and Type III LRT Stations 8

9.4 RETAINING STRUCTURES 8
9.4.1 Loads and Forces and Related Considerations 8
9.5 EARTH EMBANKMENTS 9
9.6 NOISE ATTENUATION WALL 9
9.7 UNDERGROUND STRUCTURES 9
9.7.1 General 9
9.7.2 Type I Stations 10
9.7.3 Tunnels 10
9.7.4 Shafts and Cross-Connections 12
9.7.5 Cut and Cover 13
9.7.6 Portals 14
9.7.7 Temporary Live Loads 15
9.8 POTENTIAL IMPACTS ON STRUCTURES AND FACILITIES 15
9.8.1 Support General Requirements 15
9.8.2 Support Methods 16
9.9 STRUCTURAL REQUIREMENTS FOR CONSTRUCTING LRT TRACKS OVER EXISTING UNDERGROUND STRUCTURES 17
9.10 PRIVATE DEVELOPMENT OVER EXISTING LRT UNDERGROUND STRUCTURES 17
9.11 PRIVATE DEVELOPMENT UNDER EXISTING LRT TRACKS 18

10.0 STATIONS AND ANCILLARY FACILITIES 1
10.1 GENERAL 1
10.1.1 Introduction 1
10.1.2 Applicable Codes, Standards, Policies and Reference Guidelines 1
10.1.3 Definitions 2
10.2 DESIGN PRINCIPLES 4
10.2.1 General 4
10.2.2 Interchange Function 4
10.2.3 Accessibility 5
10.2.4 Fare Payment 5
10.2.5 Passenger Safety and Security 5
10.2.6 Architectural 6
10.2.7 Lighting 6
10.2.8 Artwork 6
10.2.9 Landscaping 6
10.3 STATION SITE, CIRCULATION AND ACCESS 7
10.3.1 Location 7
10.3.2 Access and Egress 7
10.3.3 Emergency Egress/Exiting 8
10.3.4 Vertical Circulation 11
10.4 STRUCTURES AND SHELTERS 15
10.4.1 Platform 15

10.4.2 Roofs 19
10.4.3 Sheltered Enclosures 20
10.4.4 Service Area/Room Requirements 21
10.4.5 Transit Centre Facility 25

10.5 FARE COLLECTION EQUIPMENT 25

10.5.1 General 25
10.5.2 Fare Equipment Types 25
10.5.3 Fare Equipment Placement 27
10.5.4 Central Data Collection and Information System 27
10.5.5 Interfacing Requirements 28
10.5.6 Power Supply 28
10.5.7 Conduit, Cabling Requirements 28
10.5.8 Anchorage Requirements 28
10.5.9 Design References 29

10.6 STATION AMENITIES 29

10.6.1 Artwork 29
10.6.2 Concession Booth or Kiosks 30
10.6.3 Vending and Electronic Equipment 30
10.6.4 Pay Telephones 31
10.6.5 Furniture Items 31
10.6.6 Bicycle Racks 32

10.7 SIGNAGE AND BRANDING 32

10.7.1 Types of Signage – Summary 32
10.7.2 Branding 33

10.8 STATION ELECTRICAL 34

10.9 STATION MECHANICAL 34

10.10 COMMUNICATIONS 34

10.11 MATERIALS AND FINISHES 34

10.11.1 Design Objectives 35
10.11.2 Basic Materials 36
10.11.3 Colour 38
10.11.4 Finishes 38
10.11.5 Specialties 41
10.11.6 Doors and Windows 42
10.11.7 Hardware 45
10.11.8 Gates (Type I and II Stations) 46
10.11.9 Office Furnishings 46

10.12 THERMAL AND MOISTURE PROTECTION 47

10.12.1 Type I Roof Structures 47
10.12.2 Type I and Type II Station Walls 47
10.12.3 Above Grade Structures (Type I Entranceways, Type II and III Roofs) 47
10.12.4 Drainage 48

10.13 ADVERTISING 48

10.13.1 General 48
10.13.2 Location Criteria 49
10.13.3 Advertising Panel Frames 49
10.13.4 Lighting 49

10.13.5 Digital Display 49
10.13.6 Maintenance and Performance Criteria 49
10.13.7 Future Requirements 49

10.14 STREETS DESIGN 49

11.0 ELECTRICAL SYSTEMS 1

11.1 GENERAL 1

11.1.1 Introduction 1
11.1.2 Abbreviations 1
11.1.3 Applicable Codes, Regulations, Standards, Practices, Reference Guidelines 1

11.2 SYSTEM LOADS 2
11.2.1 Demand Factors 2
11.2.2 Traction Power 3

11.3 SYSTEM POWER CHARACTERISTICS 3

11.3.1 Utility Power Transmission 3
11.3.2 Systems Voltages 3
11.3.3 Capacity 3

11.4 SERVICES AND DISTRIBUTION 4

11.4.1 Supply to Signal and Communication Rooms 4
11.4.2 Panel Board Locations 4
11.4.3 ROW Maintenance Power 4

11.5 MATERIALS 4

11.5.1 Objectives 4
11.5.2 Identification 5

11.6 EQUIPMENT 6

11.6.1 Motors 6
11.6.2 Transformers 6
11.6.3 Disconnect Switches and Fuses 7

11.7 EMERGENCY POWER SYSTEMS 7

11.7.1 Manual Transfer Switch 8
11.7.2 Automatic Transfer Switch 8
11.7.3 Standby Rated Fixed Mounted Generators 8
11.7.4 Portable Generators 10

11.8 ELECTRICAL HEAT TRACE SYSTEMS 11

11.8.1 General Requirements 11
11.8.2 Cables 11
11.8.3 Control Panels and Accessories 11
11.8.4 Power Services 12
11.8.5 Snow and Ice Melt Systems 12

11.9 FIRE ALARM AND DETECTION 12

11.10 LIGHTING 13

11.10.1 General Design Objectives 13

11.10.2 Performance Standards 13
11.10.3 Standard Lighting Elements/Fixtures 13
11.10.4 Illumination Levels 14
11.10.5 Lighting Control Systems 16
11.10.6 Lighting Energy Conservation Measures 16
11.10.7 Emergency Lighting 16

11.11 METERING 17

11.11.1 Utility Metering 17
11.11.2 Distribution Equipment Metering 17

11.12 GROUNDING AND BONDING 17

11.12.1 Bonding 17
11.12.2 Ground Fault Protection 19

11.13 DUCTBANKS AND CONDUITS 19

11.13.1 General 19
11.13.2 Ductbank Construction General Requirements 22
11.13.3 Conduits and Raceways Additional Requirements 23

11.14 UTILITY SERVICES COORDINATION REQUIREMENTS 24
11.14.1 General 24
11.14.2 Exceptions 24

11.15 TESTING AND COMMISSIONING 25

11.16 STANDARD RECORD DOCUMENTS 25

12.0 MECHANICAL SYSTEMS 1

12.1 GENERAL 1

12.1.1 Introduction 1
12.1.2 Applicable Codes, Regulations and Standards and Reference Guidelines 1
12.1.3 Definitions 1

12.2 GENERAL DESIGN GUIDELINES 1

12.3 MECHANICAL SYSTEM COMPONENTS 2

12.3.1 Piping Systems 2
12.3.2 Other Insulation Requirements 7
12.3.3 Equipment 7
12.3.4 Vacuum System 9
12.3.5 Plumbing Fixtures and Trim 10

12.4 FIRE PROTECTION SYSTEMS 10

12.4.1 General 10
12.4.2 Standpipe Fire Hose Systems 11
12.4.3 Sprinkler System 12
12.4.4 Fire Extinguishers 12

12.5 HEATING 13

12.6 VENTILATION & SMOKE CONTROL 13

12.6.1 General 13
12.6.2 Ventilation and Heating Criteria 14

12.6.3 Ventilation Equipment 15
12.6.4 Alarms and Controls....16
12.6.5 Metering (Water and Gas)....16

12.7 DRAINAGE 16

12.7.1 General....16
12.7.2 Design Criteria....16
12.7.3 Drains 18
12.7.4 Pumping Stations 18

12.8 COMMISSIONING AND TESTING....18

12.9 PREVENTATIVE MAINTENANCE 18

12.10 MECHANICAL SYSTEMS STANDARD DOCUMENTATION REQUIREMENTS 19

13.0 CORROSION AND STRAY CURRENT CONTROL 1

13.1 GENERAL 1

13.1.1 Introduction....1
13.1.2 Definitions....1
13.1.3 Scope 2
13.1.4 Objectives....2
13.1.5 Applicable Codes, Standards and Reference Documentation....2
13.1.6 Corrosion Protection Specialist Services 3

13.2 SOIL AND WATER CORROSION CONTROL 3

13.2.1 Materials of Construction 3
13.2.2 Safety and Continuity of Operations 3
13.2.3 Accessibility of Installations....3
13.2.4 Special Considerations 3
13.2.5 Materials and Methods....3
13.2.6 LRT Fixed Facilities....5

13.3 STRAY CURRENT CORROSION CONTROL 6

13.3.1 Traction Power System 7
13.3.2 LRT Fixed Facilities....8
13.3.3 Facilities Owned by Others 13

13.4 MISCELLANEOUS CORROSION CONTROL CONSIDERATIONS (COATINGS) ...14

13.4.1 General Requirements 14
13.4.2 Metallic-Sacrificial Coatings 14
13.4.3 Organic Coatings....14
13.4.4 Conversion Coatings....14
13.4.5 Ceramic-Metallic Coatings (Cermets) 14
13.4.6 Sealants 15
13.4.7 Barrier Coating System 15

14.0 IMPACT MITIGATION, AESTHETICS, ROW CONTROL 1

14.1 GENERAL 1

14.1.1 Scope 1
14.1.2 Bylaws, Standards, Practices, Guidelines, References 1

14.2 LRT IMPACTS AND ABATEMENT MEASURES 1

14.2.1 LRT Impacts 1
14.2.2 Community Standards Bylaw 2
14.2.3 Abatement Techniques 2

14.3 AESTHETIC CONSIDERATIONS 3

14.3.1 General 3
14.3.2 Landscape Design Principles 3
14.3.3 Landscape Design Reference Documents 6
14.3.4 Architectural Requirements 6

14.4 ROW ACCESS CONTROL AND PROTECTION 6

14.4.1 Fencing 6
14.4.2 Signage 7

15.0 ACCESSIBILITY 1

15.1 GENERAL 1

15.1.1 Introduction 1
15.1.2 Abbreviations, Acronyms 1
15.1.3 Definitions 1
15.1.4 Applicable Codes, Standards, Practices 2
15.1.5 Design References 2
15.1.6 Accessibility Features/ABC References 2

15.2 ACCESSIBILITY POLICIES 2

15.2.1 Policy C463 – Accessibility to City of Edmonton Owned and Occupied Buildings 3
15.2.2 ETS Accessible Transit Instruction 4
15.2.3 Stakeholder Groups 5

15.3 LRT STATION DESIGN 5

15.3.1 Accessibility Principles 5
15.3.2 Interior Accessible Routes 5
15.3.3 Platform, Public Areas and Amenities 10

15.4 STATION EXTERIOR AREAS 13

15.4.1 Exterior Accessible Routes 13
15.4.2 Passenger Loading Zones 14
15.4.3 Parking Lots 15

15.5 TRANSIT CENTRES 15

15.6 SAFETY AND SECURITY 15

16.0 SAFETY AND SECURITY 1

16.1 GENERAL 1

16.1.1 Introduction 1

16.1.2 Abbreviations, Acronyms, Definitions....1
16.1.3 Applicable Codes, Standards, Regulations, Design References....1

16.2 SAFETY AND SECURITY GENERAL PRINCIPLES AND GUIDELINES....2

16.2.1 Safer City Principles and Guidelines....2
16.2.2 General Guidelines for all Transit Facilities....2
16.2.3 LRT Facility Interior and Exterior Access Routes and Areas....3

16.4 LRT SYSTEM SAFETY AND SECURITY FEATURES....4

16.4.1 Surveillance....4
16.4.2 Stations/Facilities....6
16.4.3 Station Exterior Areas....8
16.4.4 LRT Right-of-Way....8
16.4.5 Light Rail Vehicles....9
16.4.6 Ownership, Maintenance and Management....10

17.0 UTILITIES....1

17.1 GENERAL....1

17.1.1 Introduction....1
17.1.2 Applicable Codes, Standards, Practices and Reference Guidelines....1
17.1.3 Ownership....2

17.2 GENERAL DESIGN GUIDELINES....3

17.2.1 All Utilities....3
17.2.2 Utilities Impacted by LRT Construction....3

17.3 RESPONSIBILITIES AND COORDINATION REQUIREMENTS....4

17.3.1 Process Overview....4
17.3.2 LRT Utility Design Consultant....4

17.4 NOTICE REQUIREMENTS....6

17.5 LRT UTILITIES....6

17.5.1 General....6
17.5.2 Utility Service Connection....6
17.5.3 Utility Placement At-Grade Trackway....6
17.5.4 Utility Placement in Underground Tunnels or Structures....6

18.0 STREETS DESIGN....1

18.1 GENERAL....1

18.1.1 Introduction....1
18.1.2 Abbreviations....1
18.1.3 Applicable Standards, Regulations, Practices, Guidelines....1
18.1.4 Plan Approval Procedure....2

18.2 STREET GEOMETRIC DESIGN....3

18.2.1 Medians....3
18.2.2 Private Crossings/Curb Cuts....3

18.2.3 On-Street Parking....3
18.2.4 Bus Loading Zones....3
18.2.5 Sidewalks/Walkways/Shared Use Paths /Boulevards....3
18.2.6 Curb Ramps....4
18.2.7 Landscaping....4
18.2.8 Street Lighting....4
18.2.9 Temporary/Detour Roads....4
18.2.10 Clearance Requirements (edge of road to LRT)....4

18.3 STREET CONSTRUCTION....4

18.3.1 General....4
18.3.2 Grade Crossings of the LRT Trackway....4

18.4 TRAFFIC CONTROL MEASURES....4

18.4.1 General....4
18.4.2 Crosswalks....4
18.4.3 Vehicular Access and Parking....5

18.5 LRT GRADE CROSSING SAFETY....5
18.5.1 General....5
18.5.2 Mitigation Measures....5
18.5.3 Evaluation Procedure....6
18.5.4 Road Crossings of Arterial Roadways....7
18.5.5 Protective Measures for At-Grade Pedestrian Crossings of Arterial Roads....7

18.6 STREETS DRAINAGE....8

18.7 STATION ACCESS....8

18.7.1 Access Modes....8
18.7.2 Vehicular Access....8
18.7.3 Surface Park and Ride Lots....9

18.8 EMERGENCY AND MAINTENANCE VEHICLE ACCESS....11

18.9 TRANSIT CENTRES....11

18.10 FENCING....12

19.0 PARKADES....1

19.1 GENERAL....1

19.1.1 Introduction....1
19.1.2 Abbreviations and Definitions....1
19.1.3 Applicable Codes, Standards, Practices, and Reference Guidelines....1

19.2 FUNCTIONAL DESIGN OF PARKADES....2

19.2.1 Usage Projections....2
19.2.2 Required Level-of-Service....2
19.2.3 Accessibility for Persons with Disabilities....2
19.2.4 Emergency Access....2
19.2.5 Street Access....3
19.2.6 Access Control Devices....3
19.2.7 Above vs. Below Ground Structure....3
19.2.8 Vehicular Circulation....4

19.2.9 Parking Geometry and Layout 4
19.2.10 Pedestrian Circulation 5

19.3 BUILDING REQUIREMENTS 6

19.3.1 Classification 6
19.3.2 Required Service Areas 6
19.3.3 Architectural Finishes and Landscaping 6
19.3.4 Mechanical Requirements 7
19.3.5 Electrical Requirements 7
19.3.6 Communication Requirements 7
19.3.7 Structural Requirements 7
19.3.8 Drainage 8
19.3.9 Maintenance and Operation Considerations 8

19.4 SECURITY 9

19.4.1 Safety Audit 9
19.4.2 Passive Security 9
19.4.3 Active Security 10

19.5 SIGNAGE, GRAPHICS, AND PAVEMENT MARKINGS 12

19.5.1 General 12
19.5.2 Signage 12
19.5.3 Graphics and Painting 12
19.5.4 Pavement Markings 12

LRT DESIGN GUIDELINES

Chapter 1

2017 EDITION – Revisions Tracking Form

Section	Reference	Revision General Description	Issue Date
1.1.1	3rd paragr.	Changed reference to previous 2011 version, updated during construction of NLRT.	July 2017
1.1.2	Bullet list	Updated chapter titles	
1.1.7	Section	Updated system description	
Appendix	Appendix II	Updated reference to 2011 LRT Design Guidelines. Updated website pathways.	

1.0 GENERAL

		Page
1.0	**GENERAL**	**1**
1.1	INTRODUCTION	1
1.1.1	Purpose	1
1.1.2	Scope	1
1.1.3	Procedures and Application	2
1.1.4	Abbreviations, Acronyms	3
1.1.5	Project Management	3
1.1.6	Sustainable Building Policy	4
1.1.7	Background	4
1.2	GENERAL DESIGN PHILOSOPHY	5
1.2.1	Public Involvement	5
1.2.2	Land Use	5
1.2.3	Aesthetics/Arts Program	6
1.2.4	Accessibility	6
1.2.5	Safety and Security	6
1.2.6	Operation and Maintenance	7
1.3	LOCAL CLIMATIC CONDITIONS	8
1.4	VALUE ENGINEERING/RISK MANAGEMENT	9
1.5	SAFETY MANAGEMENT AUDIT PROGRAM	9
1.6	COMMISSIONING AND TESTING	10
1.6.1	General	10
1.6.2	Activation	10
1.6.3	Overhead Catenary System Certification	10
1.7	STANDARD RECORD DOCUMENTS	11
1.7.1	Plan of Record Drawings General Requirements	11
1.7.2	Operation and Maintenance Manuals General Requirements	12
1.7.3	Other Documentation Requirements	20

List of Figures

Figure 1.1 – Cover & Spine Layout for O & M Manual

List of Appendices

Appendix I – Standard Record Documents Additional Requirements

Appendix II – Website Links to Prime Reference Documents

1.0 GENERAL

1.1 INTRODUCTION

1.1.1 Purpose

The LRT Design Guideline manual is prepared to provide information and direction to the City of Edmonton staff, consultants, and contractors who are involved in the design of Edmonton's LRT system. It outlines standards governing the designs of various elements on Edmonton's LRT System. In addition, project-specific drawings standards, CADD standards, Design Briefing Reports and a Quality Assurance / Quality Control Manual must be prepared, and adhered to during the engineering and construction phases of LRT projects.

In addition to the forgoing, other specific guideline and standards documents have been prepared to guide the design activities and the preparation of contract documents and are referenced throughout this manual. Requests for these documents should be directed to the Project Office.

The last update to the Design Guidelines was completed in 2011, referred to as the 2011 edition. This update reflects design issues and variances that were addressed during the construction phase of the NLRT extension to NAIT.

Designs should be conceived within an atmosphere of fiscal responsibility. Designs should be guided in maintaining low operating costs, minimizing capital costs (i.e.: design, construction, mitigation, aesthetics…), and minimizing public and community disruption. These requirements must be balanced with the need to ensure public safety and access, environmental impacts, system reliability, and maintenance requirements.

1.1.2 Scope

This chapter provides general background on past LRT development in Edmonton, outlining the collaborative approach to be taken on LRT plan development. It also presents the general design philosophy and principles that guide the planning, design, and construction of the LRT System. In addition, it provides an overview of the commissioning process associated with making a newly constructed segment operational, and details of project closeout document requirements (plan of record drawings and operating and maintenance manuals).

In addition to this chapter there are eighteen (18) specific design component chapters as follows:

- Vehicles
- Clearances and Right-of-Way
- Track Alignment
- Trackwork
- Traction Power
- Signals
- Communications & Control
- Structures
- Stations and Ancillary Facilities
- Electrical Systems
- Mechanical Systems
- Corrosion and Stray Current Control
- Impact Mitigation, Aesthetics and ROW Control
- Accessibility
- Safety and Security
- Utilities
- Streets Design

- Parkades

Where appropriate, each chapter is supported by figures, diagrams, and tables at the end of each chapter. In some instances, applicable reference documentation will form an appendix to the chapter. Each chapter is to be as comprehensive and complete as possible. Notwithstanding the forgoing, due to the complexity of the topics, specific referencing to other chapters or other related reference documents still occurs throughout a chapter.

It is the intent of the City to also develop design guidelines for LRT Shop and Yard facilities for inclusion in this document at a later date.

1.1.3 Procedures and Application

The material contained in the following chapters provides a uniform basis to direct the Consultant's design. The intent, however, is not to restrict Consultant from exploring new ideas, concepts and the application of new technologies. Also, through the design process, some refinement is to be expected. The guidelines do not substitute for sound engineering judgment and practice.

The Consultant is responsible for identifying any proposed departures from the guidelines stated within this manual. A Design Guideline Variance Request must be provided by the Consultant to explain, and justify, any deviation from these guidelines and secure all the necessary approvals. Any proposed changes must first be reviewed by the Project Manager and have the written approval of the City of Edmonton prior to use in design.

1.1.3.1 Mandatory vs. Non-Mandatory

These Guidelines include both mandatory requirements and guidance or non-mandatory recommendations. Application of the guidelines is to be based on the use of the following terminology:

- "**must"** – denotes a mandatory requirement.
- "**should" –** denotes a recommended, but non-mandatory requirement, whose application depend upon analysis and particular circumstances.
- **"may"** – denotes an optional requirement.

1.1.3.2 Codes and Standards

It is the intent of the City of Edmonton Transportation Services Department, Edmonton Transit System, and the Infrastructure Services Department that all work be performed in compliance with all current local, provincial, and/or federal codes and standards. Where expressed differences between the various codes and standards occur, compliance with the highest standard must be adhered to, unless otherwise directed by the local *authority having jurisdiction.

***Note: Authority having Jurisdiction** (AHJ). A safety codes officer in the building discipline exercising authority pursuant to designation of powers and powers and terms of employment in accordance with Section 28 of the Safety Codes Act. The individual certified as a safety codes officer is given designated powers by the Safety Codes Council.

All applicable codes and standards are listed in each chapter.

1.1.3.3 Facility Development Review

It is a legal requirement that all facility designs be approved by the City of Edmonton, Planning and Development Department.

The formal approval procedure by the Planning and Development involves two stages:

- Development Permit application and approval, which is usually coordinated through the City's representative.

- Approval of the detailed design and the issuance of a building permit. The contract documents generally stipulate that the Contractor is for applying for and obtaining the building permit.

It is recommended that an informal process also be followed. This should take the form of on-going consultation with the Planning and Development – Safety Code Section, Plan Examiners during the detailed design phase to deal with issues as they arise during the design development. The objective of the informal process is to ensure that the issuance of the building permit is more or less a formality and should minimize the requirement for changes during and after the facility contract award. An appropriate number of drawings and specifications will be provided by the PMO.

1.1.4 Abbreviations, Acronyms

The following abbreviations and acronyms appear throughout these Guidelines. Other abbreviations or acronyms that are used will be stated in their respective chapters.

ABC	Alberta Building Code
ASHRAE	American Society of Heating, Refrigeration and Air Conditioning Engineers
*APTA	American Public Transportation Association
IS	Infrastructure Services
CADD	Computer Aided Design & Drafting
City	City of Edmonton (the Owner)
DBM Bridge	Dudley B. Menzies Bridge
ETS	Edmonton Transit System (a branch of the City Transportation Services Department and operator of the LRT system)
LEED	Leadership in Energy and Environmental Design
LRT	Light Rail Transit
LRT D&C	LRT Design and Construction (a branch of the Transportation Services Department - the City's designated representative during the design and construction of LRT extension projects)
LRV	Light Rail Vehicle (sometimes referred to as "car")
NBC	National Building Code of Canada
O & M	Operating and Maintenance
POR	Plan of Record
PO	Project Office
PM	Project Management
QA/QC	Quality Assurance / Quality Control
ROW	Right-of-Way
SD	Siemens Duewag
SC	Specialist Consultant
SUP	Shared Use Paths
TOR	Top of Rail
VMS	Variable Message System

Note: *APTA was created in 1974 with the merging of the American Transit Association (ATA) and the Institute for Rapid Transit (IRT). In January 2000, the name of the organization was changed to American Public Transportation, still retaining the same acronym APTA.

1.1.5 Project Management

For any new LRT project extension there are numerous project management and project delivery strategies that could be employed, depending upon the size, timelines, desired contractual relationships, and staffing requirements. It is the City's objective to provide an effective project organizational structure that uses Project Management best practices based on the Project Management Body of Knowledge and City of Edmonton policies and guidelines.

The LRT Project Office is accountable to the City through the LRT D & C acting on behalf of ETS, as the operator of the LRT system.

1.1.6 Sustainable Building Policy

In June of 2007 City Council adopted Sustainable Building Policy #C532 – Leadership in Energy and Environmental Design (LEED Silver) which states as follows:

> "The City of Edmonton is committed to environmental, economic and social Stewardship of City owned buildings and facilities and continues to demonstrate environmental leadership in the community. Effective January 1, 2008, all City-owned buildings and major renovations will be designed and constructed to meet LEED *Silver Standard as a minimum, and be formally LEED certified".

Note: LEED provides a complete framework for assessing building performance and meeting sustainability goals. Based on well-founded scientific standards, LEED emphasizes state of the art strategies for sustainable site development, water savings, energy efficiency, materials selection and indoor environmental quality. The LEED Green Building Rating System™ is a voluntary, consensus-based national standard for developing high-performance, sustainable buildings.
In LEED, for new construction and major renovations for commercial buildings, there are 69 possible points and buildings can qualify for four levels of certification. Silver is the second level of certification (33-38 points). It should be noted however that LRT Stations are not considered to be buildings under the LEED Policy. However, the overall LRT project should strive to meet sustainability goals using best practices.

1.1.7 Background

At the time of publication of the 2017 Edition of the Design Guidelines Edmonton's LRT system included two lines:

Capital Line

The Capital Line with 21 km of double track providing access between Clareview (139 Avenue and 43 Street) and Century Park at 111 Street just north of 23 Avenue.

On the north side the surface portion of the alignment is 7.8 km in length and predominately runs in the CN ROW from Clareview toward the City's downtown core. From 95 Street underground alignment, (including the DBM Bridge), is 4.7 km long and travels under the downtown area, across the river on the DBM Bridge to the underground University Station.

The section south of the University Station is comprised of 390 m of tunnel, 120 m of portal and 200 m of surface alignment (including station approaches) coming back to grade at Health Sciences Station just north of 83 Avenue on the west side of 114 Street.

South of Health Sciences the line (8.1 km in length) is predominately at-grade to Century Park. Grade separations with roadways are provided at Belgravia Road (underpass), with the southbound lanes of 111 Street south of 61 Avenue (underpass) and an overpass of Whitemud Drive on 111 Street.

There are fifteen stations along the 21 km route provide access for LRT patrons to the LRT trains.

Metro Line

The Metro Line is a 3.3 km double track extension which diverges from the Capital Line at Churchill Station and continues to NAIT where it terminates just north of Princess Elizabeth Avenue.

North of Churchill Station the Metro Line is underground in twin tunnels for 600 m before coming to grade through the portal east of MacEwan Station. From MacEwan to NAIT Stations, the line runs at grade.

There are three stations on the Metro Line.

The system operates with a fleet of 94 LRV's and has an average weekday rider-ship of 74,000 patrons.

1.2 GENERAL DESIGN PHILOSOPHY

1.2.1 Public Involvement

The implementation of LRT impacts a broad range of stakeholders. For this reason, public involvement has been recognized as a major and critical component of LRT expansion. The public involvement effort is led by the City in conjunction with the Project Team. In accordance with City Policy C513 a Public Involvement Plan must be created and implemented for the planning and design phases of all LRT extension projects. During construction, the focus shifts to public communications, and a specific public involvement plan is not required.

The overall goal of public involvement is to ensure an exchange of information between affected residential, institutional and corporate communities, and the project team. Public involvement will serve to facilitate appropriate, ongoing dialogue between many diverse internal and external stakeholders during the planning and design process.

This process will enable the project team to effectively integrate the public involvement process in the project framework and to respond to the three major challenges:

- Involving the appropriate people, in the appropriate way, at the appropriate time.
- Sustaining broad-based and balanced community commitment to a long-term project.
- Ensuring that the stakeholder involvement process is responsive to emerging situations and issues, and enables new voices to be heard.

1.2.2 Land Use

Incorporation of LRT into residential areas requires initiative by the Consultant Team to mitigate stakeholder concerns, while maintaining the integrity of pre-established urban themes, traffic (vehicular and pedestrian) movement, and land use bylaws. Some stakeholder concerns typically include, but not limited to; noise, vibration, safety, appearance of LRT elements (tracks, retaining walls, gates, catenary…), access, social/business impacts, construction, and temporary and future traffic circulation.

Revisions may be required to Neighborhood Area Structure Plans to incorporate proposed LRT extensions. This will be initiated by the City.

Through the planning and design process, Consultants must:

- Ensure the overall safety of passengers, operators, pedestrians, vehicular traffic, and general public is maintained.
- Utilize low maintenance landscaping to reduce long-term costs, while providing an enduring landscape.
- Identify and reflect the character of the community it moves through.
- Minimize the need to replace or relocate existing buildings and structures.
- Maintain, facilitate, and/or enhance pedestrian and vehicular movement within the community.
- Utilize landscaping and structures design in mitigation of noise, appearance, safety, and community integration, to provide a system that is both attractive and visually pleasing to the general public.
- Development must be fiscally responsible in an effort to minimize impacts while maximizing the value received in a fiscally responsible manner.
- Land use and landscape development must incorporate each unique community's issues as determined through the stakeholder involvement process.

In response to the development of the overall principles outlines in Section 1.2.1 seven major landscaping design principles were formulated and will be incorporated into the landscaping development of the LRT corridor and its components. These are; (1) safety, (2) maintenance, (3) neighborhood integration and impact mitigation, (4) buffering, (5) aesthetics, (6) fiscal responsibility, and (7) stakeholder involvement..

1.2.3 Aesthetics/Arts Program

City Policy C458C, outlines the guidelines by which public art is to be included in the project budget and the means by which it is to be incorporated. It states in part:"

> "The City of Edmonton will dedicate 1% of the qualifying construction budget to cover the costs of implementing City Policy C458C."

In part, the purpose of the policy is to "Improve the livability and attractiveness of Edmonton: increase public awareness and appreciation of the arts; stimulate the growth of the arts and arts-related business, use public are to help meet urban design objectives of municipal developments; and to encourage public art in private developments through example."

1.2.4 Accessibility

Barrier-free design will be undertaken for all sites and as determined by the stakeholder involvement process. The design must utilize the following documents or resources to ensure a barrier-free design:

Barrier-Free Design Guide - Barrier-Free Design Advisory Committee of the Safety Codes Council and Alberta Municipal Affairs.
Universal Design for Barrier - Free Park Development, City Community Services,
Policy C463 – Accessibility, City Corporate Guide.
City of Edmonton Advisory Board on Services for Persons with Disabilities.

Refer to Chapter 15 – Accessibility for further details. Specific accessibility issues are also noted with the various chapters as deemed appropriate.

1.2.5 Safety and Security

1.2.5.1 Design and Operations

Safety and security in LRT facilities and along the corridor and adjacent communities is a major concern. High visibility of all areas is required for both a feeling of public safety and to ensure adequate operational site lines are maintained.

All Consultants must incorporate the criteria stated in the following documents to ensure a safer corridor is developed for vehicular, pedestrian, bicyclists, and LRT users:

Crime Prevention Through Environmental Design (CPTED)
City of Edmonton Design and Construction Standards
Design Guide for a Safer City, City Planning and Development Department.
LRT Safety and Security Guidelines (Refer to Chapter 16, Safety and Security)

Formal Road Satety Audits should be considered during the design phase to address the safety of all system users, including riders, pedestrians, and motorists along the LRT right-of-way.

1.2.5.2 Security During Construction Phase

Theft and vandalism of construction materials/equipment stored on-site or even after installation and prior to LRT operations is a growing problem and is a major concern to the City of Edmonton.

Consultants should incorporate in their designs practical and cost effective theft prevention measures. They should ensure that the security provisions of construction specifications are stringent. Regular and frequent inspections of Contractors laydown/work areas must be carried out to ensure that stored materials and equipment are properly secured.

1.2.6 Operation and Maintenance

LRT facilities represent a major investment and are difficult to change or modify once built. The objective in the facility design is to provide a long functional life (75 to 100 years plus) with a minimum of maintenance requirements. Consideration must be given to minimizing service disruption and inconvenience to the transit patron during maintenance procedures, renovations or new construction tie-ins. The Consultant must consider the following principles during the design development phase of his work:

1.2.6.1 Maintenance

- The use of conservative design procedures.
- The use of materials and products especially designed or suited for heavy usage is required.
- As a general rule, simple, standard, off-the shelf high quality components are preferred to complex or elaborate building components that are prone to higher incidence of failure and require more maintenance.
- The design of the facility will be such as to make any maintenance procedures as convenient as possible to carry out.
- Use materials and equipment that are waterproof and able to withstand water penetration.
- Provide utility services at the station exterior to accommodate the maintenance of landscaped areas.
- Minimize or eliminate bird roosting areas in outdoor stations.

1.2.6.2 Personnel and Equipment Access

- As access to portions of underground structures is difficult or impossible, it is a major consideration in the design. Safe and convenient access must be provided to all facility areas except the roofs of at grade facilities.
- Easy access must be provided where required to easily perform maintenance procedures including the servicing of lighting installations.
- Lifting hooks and access platforms must be provided to assist in the removal of heavy items of equipment, e.g. pumps, motors, filters, etc.
- The facility design must take into account that emergency crews and firefighting crews have good access to all areas. Due consideration is to be made to escape modes and emergency access routes.
- Easy access to all portions of the LRT ROW should be provided, where practicable.
- Tie-off points on roofs and high structures to provide fall-protection measures for O & M crews.

1.2.6.3 Vandalism

- Facility design must incorporate measures to resist the attempts of wanton destruction and violent vandalism.
- The Consultant must maximize the use of vandal resistant materials and equipment, particularly in vulnerable public areas.
- Eliminate blind spots and hidden areas as much as possible.
- All structural ledges in public areas must be sufficiently sloped to discourage loitering and vandalism.

1.2.6.4 Flexibility

- The design of LRT structures should be able to accommodate possible future extensions, facility upgrades, equipment, and new uses (i.e. kiosks) that may be added to the system.
- Underground station design should be able to accommodate connections to future adjacent development.
- LRT tunnels should make provision for future turnouts.
- Service rooms should be sized to handle all necessary equipment plus an allowance for the possibility of future equipment being added.
- Sufficient capacity should be provided to handle additional electrical loads.
- The design will allow for alternate access in the event of closure of escalators, elevators, entrances etc. for station maintenance or upgrades.
- Accommodate snow removal and storage adjacent to LRT facilities and ROW.

The degree of flexibility to be incorporated will be at the discretion of the ETS.

1.2.6.5 Combustibility

- Due to restrictive locations of underground stations, extreme care and consideration should be taken in the selection of materials and finishes.
- Combustible elements within the facility are to be minimized.

1.2.6.6 Collaboration

- Comprehensive and continual consultation is required with ETS during the design construction and commissioning phases of the project.
- Comprehensive consultation is required with the Advisory Board for Persons with Disabilities during the design and commissioning phases of the project.
- City Departments or agencies involved in the maintenance of LRT facilities must be involved in design development reviews and the commissioning phase of the project. In addition they are to be provided with POR plans and O & M documentation.

1.3 LOCAL CLIMATIC CONDITIONS

The City of Edmonton, the capital city of Alberta, is located about 3 hrs driving time east of the Rocky Mountains in central Alberta. It is situated 671 m above sea level at 53º 34’ north latitude and 113º 35’ west longitude (at the City Center Airport).

Edmonton has four distinct seasons and can experience a wide variation in temperature. Its warmest temperatures are normally experienced in July with daily means of 17.5º C with a record high temperature being achieved of 34.5º C on August 5, 1998. Average yearly rainfall is 365.7mm. The daily mean minimum temperature in January is -16ºC degrees with a record low temperature of -48.3ºC occurring Dec 28, 1938. Average yearly snowfall is 123.5mm.

The temperatures used for design purposes for Edmonton are to be in accordance with current ASHRAE and ABC standards.

The summer average relative humidity is 60% and the winter average humidity is 75%. Frequently throughout the year 100% relative humidity may be achieved. Minimums of 15% to 20% may also be experienced.

Winds average 12 km/h over the course of the year, however the highest wind velocity recorded on a 10 minute mean basis is 101 km/hr. Wind gusts up to 130 km/h may be experienced. In 1987 the eastern edge of Edmonton experienced a Category F4 tornado with major loss of life and property damage.

Generally air pollution levels are low. Alberta Environment should be consulted to determine if vehicle, equipment or weather sensitive infrastructure components have the potential of being damaged by abnormally high levels.

Note: Climatic conditions should be verified by accessing www.weatheroffice.ec.gc.ca/canada-e

1.4 VALUE ENGINEERING/RISK MANAGEMENT

ETS encourages design consultants to develop proven design alternatives to improve construction, operation and maintenance of the LRT system facilities. Alternative designs should be developed and evaluated taking into consideration the following criteria:

- Performance – proven materials
- Cost and schedule savings during construction
- Operating efficiency
- System safety
- Ease of maintenance
- Low maintenance

From time to time the PMO may require, with the assistance of the Consultant that a risk analysis assessment be carried out on certain problematic aspects of the LRT extension project.

1.5 SAFETY MANAGEMENT AUDIT PROGRAM

The purpose of the APTA developed and sponsored Safety Management Audit program is two-fold:

- To provide public transit properties such as ETS with transit industry-wide formats for developing a LRT System Safety Program Plan; and,
- To provide formal evaluations on how well those System Safety Programs have been met.

The goal of the program is to guide the transit property and the Consultant through a series of safety management processes that will strengthen and validate the quality of the transit agency's safety practices and create an even safer environment for users all those whom are in direct and indirect contact with the LRT system.

Such an audit was conducted by APTA on ETS in 2007. In addition to other audit findings APTA recommended that ETS consider the following enhancements:

- To increase their awareness of existing Rail Transit Standards, ETS's (Vehicle Maintenance, Operations, Facilities, Right-of-Way and Communications Maintenance) should review applicable standards and recommended practices and document how they conform or exceed those minimum standards.
- LRT should consider establishing an independent accountability of the Quality Assurance function within the organization to support the development and oversight of organizational-wide quality control practices. This function becomes more critical as the organization continues its service expansion.
- Some locations along the system right-of-way have been identified as not having sufficient clearance for personnel when trains are moving at those locations. No clearance zones protection training has been conducted to make personnel aware of the hazard in those areas. It is recommended that LRT take added safety awareness measures and clearly mark the affected areas in the field as no clearance zones.
- ETS should establish at least, a notation or Cover Page for its existing As-built drawings to designate the appropriate reference documents that have changed the original configuration.
- LRT is encouraged to complete its track standards development that will ultimately provide clear guidelines on how LRT track is maintained. This document will also be beneficial to its track training program.
- It is recommended that ETS establish a frequency of review for the existing Standard Operating Procedures (SOP).
- It is recommended that ETS continue their progress toward the conversion of as-built drawings to an electronic medium.

1.6 COMMISSIONING AND TESTING

1.6.1 General

A Commissioning Plan and Program will be developed for all extensions to the LRT system, including any major renovations to existing stations and related facilities.

Commissioning begins at the start of the project and correlates with the construction schedule. The commissioning program is designed to be flexible and responsive to each project and the user's needs. The commissioning agent also acts as an educator, as not all contractors, consultants, and building owners are fully familiar with the specific commissioning process and demands placed upon them to completely commission a building or a system.

The program philosophy incorporates the systematic static and dynamic testing of each system and its interrelated and interacting components. The testing activities are carried out within the framework of a clearly defined commissioning program. Participants are informed of their respective role and responsibilities. Each activity is performed until each system is proven capable of operating at an optimum condition. Specified contractor tests are to be witnessed by the Consultant. In addition, independent operational tests are to be conducted.

The commissioning routines involve an overlap of activities between the Consultant's and Contractors performing services under various contracts. This overlapping of activities creates a situation which requires a single source, one party, responsibility. A commissioning team, which will include representatives from the Consultant, LRT D&C, and ETS, will be established to monitor the activities carried out within the program structure and to deal with potentially problematic issues as they arise.

The commissioning program also includes City of Edmonton maintenance personnel (both ETS and Infrastructure Services Building Maintenance) when called upon. Involvement of the maintenance personnel and future building occupants in the commissioning, as part of the process and through training seminars, results in fewer problems, faster turnover, assured knowledge transfer, and a higher level of confidence in operating the systems.

The Commissioning Program does not limit or relieve the Consultant or Contractor of any specified contractual responsibilities or duties.

1.6.2 Activation

Start-up and activation work must be performed by an independent agency (referred to as the Activation Agent) approved by ETS.

The building mechanical system must be checked in both static and dynamic modes to ensure compliance with the design intent and the mechanical contract documents.

The Activation Agent:

- Reports directly to the Mechanical Consultant.
- Must complete his work prior to substantial completion being issued by the Contractor.

1.6.3 Overhead Catenary System Certification

Prior to the energization of the overhead catenary system, *Megger testing must be undertaken to identify leakage conditions and ensure the electrical integrity of the system.

***Note:** The traction power consultant must specify the test procedure.

A single LRV must be utilized to test the overhead contact wire system at test speeds designated by the Consultant. Initial test runs are to be conducted at slow speeds and successive test runs are to be performed with incremental increases in speed, at the discretion of the Consultant. The system must be fully tested at the maximum LRV operating speed.

The LRV must be equipped with camera equipment for monitoring the pantograph dynamic position relative to the stagger of the contact wire.

The operation of the system must be monitored after commissioning until the Consultant is satisfied that no deficiencies exist and no remedial actions are required.

1.7 STANDARD RECORD DOCUMENTS

As the Owner, the City requires detailed information on the constructed LRT facility for a variety of purposes. This information, referred to as Standard Record Documents, is generally comprised of the following:

- Plan of Record Drawings
- Operation and Maintenance Manuals
- Shop Drawings
- Guarantees / Warranties
- Project Closeout Records and Reports

The format, content and level of detail provided must be consistent with that provided for existing LRT facilities.

1.7.1 Plan of Record Drawings General Requirements

The responsible Contractor must accurately and neatly record any deviations from the contract documents (red lining) caused by site conditions and/or other authorized changes. The Contractor will provide a record of these changes to the Consultant on a regular basis. The Consultant is then responsible for ensuring that all changes that are made to contract components during construction are recorded on a set of drawings referred to as the “Plan of Record” drawings.

The POR drawings are a major deliverable item from the design/construction phase of the work, and are required to be produced before the work performed under the terms of the contract is accepted. They are provided to the Project Office and is presented in general terms in the following table:

Drawing Medium	Format	Distribution
Mylar	A1 -One set only in permanent ink	Project Office
Electronic (CD)	A1 pdf’s; autocad; *mircostation; reference files *As per direction from Project Offfice	1 – Project Office 1 – LRT D&C *Varies – ETS
Paper	A1 bond 11 X 17	2 sets – LRT D& C *Varies – ETS (varies according to number of facilities in project) 2 sets – LRT D & C 1 set – Project Office *Varies – ETS (For SLRT 22 sets were required)

Table 1.1

Notes:

1. CADD Manual updates to provide POR format and distribution prior to preliminary engineering on any extension project. *Variable distribution requirements to be verified by Project Office.
2. 11 x 17 *prints bound in a binder designated Plan of Record Drawings. The spine and front of the binder will contain the same information as described in Section 1.6.2.3 for the O & M Manuals.
3. There are instances whereby the POR (i.e. schematics) may be incorporated into the O & M manuals.
4. At the direction of LRT D&C additional sets of drawings and CD's for certain contracts may be required for institutional stakeholder groups.
5. POR drawings in electronic and paper format are to be submitted to ETS no later than 60 days after completion of construction.

1.7.2 Operation and Maintenance Manuals General Requirements

1.7.2.1 Purpose

Under the direction of the responsible Consultant, separate O & M Manuals are to be prepared by the Contractor. These manuals provide City LRT maintenance staff with written instructions and related documentation regarding the operation of, and the maintenance procedures associated with, each system and related piece of equipment that has been supplied and installed as per the requirements of the contract.

The O & M manuals are an integral part of the design and construction phase of the production of the contract documents. They are to be considered as a priority item in the commissioning and final acceptance of the work.

1.7.2.2 Copies/Sets/Distribution

The Contractor, through the Consultant, will provide a minimum of *six (6) bound paper copies and CD (in PDF and Microsoft Word format) of the O & M manuals for each discipline as described below.

***Note:** Some disciplines may require the production of more than six copies to be determined by the Project Office.

Distribution will generally be as follows:

Master copy plus one (1) Spare - ETS at D.L. MacDonald Maintenance Yard
One (1) set - Infrastructure Services, Building Maintenance at Westwood Yard
One (1) set - Buildings and Landscape Services Branch of Infrastructure Services at Century Place
One (1) set - LRT D&C at Century Place
One (1) set - Consultant

1.7.2.3 Submission Timeline Requirements

- Draft – Submitted by Contractor at 90% construction completion stage for format review (one draft copy).
- Final Edition O & M Manuals - Submitted to ETS no later than substantial completion of the contract as they are required for staff maintenance training (all copies).

1.7.2.4 Formatting Requirements

Each set of manuals will be identified by discipline as follows:

Volume 1 – Architectural / Structural
Volume 2 – Trackwork
Volume 3 – Signals
Volume 4 – Traction Power
Volume 5 – Mechanical
Volume 6 – Electrical

Volume 7 – Controls

Note: If more than one binder is required for one discipline it will have an alpha designation such as A, B, C etc. Refer to Appendix I, Standard Record Documents Additional Requirements.

A Consultant with a contract package with limited mechanical, electrical, and HVAC components may produce a combined O & M Manual. The Consultant must first have written approval from the Project Office to produce a combined document.

Six (6) 215 x 280 mm capacity extension type expanding spine catalogue binders, for each volume must be provided. They are to be bound in heavyweight dark blue fabricord (Ontario Buckham, OBV-460) debossed hot stamped in white lettering on front and spine. Each copy will be permanently numbered 1 to 6. Binders should be of sufficient capacity to hold system data while in the closed position (not expanded - maximum width 75 mm).

The number of volumes can be increased and renumbered as necessary.

1.7.2.5 Manual Cover and Spine Layout

The information to be provided on the binder cover and spine is listed below.

- Operation and Maintenance Manual	
- Project Name	
- Work Package Descriptor and Contract Number	
- Volume Number / Discipline	
- Month & Year (Substantial Completion Certificate is issued)	
- Name of Owner (The City of Edmonton)	Cover only
- Name of Project Manager	Cover only
- Name of Consultant	Cover only
- Name of General (Prime) Contractor	Cover only
- Set X of 6	Spine only

Figure 1.1 is an illustration of the required layout.

The Contractor, prior to ordering the binders, through the Consultant to the Project Office must submit a drawing of the proposed graphics layout for each O & M Manual by discipline for approval. This is to ensure the proposed layout of the manual cover meets the format of existing LRT O & M manuals.

1.7.2.6 Manual Content and Layout

The O & M manual should be generally organized as follows but may vary depending on the scope of the work, the phase of the work and the location of the work. The following information provides guidance but does not represent a strict adherence to the format presented. The Consultant is to use good judgment, and in consultation with the Project Office, draft an approved and suitable outline of acceptable content for the manual:

<u>Tabs</u>

Tabbed laminated Mylar plastic dividers must be used to separate each section. Each will be color coded according to section description as follows:

- Large Tabs

  White – Table of Contents and Introduction
  Grey – Consultant(s), Contractor(s), Supplier Lists
  Red – Safety in Maintenance
  Light Green – Contractor Warranty/Guarantee Certificates complete with a list of warranty start and completion dates. Light Orange –System Group Description (See each System Group below for descriptors)

- Small Tabs

Smaller tabs with various colors as noted below are used to divide each System Group into various sections.

Layout

Title Page (white)

Contains the same information as embossed on the front cover of the binder. Page is inserted into a clear plastic cover.

Table of Contents (white tab)

Indicates the information contained in the manual by System Group and Section. Each volume will have its own table of contents.

Introduction (to the manual) (white tab)

Provides a written description of the layout of the manual, its intended use, its purpose and instructions on how to use the manual.

Scheduled Maintenance Summary Chart

Warranty/Scheduled Maintenance/Breakdown Maintenance Log Sheets:

Sample Maintenance Sheet

Blank Maintenance Sheet

List of Drawings

List of Specifications

Equipment Schedules

Consultant, Contractor, Supplier Lists (grey tab)

The full identification requirements for the consultants, contractors, suppliers are:

- Legal company name
- Full address and postal code
- Telephone number including area code
- Facsimile number
- Email address of designated contact

Safety in Maintenance (Red)

This section of the manual is intended to provide a basic overview of safety and first aid procedures, as well as to stress certain basics when developing an in-house safety program. It is in no way intended to be contrary to occupational health and safety regulations, or internal safety procedures.

Contractor Guarantee/Warranty Certificates (Green)

Both a "sample" and a "blank" warranty/breakdown maintenance/scheduled maintenance log sheet are to be included in this section with instructions on how to complete the forms.

System Group Section

The following is the standard layout for each System Group Section:

General Requirements for Division Numbers 2 through 17:

The System Group items that are listed under each Division are generally representative of those that are found in most contracts. The Consultant, in conjunction with the Contractor, will make the final determination of the work items to be included along with the tab section numbering system. Using Division 16 Electrical as an example, the System Group would be 1.0 Power and Distribution, 2.0 Lighting, 3.0 Life Protection, etc.

Further to the example of Electrical would be the Sections under the System Group 'Power and Distribution' of 1.1 Incoming Electrical Power Services, 1.2 Secondary Power Distribution, etc.

Within each of the Sections would be the four chapter tabs:

- Dark Orange– Description of the Section (system), its basic operation and summary of its intended function
- Blue – Components (Manufacturers product data, schedules, directories, schematics, maintenance items or bulletins)
- Yellow – Shop Drawings
- Green – Test Results

List of Divisions

Division 2 – Sitework

Demolition
Excavation
Backfill
Site Grading
Paving and Surfacing
Landscaping
Survey – as built
*Trackwork

***Note:** Will generally require a separate O&M manual.

Division 3 – Concrete

Expansion Joints
Concrete floor finishes
Restoration and cleaning
Special finishes

Division 4 – Masonry

Concrete Masonry
Expansion Joints
Restoration and cleaning

Division 5 – Metals

Metal Fabrications
Expansion Control Joints
Sole plates
Bearings
Ornamental Metal

Division 6 – Wood and Plastic

Millwork
Laminated plastic
Architectural Woodwork

Division 7 – Thermal and Moisture Protection

Waterproofing – membrane & fluid
Membrane roofing
Roof accessories – skylights & hatches
Bituminous damp proofing
Built-up single membrane roofing

Metal flashing and trim
vented soffit panels
Sealants

Division 8 – Doors and Windows

Metal (Steel) doors and frames
Wood and plastic doors
Door opening assemblies
Special doors
Entrances
Aluminum entrance doors
Metal windows
Hardware – include keying system
Curtain wall
Coiling grills
Rolling shutters - metal

Division 9 – Finishes

Gypsum Board – vinyl clad
Ceramic Tile
Quarry Tile
Tile
Terrazzo
Resilient flooring
Special treatment
Painting
Wall covering

Division 10 – Specialties

Compartments and cubicles
Louvres and vents
Grills and screens
Access flooring
Lockers
Fire extinguishers
Partitions
Storage and shelving
Metal toilet partitions and washroom accessories
Roof Scuttle

Division 11 – Equipment

Maintenance equipment
Mercantile equipment
Industrial and process equipment
Shelving
Cabinets

Division 12 – Furnishings

Manufactured cabinets and casework

Division 13 – Special Construction

Sound, vibration control
Industrial and process control system

Transportation instrumentation rail control instrumentation
Fire suppression and supervisory system

Division 14 – Conveying Systems

Elevators
Escalators
Hoists and cranes

Division 15 – Mechanical

Basic material and methods
Noise, vibration
Special piping
Plumbing systems
Plumbing fixtures and trim
Fire protection
Power or heat generation
Refrigeration
Liquid heat transfer
Air distribution
Controls and instrumentation

Refer to Appendix 1 Standard Record Documents Additional Requirements, 1.0 Mechanical

Division 16 – Electrical

Power and Distribution

- Incoming Electrical Power Services
- Secondary Power Distribution System
- Transformers
- Panelboards and Power Distribution Centre's (PDC)
- Emergency Power System
- UPS
- Motor Controls
- Receptacle Systems
- Grounding and Bonding System
- Heat Tracing System
- Vaults and Pullboxes
- Miscellaneous Equipment

Lighting Systems

- Interior Lighting
- Exterior Lighting
- Lighting Controls
- Emergency Lighting

Life Safety Systems

- Fire Alarm System

Low Tension Systems

- Signals System (LRT, Traffic and Crossing)
- Fiber Optic Network
- Telephone Network
- CCTV
- Public Address
- Variable Messaging
- Ticket and Fare Validation

- Miscellaneous Systems

Refer to Appendix I Standard Record Documents Additional Requirements, 2. Division 16 Electrical

***Division 17 – BMS Controls**

***Note:** Will generally require a separate O&M Manual.

The following topics are to be covered in the BMS division of the Manual and will be tabbed in accordance with the following major sections:

- Design Intent
- Description of System
- System Start-Up
- Operation of the System
- Maintenance Requirements

Design Intent

This section outlines the design intent and provides a system overview that describes the relationships between the hardware, operating system, control software and other control components.

Description of System

This section will provide a detailed description of all system components, hardware, parts, and software. It should be presented in accordance with the following tabbed subsections:

- The Communication network (computer) and LAN provided.

  Provide a general Description of the network and communication system addressing the following:

  - Is the network a stand-a-lone or is it connected through the Internet?
  - How is the network accessed? Is it via a modem or some other medium?
  - Are there application or file servers?

  The following documentation should also be provided:

    - Network topology / layout drawing
    - Network physical layout drawing
    - Network configuration including: protocols used, IP addresses, gateways, routing tables etc.

- Hardware

  Provide a general description and specifications. Also include the following:

    - Complete listing of all equipment (Communication and LAN) identifying the manufacturer, model number, Users manual(s).
    - Electrical schematics and layout drawings.
    - Field instrumentation and sensor characteristics.
    - Valve and damper schedule.

- Software

  Describe programming and testing including a detailed and accurate description of each software module including the following:

    - Calling requirements,
    - Data exchange requirements,
    - Data file requirements and other information necessary to enable proper integration, loading, testing and program execution.

The following items are to be specifically included:

- Logic diagrams and equivalent documentation in hard copy enabling the logical step-by-step analysis for the program listings.
- Database structure and interface with running programs.
- Procedures for data base creation.
- Procedures for user software writing and implementation.
- Description of implementation of the applications software, including interface with calling and called programs.
- Description of the algorithms for the application software.
- Program cross-references.
- Subroutine lists.
- Report generator data format, output format and content.
- Alarm messages and format.

System Start-Up

Provide listing of initial conditions for all system set-points, alarm limits, control loop parameters and calibration information for sensors used.

Operation of the System

In addition to the programming and testing description in the software sub-section above, a complete description of the individual building control application system and software is to be provided.

Maintenance Requirements

This section will contain the following:

- A description of the maintenance procedures for all equipment and systems (as defined in the controls specification)
- A schedule for recommended planned and preventative maintenance work items and intervals.
- A list of resources to call upon for maintenance and servicing of equipment which includes name, address, and phone numbers for supplier and service contact for each piece of equipment.
- All of the approved shop drawings.
- A complete set of record drawings.

1.7.2.7 Systems and Equipment General Information Requirements

The following information must be provided for each system and each major piece of equipment:

- Index of information in that section in order of appearance;
- Description of system, components and technical data. Include interfaces, sequences, operational characteristic changes for seasonal operation.
- Maintenance and operating instructions;
- Recommended spare parts list;
- Schematics, single line, and wiring diagrams;
- Service representatives – name, address, and telephone number, and facsimile number;
- Suppliers for replacement parts – name, address, and telephone numbers, and facsimile number;
- Test results: witness testing, commissioning, test results;
- Certification, guarantee, warranty. Each manual will have a summary list of all applicable warranties and expiry dates;
- Troubleshooting data;
- Preventative maintenance program complete with suggested check list sheets;
- Test data of degreasing and flushing of piping;

- Hydrostatic or air tests performance;
- Equipment alignment certificates;
- Balancing data for air and water systems;
- Valve tag list; and
- Inspection approval certificates for all types of systems: elevators, escalators, plumbing, and piping, hot air and ventilating, electrical supervisory controls.

1.7.3 Other Documentation Requirements

1.7.3.1 Shop Drawings

Shop drawings are to be clear and legible and be stamped by the engineer indicating that they have been reviewed. All shop drawings are to be included in the O & M manuals in the relevant sections.

1.7.3.2 Warrantees/Guarantees

A comprehensive overview of the warrantees and guarantees are to be prepared by the Consultant and provided along with the original and specified copies. All documentation is to be placed in the appropriate section of the O & Manuals.

1.7.3.3 Fire Protection Manual

The fire protection manual describes the fire protection systems utilized in the underground portions of the Edmonton LRT System. Any future underground additions such as grade separations, tunnels, underground stations and portals will require that the manual be updated. The City will assign the responsibility for this task.

1.7.3.4 Close-out Records and Reports

Additional project closeout documentation that is required includes the following:

- Dated construction photos
- Substantial Completion Certificate
- Final Acceptance Certificate
- Construction Completion Certificate
- Project Completion Report for each major work package.

The details of the forgoing are outlined in the Project Control Manual and applicable contracts. The Consultant will determine the number of copies that are required and the timing of delivery.

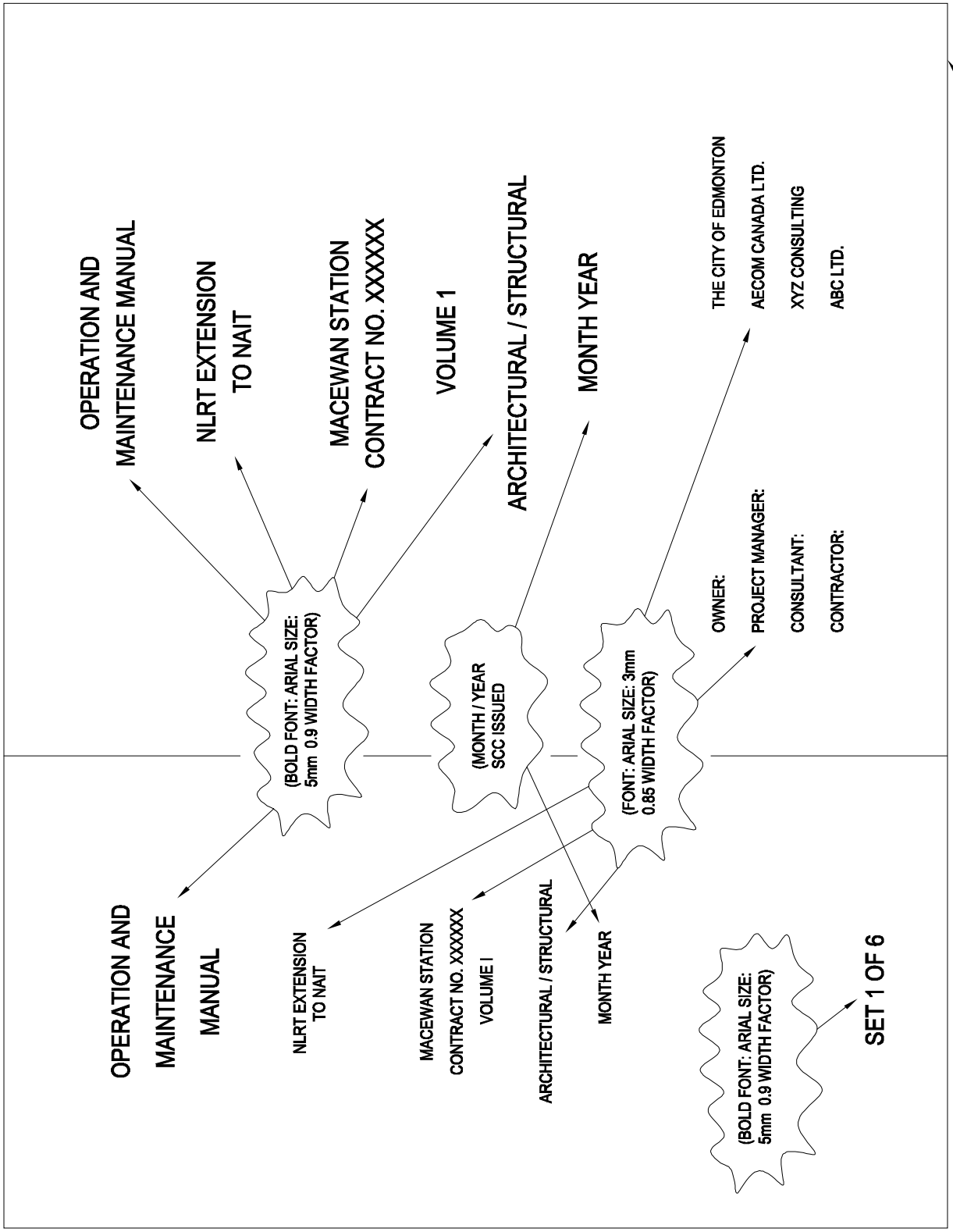

		FIGURE 1.1.	CHAPTER 1
		O & M MANUAL	GENERAL
		COVER & SPINE	
05-JUL-11	REVISION 1	LAYOUT	
Date	Revision		

1. DIVISION 15 - MECHANICAL

Plan of Record drawings must identify location of fire dampers, major control lines, access doors, tagged valves and actual room names or numbers.

In general, the Mechanical O&M manual has three volumes as follows:

Volume 2A – Mechanical Operations

This volume is organized as follows:

- **Introduction**

  Is in accordance with Section 1.7.2 the general requirements.

- **Table of Contents**

  Is in accordance with Section 1.7.2 the general requirements.

- **Consultants, Contractors and Suppliers**

  Is in accordance with Section 1.7.2 the general requirements.

- **Mechanical Systems**

  List of Mechanical Drawings

  Description of Systems

  Provide a complete and accurate description of the installed systems as follows:

  - A detailed system description and a description of components comprising that system.
  - An explanation of how the mechanical components interface with electrical components to complete the system.
  - Location of thermostats, controllers, or operating switches used.
  - Summer or winter operating variances.
  - Controller operating set points and control application programs.

  Operating Division

  An accurate and detailed description of the operation of major components must be provided as follows:

  - Information on how to energize components.
  - The exact locations of switches and controls.
  - The way in which components interface with other components.
  - The operation of controls including the operational sequence.
  - The operational changes for summer or winter operation, and how to accomplish the changeover.
  - The complete operating sequence, and safeguards to check if equipment goes off line.

Volume 2B – Mechanical Maintenance

This volume is organized as follows:

- **Introduction**

  In accordance with general requirements.

- **Table of Contents**

  In accordance with general requirements.

- **Contractors and Suppliers**

  Is in accordance with Section 1.7.2 of general requirements.

- **Equipment**

  In accordance with Section 1.7.2 of general requirements. In addition include the following:

  - An outline of the procedures for purchasing parts and equipment.
  - The recommended spare parts list.

- **Certification**

  A copy of the following is to be included in this section:

  - Test data on hydrostatic or air tests performed on piping systems.
  - Equipment alignment certificates.
  - Balancing data for air systems.
  - Valve tag identification and pipe color code.
  - Inspection approval certificates for the plumbing system, heating and ventilation systems, and fire protection systems.
  - Equipment guarantees and warranty.

- **Shop Drawings and Maintenance Bulletins**

  Materials received in compliance with the contractual requirements for “Shop Drawings” is placed in this section.

- **Preventative Maintenance**

  It is the Consultant’s responsibility to coordinate the requirements for the extension of the ETS “computerized maintenance program” to include all new equipment. The following detailed information must be documented:

  - Maintenance and lubrication schedules for major components. Schedules to outline daily, weekly, monthly, semi-annual and yearly checks and tasks.
  - Provide a detailed description of the tasks required for servicing typical equipment such as bearings, drives, motors and filters. This information will be compiled for typical equipment separate from the shop drawings.

Volume 2C – Start-Up and Activation

This volume will be organized in accordance with the general requirements.

In addition, the manual will include the following:

- System schematics for each system in the facility.
- Check sheets for systems and systems components.
- Final test reports for each system.
- Detailed step by step procedures for each system start-up.

2. <u>DIVISION 16 - ELECTRICAL</u>

In general, Division 16 is organized as follows:

- **Title Page**

  Is in accordance with Section 1.7.2 General Requirements.

- **Table of Contents**

  Is in accordance with Section 1.7.2 General Requirements.

- **Introduction**

Is in accordance with Section 1.7.2 General Requirements.

This section to also include the following:

Scheduled Maintenance Summary Chart
Warranty/Scheduled Maintenance/Breakdown Maintenance Log Sheets:
Sample Maintenance Sheet
Blank Maintenance Sheet
List of Electrical Drawings
List of Electrical Specifications
Equipment Color Coding Schedule

The plan of record drawings to reflect the as-built electrical equipment and wiring for the ROW. The record drawings are to show chainages of all ROW electrical devices including vaults, pullboxes, PDC, signals equipment, traffic signals equipment, track power devices, grounding and bonding connections, telephones and ROW lighting.

The plan of record drawings to reflect the as-built electrical equipment and wiring for the TPSS, platforms and Transit Centre's. The record drawings must show locations and wiring of all power, lighting, control, communication and fire protection systems.

- **Consultants, Contractors and Suppliers**

  Is in accordance with Section 1.7.2 General Requirements.

  Also include products supplied by Electrical Suppliers.

- **Safety in Maintenance**

  This section to include the following:

  General Safety Suggestions
  General Accident Prevention Suggestions
  Electrical Safety Suggestions
  Record Keeping and Safety

- **Contractor Guarantee/Warranty Certificates (Green)**

  Is in accordance with Section 1.7.2 General Requirements.

  Both a "sample" and a "blank" warranty/breakdown maintenance/scheduled maintenance log sheet are to be included in this section with instructions on how to complete the forms.

- **Systems**

  Division 16 is to be divided into System Groups. Each System Group is divided into Sections (in accordance general requirements) and each Section is divided into chapters.

  Each chapter to contain the following:

  <u>Description of the System</u>

  Provide an accurate and detailed description of the operation of major components including, but not limited to the following:

  - A brief explanation and description of the components comprising that system. Explain the relationships of the system to LRT operations.
  - Information on how to energize the components
  - The operation of controls including the operational sequences
  - An explanation of how electrical components interface with other electrical mechanical components.

- The location of distribution equipment, disconnect switches, magnetic motor starters, manual motor starters, lighting controls, fire alarm system components and other related equipment.
- References to related and appropriate drawings and specifications.

Components

- Manufacturer's product data, schedules, directories, schematics and bulletins.
- Manufacturers suggested preventative maintenance tasks for all electrical equipment supplied. These PM tasks are listed separately for each period (day, month, bi-yearly, yearly) and are then cross-referenced to a check list outlining task, period and corrective action taken.

Shop Drawings

- Materials/documentation received in compliance with the contractual requirements for shop drawings.
- Shop drawings to have the review stamp of both the Contractor and the Consultant.

Test Results

A copy of each of the following is to be included in this section:

- Test data and start-up reports for all systems for both factory and field testing
- Local inspection from the Authority Having Jurisdiction reports
- Manufacturer warranties and guarantees
- Contractor warranty and Construction Completion Certificate

All submissions to be complete, organized, clear, legible, dated and signed.

- **Recommended Chapter Topics**

1.0 Power and Distribution

1.1 Incoming Electrical Power Services

- Utility Feeders
- Utility Equipment including transformer(s)
- Utility Easements
- Short Circuit, Arc Flash Analysis and Co-ordination Study

1.2 Secondary Power Distribution System

- Main distribution Switchgear
- Utility metering
- Customer Metering

1.3 Transformers

- Dry Type Transformers
- Tap Adjustment Data
- Connection Details

1.4 Panelboards and Power Distribution Centre's (PDC)

- 347/600 V Distribution Centres
- Metering
- 120/208 V Distribution Centres
- Molded Case Feeder Breakers
- 347/600 V and 120/208 V Panelboards
- Ground Fault Breakers
- Transient Voltage Surge Suppressers

1.5 Emergency Power System

- Emergency Generator
- Transfer Switches
- Controls
- Sequence of Operation

1.6 UPS

- UPS Bypass
- UPS Unit
- Batteries
- UPS protection

1.7 Motor Controls

- Manual Motor Protection Switches
- Disconnect Switches
- Motor Control Centres
- Magnetic Starters
- Overcurrent Protection
- Single Phase Protection
- Adjustable Overloads
- Fire Alarm System Interface

1.8 Receptacle Systems

- Standard Receptacles
- Emergency Receptacles
- Ground Fault Interrupter Receptacles
- Car Heater Receptacles

1.9 Grounding and Bonding System

- Utility Grounding
- System Grounding
- Station Bonding
- ROW Bonding
- Catenary Pole Bonding/Grounding

1.10 Heat Tracing System

- Enclosure for Temperature Controller
- Temperature Controller
- Rain Water Leader Heat Tracing
- Sanitary Sewer and Drainage Heat Tracing

1.11 Vaults and Pullboxes

- Communication Vault
- ROW Power Pullboxes
- ROW Catenary Pullboxes
- ROW Signals Pullboxes

1.12 Miscellaneous Equipment

- Cable Tray

2.0 Lighting Systems

2.1 Interior Lighting

- Incandescent and LED lighting
- Fluorescent
- High Intensity Discharge (HID) Luminaires

2.2 Exterior Lighting

- LED Lighting
- Fluorescent
- High Intensity Discharge Luminaires

2.3 Lighting Controls

- Line Voltage Switch
- Low Voltage Switch
- Occupancy Sensor Control
- Photocells
  - BMS Control of Lighting

2.4 Emergency Lighting

- LED Exit Lights
- Battery Packs

3.0 Life Safety Systems

3.1 Overview of Fire Alarm System

- Main Control Panel
- Initiating Devices
- Signalling Devices
- Control Device
- Annunciators
- Ancillary Devices
- Battery Backup
- Devices
- Sequence of Operation
- Interface with Other Systems
- Block Diagrams
- Riser Diagram
- Schematic Diagrams

4.0 Low Tension Systems

4.1 Signals System (LRT, Traffic and Crossing)

- LRT Signals and Wayside Devices
- LRT Traffic Signals
- Pedestrian and Traffic Crossing Controller and Crossing Arms

4.2 Fiber Optic Network

- LRT Operations Fiber System
- IT Operations Fiber System
- Patch Panels and Racks
- Fiber Connectors, Connections and Splices
- Fiber Optical Drivers, Omnilynx and Interfaces

4.3 Telephone Network

- Backbone Cabling

- ROW Telephones
- Emergency Phones
- Elevator Phones
- Washroom Access Phones
- Information Phones
- Public Pay Phones

4.4 CCTV

- Platform Cameras
- Transit Centre Cameras
- ROW Cameras
- CCTV and BMS
- Matrix Switches
- Video Transmission (Ethernet/IP)
- Digital Video Recorders (DVR's)

4.5 Public Address

- Station and Platform Components
- Sequence of Operation

4.6 Variable Messaging System (VMS)

- VMS System
- VMS Signs and Locations

4.7 Ticket and Fare Validation

- Operation and Wiring Requirements

4.8 Miscellaneous Systems

- Reserved for Future

3. <u>TRACTION POWER</u>

3.1 Traction Power Substations

In addition to the requirements outlined in Section 1.7.1 one set of Plan of Record drawings must be left at the substation.

The O&M manuals will provide the following in addition to the standard requirements.

Note: The following was taken from Sections 2.4 and 2.5 of the Traction Power Substations Electrical Standards and Design Guidelines Manual. They were modified to provide additional requirements only.

- **Electrical Systems**

  Provides a detailed description of the equipment installed and a list of all supplies including a list of the drawings used, along with a brief description of each drawing.

  Detailed procedures are outlined for all systems and related equipment covering the following:

  - Equipment manufacturer's scheduled maintenance sheets and check lists. Scheduled maintenance sheets shall include detailed daily, monthly and yearly scheduled maintenance requirements.
  - Maintenance safety suggestions and procedures.
  - Final shop drawings including schematics and wiring diagrams.

- List of all major trades, subtrades and suppliers including names of equipment supplied and by whom, addresses, phone numbers, facsimile numbers and contact persons.
- All data necessary to compile a complete comprehensive Preventative Maintenance program. Data gathered shall be neatly hand-written on forms.
- Spare/replacement parts lists for all of the above. Copies of the electrical contractor's data collection sheets available during tendering period when requested.
- Test results as outlined in other sections of this standard.

- **Certification and Testing**

  Contains certification information and copies of all tests performed on the equipment installed indicating acceptance of the installation including the Final Inspection Certificate from the authority having jurisdiction (EPCOR Inspection Services).

- **Shop Drawings and Maintenance Manuals**

  This section contains detailed information on all equipment and materials used within the Substation Room under separate sub sections as outlined in the Table of Contents.

3.2 Traction Power Overhead Catenary System

Note: The following was taken from OCS Engineering Standards Manual and modified to provide additional requirements only.

- **O&M Manuals for New Installations**

  The Consultant must prepare operations and maintenance procedures for new designs and installations that require special maintenance tasks or procedures that are not already contained in the LRT overhead system O&M Manual. Such information is to be added as an addendum to the existing operations and maintenance manual. The Consultant may be required to revise and update the operations and maintenance manual at the direction of ETS or their designated representative.

  If new standard designs or construction methods are developed, the associated operations and maintenance procedures for the new standards are to be developed and added to the ETS LRT operations and maintenance standards manual.

- **Certification and Testing**

  (Refer to Section 1.6.3)

4. <u>SIGNALS</u>

All Plan of Record drawings related to the field installation of signal equipment must include the dimensioned position of all buried and embedded conduit runs.

All LRT signal system O&M manuals must include the following additional requirements*:

Note: Source is the Engineering Standards Manual for signals (Omnia).

- An index of information that is included in the manual.
- Description of system, components and technical data including interfaces, sequences, and operational characteristics.
- Maintenance and operating instructions
- Recommended spare parts list.
- Schematics, single-line and wiring diagrams.
- Contact information for service representatives including name, address, telephone number, fax number and email addresses.
- Contact information for replacement parts suppliers, including name, address, telephone number, fax number, and email address.

- All documented testing results.
- Certification, guarantee and warranty information.
- Troubleshooting procedures.
- Preventative maintenance procedures complete with suggested check list sheets.
- Any applicable inspection approval certificates.

Manuals and other descriptive material are maintained that will enable LRT personnel to maintain all LRT signal system equipment. This documentation must include descriptions, specifications, theory of operation, and other electrical, electronic, and mechanical hardware data.

Instructions must be included for preventative maintenance procedures that include examinations, tests, adjustments, and periodic cleaning. All manuals must provide guidelines for isolating the causes of hardware malfunctions and for correction or replacement of the faulty equipment.

Diagnostic program users manual must be included with complete instructions on the loading and operation of all hardware diagnostic programs. The text must include guides for locating faults, symptoms, possible causes of trouble, and suggested remedial action.

- **Software Documentation**

  Whenever software is required for the LRT signal system, documentation maintained, or provided by a third party, must include an inventory of all software programs used. The inventory shall include the name of each program and indication of whether the software is to be standard, modified, or custom. This requirement is to extend to all supporting software elements including operating systems, compilers, software development utilities, software diagnostic programs, network managers, and windows managers.

  If the software application requires a database be maintained, sufficient database user documentation shall be included, or provided by a third party, they will enable the City of Edmonton to enable the updating or regeneration of the database when inputs are changed and added, and as programs are modified and new programs are added. If a database management system or a database access routine is involved, the appropriate user documentation shall be supplied including:

  - Software code management
  - Programming language compilers and assemblers
  - Network communications management
  - Processor configuration
  - System performance monitoring and tuning
  - System restart and diagnostic procedures
  - System generation and management
  - Database generation and management
  - Display generation and management
  - Report generation and management
  - Diagnostic programs and procedures
  - Software utilities

  Any System Administrator documentation maintained for the Edmonton LRT signal system must describe procedures to be followed as a result of computer system restarts and failures. This documentation must have sufficient information to guide the System Administrator through starting and configuring any affected system, initiating diagnostics, and interpreting diagnostic and error output.

- **Software Source Code**

  For any custom software produced for the Edmonton LRT signal system, ETS requires an electronic copy of all source code or requires a copy of the source code be held in

escrow. All relevant contact information for the company holding the code in escrow must be provided to ETS.

LRT Design Guidelines 2011 EDITION

www.edmonton.ca
Projects & Plans
Future LRT
LRT Design Guidelines

City of Edmonton Design and Construction Standards *(City Design Standards)*

www.edmonton.ca
City Government
Urban Planning & Design
Servicing Agreements
City Design & Construction Standards

City of Edmonton Road and Walkway Lighting Design Standards

www.edmonton.ca
Driving, Cycling & Walking
On Your Streets
Street Lighting
Developer Consultant & Contractor Information
City of Edmonton Road and Walkway Lighting Design Standards

LRT DESIGN GUIDELINES

Chapter 2

2017 EDITION – Revisions Tracking Form

Section	Reference	Revision General Description	Issue Date
2.1	1st paragr.	Text deleted reflecting current state	July 2017
2.1	2nd paragr.	Text change ; When/Where	
2.2.2	1st paragr.	Text removal bringing paragraph up to date	
2.2.2	2nd paragr.	Text removed. Shortened intro.	
2.2.3	1st paragr.	Major text deletion.	
2.2.4	2nd paragr.	Text “tends to” removed	
2.2.4	3rd paragr.	Addition of “High frequency”	
2.2.4	4th paragr.	Test addition “further”	
2.2.4	6th paragr.	Addition of doc link, last sentence removed.	
2.2.5	1st paragr.	Grammatical update to text. Deletion of last sentence	
2.3.1.1	1st paragr.	Update to text ; Km’s and tense change	
2.3.1.2	1st paragr.	Referencing when the vehicles arrived, and AC propulsion	
2.3.1	3rd paragr.	Major change of text; Vehicles description	
2.3.1	4th paragr.	Major change of text; Vehicles description	
2.3.1	5th paragr.	Major change to text. This paragraph was originally no.3 (2.3.1)	
2.3.2.7	1st paragr.	Addition of facility storage info	
2.3.2.9	3rd paragr.	Voltage value change	
2.3.2.9	4th paragr.	Major change “Auxiliary Power Supply” paragr.	
2.3.2.9	5th paragr.	Major change “Auxiliary Power Supply” paragr.	
2.3.2.9	6th paragr.	Text change referencing Mandatory brakes	
2.3.2.9	7th paragr.	Major text change referencing Mandatory brakes	
2.3.2.10	3rd paragr.	Text change “Vehicle loading is”	
2.3.2.10	4th paragr.	Major text change referencing Jerk limits and wording	
2.3.2.10	5th paragr.	Text change referencing dynamic braking system	
2.3.2.10	8th paragr.	Text change referencing maximum and Mandatory brakes	

LRT DESIGN GUIDELINES

Chapter 2

2017 EDITION – Revisions Tracking Form

Section	Reference	Revision General Description	Issue Date
2.3.2.10	9th paragr.	Deleted	
2.3.2.10	10th paragr.	Removal of last 3 lines of the paragraph	
2.3.3.1	1st paragr.	Removal of “Many of the details..”	
2.3.3.4	1st paragr.	Text update	
2.3.3.5	Title	Section number repeated, update all subsequent numbers	
2.3.3.5	1st paragr.	Text deleted, Last sentence	
2.3.3.6	1st paragr.	Update referencing IFE plug-style doors	
2.3.3.7	1st paragr.	Text update	
2.3.3.9	1st paragr.	Text addition and last sentence removed.	
2.3.3.11	1st paragr.	Line voltage “660V”	
2.3.3.11	3rd paragr.	Text update	
2.3.3.11	4th paragr.	Major text deleted	
2.3.3.11	5th paragr.	Major text addition describing Controls, removal last 6 lines	
2.3.3.12	1st paragr.	Text update	
2.3.3.12	3rd paragr.	Text update	
2.3.3.12	4th paragr.	Text update	
2.3.3.12	5th paragr.	Text update	
2.3.3.12	6th paragr.	Text update	
2.3.3.12	7th paragr.	Text update	
2.3.3.12	8th paragr.	Text update	
2.3.3.12	10th paragr	Text update	
2.3.3.13	1st paragr.	Text update	

2.0 VEHICLES

		Page
2.0	**VEHICLES**	**1**
2.1	INTRODUCTION	1
2.2	RAIL STANDARDS AND OTHER DESIGN CONSIDERATIONS	1
2.2.1	Flammability, Smoke, and Toxicity Considerations	1
2.2.2	Environmental Considerations	1
2.2.3	Shock and Vibration Considerations	1
2.2.4	Electromagnetic Interference Considerations	1
2.2.5	Track Design Considerations	2
2.3	LIGHT RAIL VEHICLES	2
2.3.1	General	2
2.3.2	U2 Light Rail Vehicle	3
2.3.3	SD160 Light Rail Vehicle	6
2.3.4	Design Vehicle	9
2.4	AUXILIARY EQUIPMENT	9
2.4.1	Equipment Description	9
2.4.2	Work Train Characteristics	9
2.5	STATIC AND DYNAMIC ENVELOPE CONSIDERATIONS	10

List of Figures

Figure 2.1 - U2 LRV General Characteristics
Figure 2.2 - SD160 LRV General Characteristics
Figure 2.3 - Design LRV General Characteristics
Figure 2.4 - Work Train General Characteristics

2.0 VEHICLES

2.1 INTRODUCTION

For the most part, information contained in this chapter is specific to the U2 and SD160 light rail vehicles and other auxiliary equipment currently being operated by Edmonton Transit.

When new vehicles and equipment are acquired in the future, this equipment will meet all requirements related to the operational and physical limitations of the existing stations, right-of-way infrastructure, and maintenance areas.

This chapter is divided into several sections:

- Section 2.2 lists rail environment design considerations in terms of both industry standards and ETS generated documents.
- Section 2.3 provides a description of the U2 and SD160 vehicles and highlights their major characteristics.
- Section 2.4 lists rail borne auxiliary equipment used at ETS and the heaviest loadings of this equipment.

Chapter 3, Clearances and Right-of-Way, provides the criteria for the development of Edmonton's Design Vehicle and the clearances that are required for the fixed infrastructure to allow unimpeded passage along the trackway.

Due to the ongoing acquisition of new vehicles and equipment, and modifications to the existing vehicles and equipment, Design Consultants must verify with ETS that this guideline reflects the current status of the fleet.

2.2 RAIL STANDARDS AND OTHER DESIGN CONSIDERATIONS

2.2.1 Flammability, Smoke, and Toxicity Considerations

ETS's flammability, smoke and toxicity specification is described in ETS-LRV-GTI-0002.

The U2 vehicles (1978-1983) were designed to German standards including VDE (Verband Deutscher Electrotechniker), BOSTRAB and VOV (Verband Offentlicher Verkehrsbetrieb) for fire safety.

The SD160 vehicles are designed to meet the flammability, smoke and toxicity requirements specified in ETS-LRV-GTI-0002.

2.2.2 Environmental Considerations

When not in use the LRVs are normally stored inside Building A at the D.L. MacDonald Yards. Building A is a six (6) track indoor storage facility that can house sixty (60) light rail vehicles.

The temperature range of the local operational environment requires that all equipment to be incorporated into rail vehicles be fully operational over a temperature range of +40°C to -40°C and over a relative humidity range of 15% to 100%.

2.2.3 Shock and Vibration Considerations

All equipment to be mounted on U2 or SD160 LRVs must be compliant with IEC 61373.

2.2.4 Electromagnetic Interference Considerations

Electromagnetic interference (EMI) can be produced by a variety of sources within the ETS ROW and LRV system.

The overhead catenary wires supply LRV consists with short duration DC current well into the kiloampere range. This current generates magnetic fields around the catenary wiring and track negative current return paths.

High Frequency EMI occurs when the current flow is momentarily broken as the LRV's pantograph crosses an insulated section on the overhead catenary wire. This break in the current flow causes radio frequency (RF) noise to be radiated by the catenary. Similar high frequency EMI arcing may also occur when there is severe icing on the overhead wire in the winter.

The U2 LRVs generate electric fields with high frequency switching transients as the camshafts and other equipment make and break electrical contacts within the LRV. The SD160 LRVs contain IGBT based power electronic inverters that switch large currents at high frequencies. This switching action is a further source of electromagnetic interference. The SD160 LRVs also contain a variety of other low power electronic devices that can act as sources of EMI.

All of these sources have the potential of affecting sensitive electronic equipment located in facilities immediately adjacent to the LRT ROW.

No specific electromagnetic emission data was available from Siemens for the U2 LRVs. However, a 2007 study by Turner Engineering Corporation (ETS-LRV-VEN-0009) was undertaken to assess the impact of the Edmonton U2 LRV on sensitive electronic equipment including MRIs within the University of Alberta area. The study concluded that the U2 vehicles will not generate sufficiently high levels of EMI interference to adversely affect the operation of the equipment located in the University area.

2.2.5 Track Design Considerations

2.2.5.1 The mechanical characteristics of the U2 and SD160 LRVs limit the curves and gradients of the track structure as indicated below.

Track Feature	Limiting Value
Minimum Curve Radius – Yard	25 m (Empty Vehicle)
Minimum Curve Radius – Mainline	35 m (Loaded Vehicle)
Minimum Vertical Curve Radius	500 m
*Minimum Reverse Curve	25 m with 10 m tangent section between curves
Maximum Operating Grade	6%
Absolute Maximum Grade	6.7% (Limit of disc brakes for an AW4 loaded U2 LRV)

Note: Refer to Chapter 4 Track Alignment, Section 4.2.2.1

2.3 LIGHT RAIL VEHICLES

2.3.1 General

ETS operates two separate fleets of light rail vehicles.

1. The U2 fleet consists of thirty-seven (37) vehicles purchased in four sets of cars (RTE1 - RTE4) between 1978 and 1983. The U2 vehicles are propelled by DC traction drive technology. On average each of these vehicles has traveled more than 2.3 million kilometers on the Edmonton Transit track system. This fleet of vehicles was refurbished in 2008. The refurbishment did not change the operational characteristics of the vehicles themselves, but was done to update the interior and exterior of the vehicles, replace obsolete components, and extend the service life of this fleet for another fifteen (15) years.

2. Fifty-seven (57) SD160 light rail vehicles were purchased in two sets (EDM IV and EDM V) and delivered in 2009 and 2012 respectively. These vehicles are an AC propulsion technology and generate tractive effort using variable voltage variable frequency drives supplying power to three-phase induction motors.

The U2 and SD160 cars are six-axle double-ended high- floor articulated cars resting on two powered bogies and one non-powered bogie. Both vehicles are designed for high platform loading and offloading of passengers while operating in consists of up to five cars in length.

The vehicle car bodies are of a lightweight welded steel design. LAHT steel side sheets have been welded to a frame type super structure. This car body shell has been coated with body filler and sanded to create a smooth ripple free surface prior to painting. The cab ends are manufactured of reinforced fiberglass, which have been attached to the steel shell of the car body.

Due to the significant difference in technology between them, the two vehicle types are incompatible in terms of running in mixed U2/SD160 train consist for the purpose of revenue activities. In an emergency it is possible for vehicles from one fleet to mechanically couple with and “dead-tow” vehicles from the other fleet.

2.3.2 U2 Light Rail Vehicle

2.3.2.1 Vehicle Type

The U2 vehicle used by ETS was jointly designed and manufactured by Siemens and Duewag in Germany. Duewag was responsible for the structural and mechanical portions of the vehicle design while Siemens designed the light rail vehicles electrical equipment and systems.

Under the original contract the Edmonton U2 vehicles were designated as RTE and delivered in three series; RTE1 (14 cars), RTE2 (3 cars) and RTE3/4 (8/12 cars).

2.3.2.2 Vehicle Dimensions

Refer to Figure 2.1 for the U2 vehicle governing dimensions and general characteristics.

2.3.2.3 Vehicle Capacity and Weight at a given Passenger Loading

Passenger weight loading was calculated using 68 kg per passenger. This resulted in the following loadings for the U2 Fleet:

Loading	**Mass of loaded U2**	**Passenger Loading**	
		Passengers Onboard	**Passenger Distribution**
AW0	34,900 kg	Empty	none
AW1	39,184 kg	63 passengers	fully seated load + driver
AW2	45,780 kg	160 passengers	fully seated load + driver + 4 standees/m^2
AW3	49,112 kg	209 passengers	fully seated load + driver + 6 standees/m^2
AW4	52,444 kg	258 passengers (crush load)	fully seated load + driver + 8 standees/m^2

Figure 2.1 also shows the distribution of the AW4 load to each bogie.

2.3.2.4 Door Control

The U2 LRV has four double bifolding doors per side for a total of eight doors per car. The bifold panels in each doorway are electrically driven and controlled by electro-magnetic locks.

With the bifold doors open, the doorway width is 1340 mm and the doorway height is 1920 mm. This opening is divided by a vertical center stanchion containing the door push button switch and an optical obstruction sensor.

The doors are unlocked and the side selected by the Motorman through panel switches in the active cab. Once unlocked and selected, the doors can be opened individually by passengers using the stanchion mounted pushbutton switches located in each doorway. A driver's access door feature allows the Motorman to only select and release the doors immediately adjacent to the active driver's cab.

2.3.2.5 Accessibility Features

Each U2 LRV is equipped with two automated access ramps in the "A" carbody. When the handicapped access pushbutton is pressed, the ramp lowers and aligns itself with the edge of the station platform using two optical sensors. The ramp will return to the up position prior to the door closing on the next door close cycle. An extension on the outside edge of the ramp helps to reduce the horizontal gap between the station platform and vehicle.

A curved yellow stanchion replaces the stainless steel straight stanchion at each ramp access door. This curved stanchion facilitates the moving of mobility devices in and out of the LRV. The passenger seats situated between the ramp access doors and the articulation joint have been arranged longitudinally to provide additional space for mobility devices to maneuver.

The ramp operation adds approximately eleven (11) seconds to the door open, door close cycle.

2.3.2.6 Emergency Features

The U2 LRVs are equipped with two-way radios for the motormen, and passenger intercoms, emergency lighting, and fire extinguishers for emergency use. The doors can be manually opened in an emergency that involves loss of LRV power.

2.3.2.7 Environmental Considerations

The U2 LRVs are designed to operate in the environmental conditions prevalent in the Edmonton area. The storage limitations of the D.L. MacDonald facility will necessitate vehicles being stored outside if interior space is not available.

2.3.2.8 Noise Levels

The following *reports detail the noise levels generated by a typical U2 light rail vehicle.

***Note**: Reports are available upon request to ETS – LRT Division

Document Title	**Reference Number**
U2 Static Interior Noise Test Procedure	ETS-LRV-STP-0029
U2 Static Exterior Noise Test Procedure	ETS-LRV-STP-0030
U2 Dynamic Interior Noise Test Procedure	ETS-LRV-STP-0031
U2 Dynamic Exterior Noise Test Procedure	ETS-LRV-STP-0032

2.3.2.9 Electrical

<u>Power Collection</u>

Vehicle power is collected from the overhead catenary system by a pantograph mounted close to the articulation section on the roof of the "A" car of the LRV. A surge arrestor is mounted close to the pantograph to protect against over voltages and lightning strikes.

The overhead catenary supply is protected against short circuits and overloads occurring on the light rail vehicle by a vehicle-mounted 2-pole automatic circuit breaker.

Operating Voltages and Current Draw

The U2 LRV will operate at a nominal line voltage of 660 VDC (+20% to –30%). The maximum current draw for each LRV motor is adjusted to 420 amps while accelerating. There are two motors per LRV for a total current draw of 840 amps during acceleration.

Auxiliary Power Supply

All thirty-seven (37) car U2 vehicles have power electronic based auxiliary converters supplied by Transtechnik. These converters will operate from the 660 VDC supply and provide the following outputs; 3-phase 220 VAC/100 Hz (1 kVA), 3-phase 220 VAC/50 Hz or 176 VAC/40 Hz (switchable) (4 kVA), 3-phase 19.6 VAC/100 Hz (.5 kVA), and a 27.9 VDC (2.7 kW) low voltage power supply and battery charging circuit for the 24 VDC battery.

Automatic Controls

The LRV is equipped with an automatic train control device to prevent collisions and unsafe operating speeds. If the vehicle passes a red wayside signal, the automatic train control will apply a Mandatory Brake (an irrecoverable forced brake stop).

Each vehicle is equipped with a dead-man switch which must be actively engaged by the Operator when a train is in a driveable mode to prevent the train applying a Mandatory Brake.

2.3.2.10 Vehicle Performance Characteristics

Motors

Each of the two powered bogies on the LRV has one DC compensated series wound traction motor. The one-hour rating of each traction motor is 150 KW, 280 A, 600 V, 1200 RPM with 90% excitation.

Speed/Propulsion

i) Speed Characteristics

Maximum design speed = 80 km/h
Maximum operating speed = 70 km/h

ii) Acceleration

The average acceleration rate between standstill and reaching the motor's natural characteristic curve is 1.32 m/s^2 up to the AW2 weight. Vehicle loading is compensated for up to AW2.

iii) Jerk Limits

With the exception of emergency brake applications, which are not jerk limited, the maximum rate at which acceleration can change is 1.34 m/s^3.

Braking

The U2 LRV has three braking systems.

- Dynamic Braking System

  The dynamic braking system is the vehicle's primary braking system. Dynamic braking converts the vehicle's kinetic energy to thermal energy through vehicle mounted resistors to slow the LRV.

- Disc Brake System

Each bogie has an electrically released/spring applied disc brake system that is used to bring the car to a final stop. These disc brakes are applied after dynamic braking has reduced the LRV speed to 5 to 7 km/h.

- Track Brake System

  Each bogie is equipped with two track brakes that are used in emergency conditions. These track brakes are electromagnetic brakes that contact the rail when energized.

There are three braking rates used on the LRV. They are:

Maximum Service Brake rate	1.3 m/s^2
Mandatory Brake rate	1.7 m/s^2
Emergency Brake rate	2.7 m/s^2

During a mandatory braking event where dynamic braking fails to achieve an acceptable deceleration rate of 1.7 m/s^2 the track brakes will activate to increase braking effort.

2.3.2.11 Suspension

The primary suspension is comprised of 8 rubber chevrons, whereas the secondary suspension is 4 double coil springs with lateral and vertical shock absorbers.

The maximum suspension vertical deflection at AW4 loading is 38 mm. There is no horizontal movement.

2.3.3 SD160 Light Rail Vehicle

2.3.3.1 Vehicle Type and Manufacturer

The SD160 LRV manufactured by Siemens-STS in Sacramento California is based upon a modified Denver CO SD160. Fifty-seven (57) SD160 vehicles were delivered to Edmonton Transit in two purchases (2009 and 2012). Consultants are responsible for contacting ETS to ensure the accuracy of all data in regards to the SD160.

2.3.3.2 Vehicle Dimensions

Refer to Figure 2.2 for the SD160 governing vehicle dimensions and general characteristics.

2.3.3.3 Vehicle Capacity and Weight at a given Passenger Loading

Passenger weight loading has been calculated using 71 kg per passenger. This resulted in the following loadings for the SD160 Fleet:

Loading	**Mass of loaded SD160**	**Passenger Loading**	
		Passengers Onboard	**Passenger Distribution**
AW0	41,500	Empty	none
AW1	45,760 kg	60 passengers	fully seated load + driver
AW2	51,866 kg	146 passengers	fully seated load + driver + 4 standees/m^2
AW3	54,919 kg	189 passengers	fully seated load + driver + 6 standees/m^2
AW4	57,972 kg	232 passengers (crush load)	fully seated load + driver + 8 standees/m^2

Figure 2.2 also shows the distribution of the AW4 load to each bogie.

2.3.3.4 Visual Passenger Information System

The SD160 LRVs incorporate a number of LED signs to provide information to passengers. Each LRV has a front, a rear, and two side-mounted destination signs providing direction-of-travel information to passengers outside the vehicle. Additionally there are four internal LED signs-that provide further textual information to passengers already on the vehicle.

2.3.3.5 Closed Circuit Television System

The SD160 has a suite of ten cameras monitoring and recording activity both in the vehicle's passenger compartment (four cameras), and the external areas to the front, and rear, and sides (six cameras) of the vehicle. Camera video is stored onboard the vehicle and is available for three-days unless the video was tagged by the recording system as an event. Tagged video is protected from being overwritten.

2.3.3.6 Door Control

The SD160 LRV has four (4) IFE plug-style double doors per side for a total of eight (8) doors per car. Door width is 1200 mm, door height is 1880 mm. The doors are bank selected by vehicle side by the Motorman. Once selected, the doors can be opened by the passengers using buttons mounted on the doors themselves. With the doors opened it can be seen that the four crew doors have stanchions to facilitate entry from track level, while the remainder of the SD160 doorways have nothing to inhibit passenger movement in and out of the vehicle.

2.3.3.7 Accessibility Features

The two doorways in the "A" carbody located near the articulation area of the SD160, are equipped with automated access ramps and associated control devices to facilitate the entry and exit of passengers using mobility aids. Each access ramp covers the full width of the doorway.

The seats nearest the articulation joint have also been arranged longitudinally to provide additional space for mobility devices to maneuver.

2.3.3.8 Emergency Features

The SD160 LRVs are equipped with two-way radios, cameras, passenger intercoms, emergency lighting, and fire extinguishers for emergency use. In addition, in an emergency, the doors can be opened manually.

2.3.3.9 Environmental Considerations

The SD160 LRVs have been designed to operate in the environmental conditions prevalent in the Edmonton area. The storage limitations of the D.L. MacDonald facility will necessitate vehicles being stored outside if interior space is not available.

2.3.3.10 Noise Levels

While the noise levels generated by the SD160 LRVs will be determined at the time of commissioning, the vehicle is being designed such that the interior noise levels of the vehicle will not exceed 72 dBA under normal operating conditions. The noise generated by the LRV operating at speeds of up to 80 km/h will not exceed 78 dBA.

2.3.3.11 Electrical

<u>Operating Voltages and Current Draw</u>

The SD160 will operate on the ETS track system at a nominal line voltage of 660 V DC (+20% to –30%).

Power Collection

Power to the vehicle is collected by a pantograph mounted on the roof of the A carbody close to the articulation section.

Auxiliary Power Supply

An auxiliary power supply supplies power for the vehicle's miscellaneous electrical equipment. Low-voltage power will be supplied as part of the AC auxiliary power source. The design of the low-voltage power supply will be integrated with that of the AC auxiliary power source to minimize weight and to maximize performance.

Automatic Controls

The SD160 LRV is equipped with an automatic train control device to prevent collisions and unsafe operating speeds. If the vehicle passes a red wayside signal, the automatic train control will apply a Mandatory Brake (an irrecoverable forced brake stop). This braking mode is unrecoverable until the vehicle comes to a complete stop.

Each vehicle is equipped with a dead-man switch. The deadman switch must be actively engaged by the Operator when a train is in a driveable mode to prevent the train applying a Mandatory Brake.

2.3.3.12 Vehicle Performance Characteristics

Motors

The propulsion system is a dual redundant system to ensure maximum reliability. It incorporates under-frame mounted, variable voltage, variable frequency drives to control two (2), three-phase induction motors on each of the two powered bogies.

Speed/Propulsion

i) Speed Characteristics

Maximum design speed = 80 km/h
Maximum operating speed = 70 km/h

ii) Acceleration

The average acceleration rate is 1.32 m/s^2. Acceleration is load compensated up to AW3.

iii) Jerk Limits

The maximum rate at which acceleration can change is 1.3 m/s^3.

Braking

The SD160 LRV has three braking systems.

- Dynamic Braking System

  Controlled dynamic braking is continuously available from maximum vehicle speed down to a speed of 5 km/h or less. Dynamic braking is regenerative or rheostatic depending on the receptivity of the overhead catenary system.

- Friction Brake System

  The friction braking system is an electronically controlled, electric-hydraulic system, functioning as the ultimate braking system on the light rail vehicle and acting as a backup to dynamic braking during normal service braking and as the primary braking system during emergency stops and while parked.

For vehicle loading above AW2 the friction braking system supplements dynamic braking to ensure requested braking rates are achieved.

- Track Brake System

  The track brake system is used in emergency conditions. Each bogie has two electromagnetic track brakes that contact the rail when energized.

There are three braking rates used on the LRV. They are:

Maximum Service Brake rate	1.34 m/s^2
Mandatory Brake rate	1.7 m/s^2
Emergency brake rate	2.65 m/s^2

Braking rates are load compensated up to AW3. At weights above AW3, the braking rate is reduced proportional to the weight of the vehicle.

2.3.3.13 Suspension

The vehicle's primary suspension is chevron elastomeric springs. In addition, each truck bolster is supported by a secondary suspension system consisting of coil springs.

2.3.4 Design Vehicle

Refer to Figure 2.3 for the governing dimensions and general characteristics of the Design Vehicle.

The LRV loading that must be used as the basis for design is shown in this figure. The LRV design loading takes into account a variety of loading conditions and configurations.

Refer to Chapter 3 Clearances and Right-of-Way for details of the factors taken into consideration in the development of the Design Vehicle and its related dynamic envelope.

2.4 AUXILIARY EQUIPMENT

2.4.1 Equipment Description

ETS operates a number of rail-borne and road-to-rail auxiliary equipment that supports the ongoing maintenance of the LRT system as follows:

- Work Locomotive
- Side Dump cars
- Spot Ballast car
- Low Railer
- Ballast Regulator
- Tamper/Liner
- Snow Blowers
- VMB (catenary inspection vehicle)

Notwithstanding the operational aspects of this equipment on the LRT track system, it is the LRV performance characteristics that govern the design of the LRT system.

ETS has developed operating strategies for all auxiliary equipment that does not meet LRV performance characteristics.

2.4.2 Work Train Characteristics

2.4.2.1 Loadings

The Work Train consists of the locomotive, three side-dump cars and one spot-ballast car. It provides the basis for design of the supporting structural elements. Figure 2.4, Work Train General Characteristics provides the weight/design loading, dimensions, and configuration for this equipment.

2.4.2.2 Design and Operating Speed

The maximum design speed of the Work Train on mainline is 40 km/h. The maximum operating speed is limited by the operating characteristics of a specific piece of equipment within the work train consist.

2.5 STATIC AND DYNAMIC ENVELOPE CONSIDERATIONS

The definition and derivations of the terms static, dynamic and design envelope and related clearance requirements for all on-track equipment are presented in Chapter 3 Clearances and Right-of-Way.

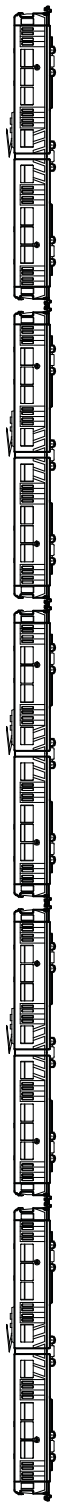

TRAIN CONSISTS OF 5 LRV'S (FOR DESIGN PURPOSES)

SCALE: 1:600

MAXIMUM DESIGN SPEED: 80 km/hr
MINIMUM CURVE RADIUS: 35 m YARD TRACK
TRACK GAUGE: 1435 mm

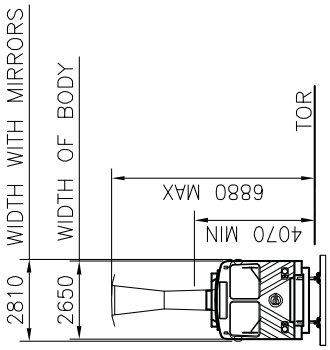

FRONT ELEVATION

SCALE: 1:250

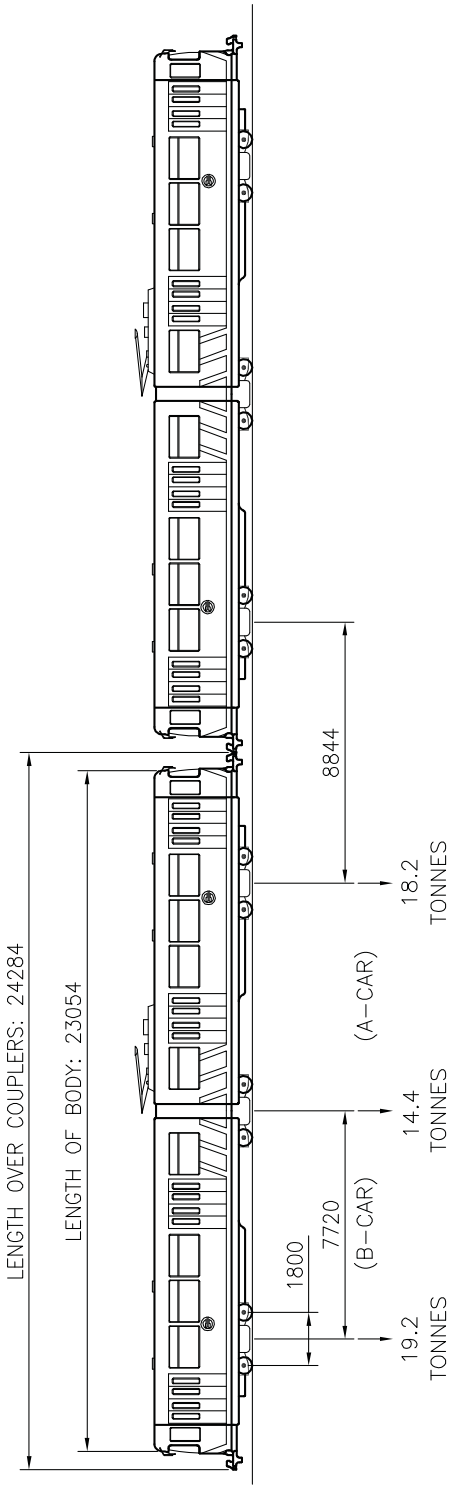

SIDE ELEVATION

SCALE: 1:250

		FIGURE 2.1 U2 GENERAL CHARACTERISTICS	CHAPTER 2 VEHICLES
DATE	REVISION		

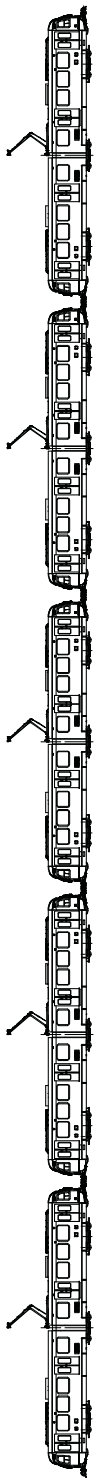

TRAIN CONSISTS OF 5 LRV'S (FOR DESIGN PURPOSES)

SCALE: 1:600

MAXIMUM DESIGN SPEED: 80 km/hr
MINIMUM CURVE RADIUS: 35 m YARD TRACK
TRACK GAUGE: 1435 mm

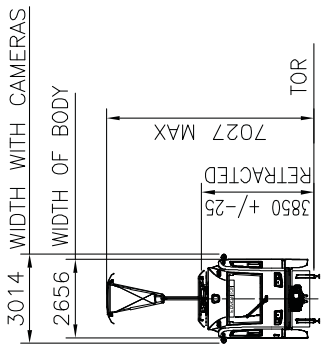

FRONT ELEVATION

SCALE: 1:250

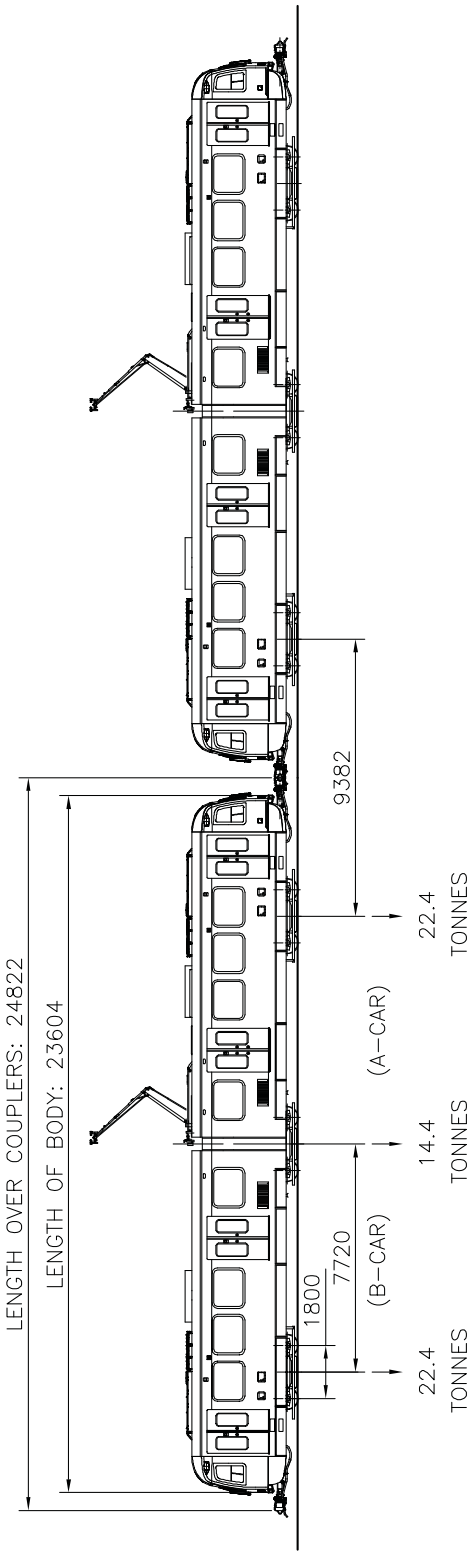

SIDE ELEVATION

SCALE: 1:250

Date	Revision	FIGURE 2.2 SD160 GENERAL CHARACTERISTICS	CHAPTER 2 VEHICLES

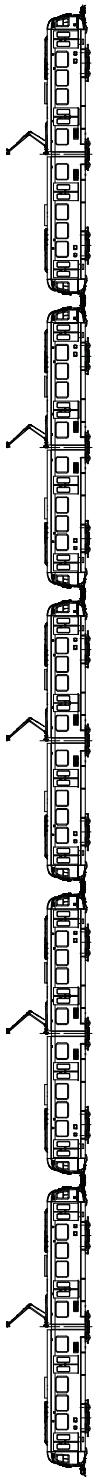

DESIGN TRAIN CONSIST OF 5 LRV'S (FOR DESIGN PURPOSES)

SCALE: 1:600

MAXIMUM DESIGN SPEED: 80 km/hr
MINIMUM CURVE RADIUS: 35 m YARD TRACK
TRACK GAUGE: 1435 mm

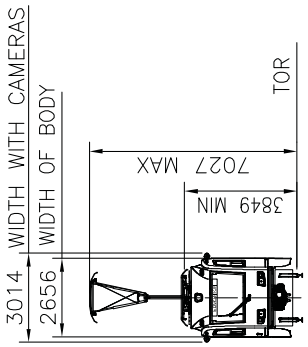

FRONT ELEVATION

SCALE: 1:250

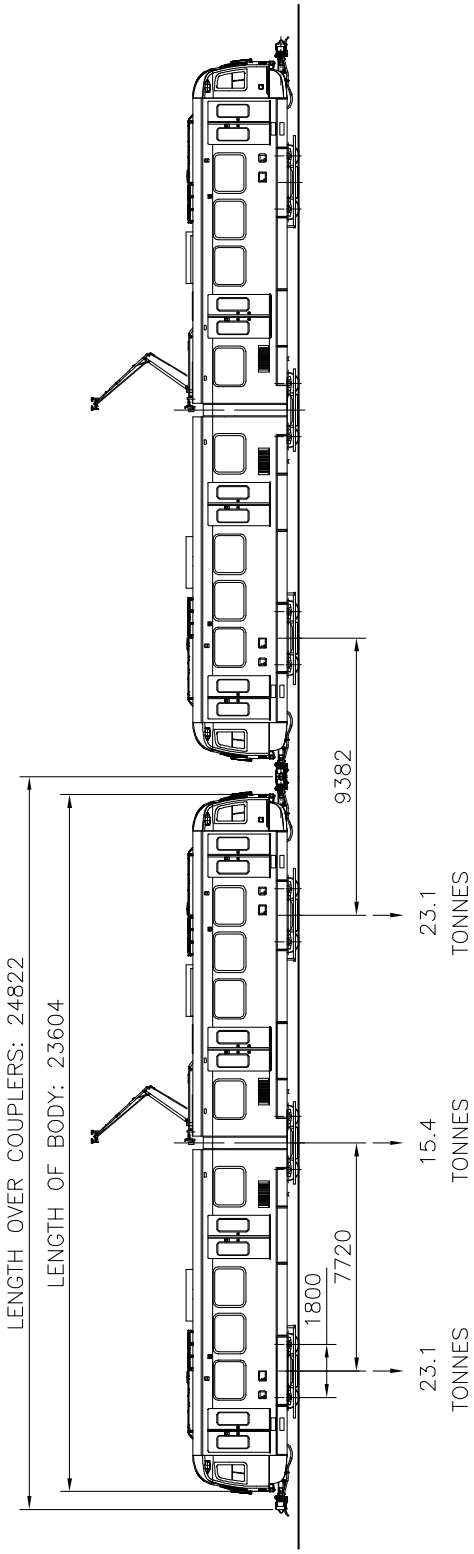

SIDE ELEVATION SHOWING DESIGN LOADING PER LRV

SCALE: 1:250

Date	Revision	FIGURE 2.3 DESIGN VEHICLE GENERAL CHARACTERISTICS	CHAPTER 2 VEHICLES

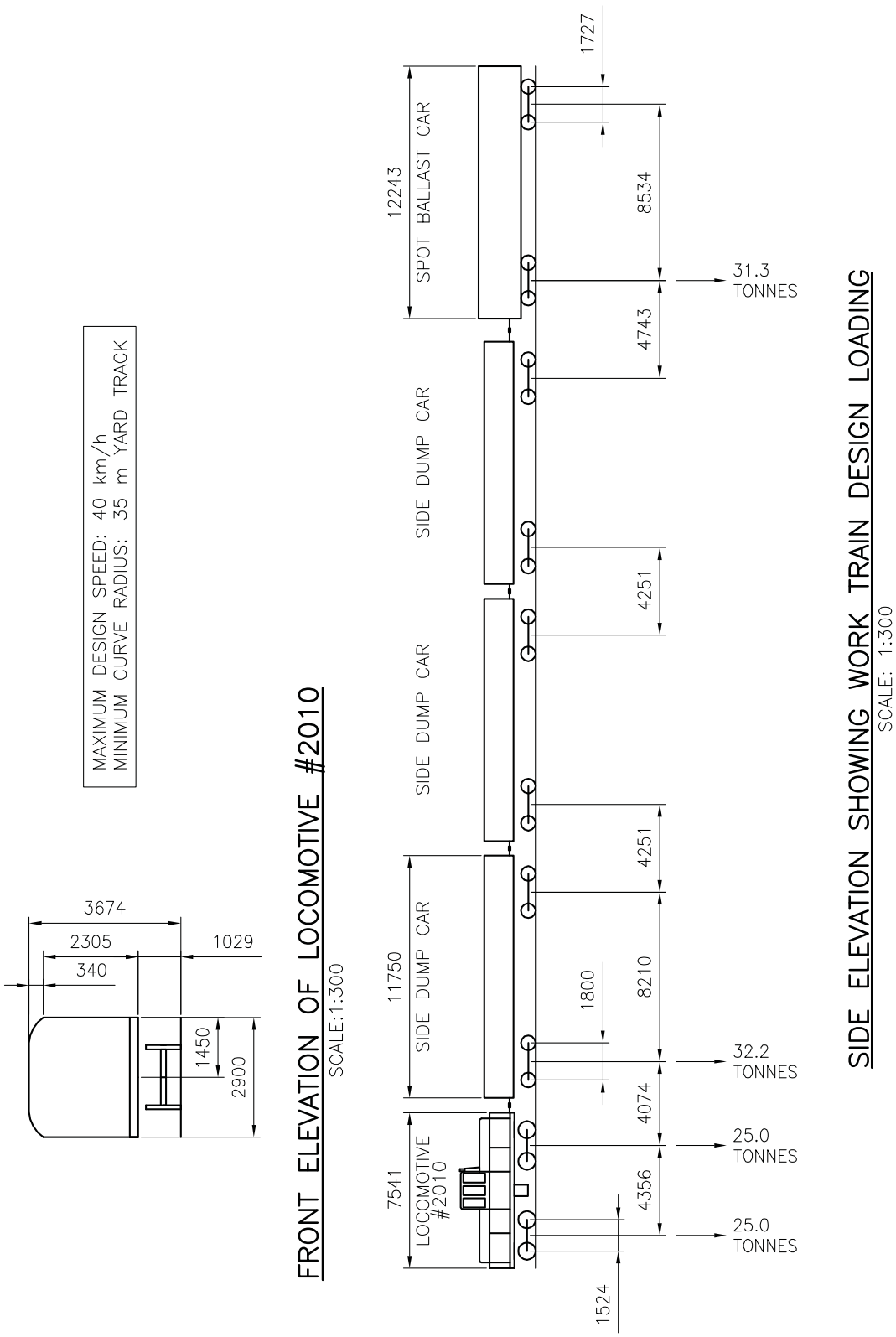

		FIGURE 2.4 WORK TRAIN GENERAL CHARACTERISTICS	CHAPTER 2 VEHICLES
DATE	REVISION		

LRT DESIGN GUIDELINES

Chapter 3

2017 EDITION – Revisions Tracking Form

Section	Reference	Revision General Description	Issue Date
		NO UPDATES FROM 2011 EDITION	July 2017

3.0 CLEARANCES AND RIGHT-OF-WAY

		Page
3.0	**CLEARANCES AND RIGHT-OF-WAY**	**1**
3.1	INTRODUCTION	1
3.2	DEFINITIONS AND TERMINOLOGY	1
3.2.1	Clearance Related	1
3.2.2	Walkway Related	2
3.2.3	Right-of-Way Related	2
3.3	Clearances	3
3.3.1	Edmonton's LRV	3
3.3.2	Edmonton's Design Vehicle	4
3.3.3	Minimum Vehicle Running Clearance Envelope (VRCE)	5
3.3.4	Application of Clearance Criteria	6
3.3.5	Minimum Vertical (Overhead) Clearance	8
3.3.6	Special Clearance Situations	9
3.4	TYPICAL SECTIONS COMBINED MAJOR TRACKWAY ELEMENTS	9
3.5	DETERMINATION OF ROW LIMITS	9
3.5.1	General	9
3.5.2	LRT Elements and Components	11
3.5.3	Typical Cross Section Configurations	12
3.6	RIGHT-OF-WAY ACQUISITION	14
3.6.1	Classification of Right-of-Way for Acquisition Purposes	14
3.6.2	ROW Acquisition Plans	14
3.6.3	Responsibility for ROW Acquisition	15

List of Figures

Figure 3 – U2 Static Envelope
Figure 3.1B – SD160 Static Envelope
Figure 3.2 – Design Vehicle Dynamic Envelope
Figure 3.3 – Curvature Effects Design Vehicle
Figure 3.4 – Curvature Effects Table of Calculated Values
Figure 3.5 – Superelevation Effects on Curves U2 Vehicle
Figure 3.6 – Superelevation Effects Table of Calculated Values
Figure 3.7 – Clearance Envelope Level Tangent Track (Open)
Figure 3.8A – Clearance Envelope Level Tangent Track (Shared Use)
Figure 3.8B – Clearance Envelope Level Tangent Embedded Track (Shared Use)
Figure 3.9 – Clearance Requirements at Station Platform
Figure 3.10 – Clearance Envelope Level Tangent Track (TBM Tunnel)
Figure 3.11 – Clearance Envelope Level Tangent Track (SEM Tunnel)
Figure 3.12 – Clearance Envelope Level Tangent Track (Underground Single Box)
Figure 3.13 – Clearance Envelope Level Tangent Track (Elevated Structure)
Figure 3.14 – Clearance Envelope Level Tangent Track (Retained Cut)
Figure 3.15 – Clearance Envelope Level Tangent Track (Retained Fill)
Figure 3.16 – Vertical Clearance to Overhead Catenary
Figure 3.17 – Vertical Clearance to Utilities Crossing Overhead Catenary
Figure 3.18A – Typical Section Combined Major Trackway Elements Shared Use ROW
Figure 3.18B – Typical Section Embedded Mainline Trackway Elements Shared Use ROW
Figure 3.19 – Typical Section Combined Major Trackway Elements TBM Tunnel
Figure 3.20 – Typical Section Combined Major Trackway Elements Underground Single Box
Figure 3.21 – Typical Section Combined Major Trackway Elements Elevated Structure
Figure 3.22 – Typical Section Combined Major Trackway Elements Portal/Retained Cut
Figure 3.23 – Typical Section Combined Major Trackway Elements Type lll Station with Roof)

APPENDIX I – ROW Widths Worksheet (Worksheet for Minimum and Preferred ROW Widths for a Sample of Typical LRT Mainline Level Tangent Trackway Cross Section Configurations).

3.0 CLEARANCES AND RIGHT-OF-WAY

3.1 INTRODUCTION

This chapter provides guidelines and criteria for Clearances and Right-of-Way. Definitions and terminology for both topics are presented at the outset. These definitions and terms will be used consistently throughout these LRT Design Guidelines.

Section 3.3, along with the accompanying figures, sets out the minimum acceptable dimensions required to assure that proper clearances are provided between ontrack vehicles and adjacent trackway elements, structures or obstructions.

The clearance figures are supplemented with a number of general cross-sectional figures that illustrate the majority of the major LRT related elements and components that have to be accommodated within the LRT right-of-way.

The chapter concludes with a description of the factors that should be considered by the Consultant when defining the LRT right-of-way limits.

3.2 DEFINITIONS AND TERMINOLOGY

3.2.1 Clearance Related

The below listed clearance related definitions are generally utilized by most North American Light Rail Transit properties and are provided for the Consultant's reference only.

LRV Static Envelope is the actual cross sectional dimensions of the vehicle used by the Light Rail Transit operating agency.

The static envelope generally forms the basis in determining the clearance requirements for the station platform edge.

LRV Dynamic Envelope is the maximum space occupied by a LRV under dynamic conditions taking into account car movements on level tangent track.

It represents the extreme LRV body displacement in any combination of rotational, lateral and vertical movements.

LRV Dynamic Outline (Plan View) is defined by the truck spacing and the vehicle overhang.

It is the basis for determining the curvature effects on clearance to the catwalk in tunnels.

Design Vehicle Static Envelope is a composite envelope that takes the LRV and rail-borne auxiliary equipment cross sectional dimensions into consideration. It defines the static envelope that accommodates all on-track vehicles used by the transit agency.

Design Vehicle Dynamic Envelope is the maximum space occupied by the design vehicle under dynamic conditions taking into account vehicle movements on a level tangent track.

Design Vehicle Dynamic Envelope includes all the worst-case scenarios having a direct influence on the movement of the design vehicle under dynamic condition.

Design Vehicle Dynamic Outline (Plan View) is defined by the truck spacing and vehicle overhang. It is required for determining the curvature effects on clearances for all mainline infrastructure except for the catwalk in tunnels.

Curvature Effects is limited to the vehicle body overhangs induced by a specific curve radius and is considered independently of other effects on the dynamic envelope.

Superelevation Effects is limited to the vehicle lean induced by a specific difference in elevations between two rails of a track and is considered independently of other effects on the dynamic envelope.

Trackwork Installation and Maintenance Tolerances define the allowable deviations of the installed track from the design track centreline and the allowable tolerances for maintenance.

Structural Clearances are the minimum horizontal and vertical clearance requirements for different trackway elements. The structural clearance requirements for different trackway elements may vary significantly.

The trackway element consultant is responsible for determining the structural clearances in accordance with the LRT Design Guidelines.

Design Vehicle Running Clearance Envelope is defined as the space occupied by the Design Vehicle Dynamic Envelope plus additional dynamic clearance requirements, as applicable, for curvature, superelevation, structural clearances and the effects of wayside factors including allowable manufacturing and maintenance tolerances.

The definitions / terminology in the following sections, 3.2.2 and 3.2.3, are commonly used on the Edmonton LRT System.

3.2.2 Walkway Related

Walkway is a narrow pathway at track level within the LRT ROW or underground structure that provides for the safe movement of LRT passengers or service personnel. It is defined by horizontal and vertical limits.

Refuge Zone is an area of restricted length and width within the LRT ROW, stations (all types) or underground structures that provides a safe area for service personnel or LRT passengers when the LRT train passes by. It is defined by horizontal and vertical limits.

Catwalk is a structural element attached to the side or cast on top of a concrete duct bank of a tunnel or underground structure. The height of the catwalk is closely matched to the height of the LRV floor. It provides a safe area for service personnel during the normal system operation and a safe evacuation pathway for LRV passengers during an emergency situation. The catwalk structure is defined by horizontal and vertical limits.

3.2.3 Right-of-Way Related

Corridor describes, in general terms, the path of the LRT right-of-way takes through an urban area.

Trackway, also referred to as the track structure, represents all the fixed physical components that directly supports and guides the LRV. They include all the trackwork components and supporting structure upon which the track rests.

Wayside is the area along the tracks that houses LRT related system components and equipment such as: signals, catenary masts etc.

Right-of-Way (ROW) is the area within which the LRT trackway and all its related system elements and facilities are placed. It is defined by a legal boundary or limits referred to as the LRT “ROW Limit”.

Mainline describes the trackway within the ROW that is dedicated to LRT revenue (passenger carrying) operations.

Open is a term used to describe the cross-sectional form of the trackway structure where there is little or no restriction placed on the ROW width. Vertical restrictions are infrequent. Normally ditch drainage is provided. This condition can apply to mainline or yard track.

At-grade is the condition where the elevation of the trackway is essentially at the same elevation as the adjacent ground topography.

Exclusive Use is an operating environment whereby the LRT alignment has exclusive and unimpeded use of the ROW. It is not shared with any other mode. The trackway is grade separated or separated / protected by a fence or barrier.

The only portions of Edmonton's LRT system that falls within this category are the underground tunnels from downtown to the University and the grade-separated bridge crossing in river valley.

Semi-exclusive Use is an operating environment whereby the LRT alignment is located in a separate ROW where motorists, pedestrians and bicyclists cross at designated controlled crossings only.

The SLRT extension south of Health Sciences Station to Century Park Station is an example of this type of operating environment.

Shared Use is the operating environment where the LRT alignment is shared with other modes such as:

- Roadway – the roadway is located beside and parallel to the LRT alignment or the LRT alignment is located within the road median.
- Railway – the railway is generally located beside and parallel to the LRT alignment.
- Walkway/Bikeway (also referred to as a shared use path) – located beside and parallel to the LRT alignment.

Frequent at-grade roadway and pedestrian crossings are evident that may require active or passive control measures.

An example of this operating environment is the northeast LRT corridor from Clareview Station to 95 Street.

Mixed Use is the operating environment whereby the LRT alignment is integrated with vehicular, pedestrian and bicycle traffic. There are no barriers or buffers providing a separation with the LRT alignment.

Edmonton currently does not have an example of this operating environment.

3.3 CLEARANCES

The ability to ensure the safe passage of LRV's within the LRT ROW is of utmost concern to ETS. The provision of adequate clearances will be rigorously monitored during both the design and construction phase of the LRT project.

All designs must meet or exceed the minimum clearance criteria contained herein. Clearances greater than those shown should be provided whenever this can be achieved without adversely influencing the cost of the facility under consideration.

Horizontal clearance dimensions are always measured in a horizontal plane irrespective of any superelevation in the track. They are to apply along a line projected perpendicular to the reference track centreline.

Vertical clearances are all measured in a vertical plane to the reference track centreline elevations.

Section 3.2 provides a number of industry-wide clearance related definitions and terms for the Consultant's reference. The following section provides additional terminology and the methodology for determining the vehicle minimum running clearance requirements to be applied on the Edmonton LRT System.

3.3.1 Edmonton's LRV

The U2 and SD160 LRV's are described in Chapter 2, Vehicles. The static envelopes for the vehicles are shown in Figures 3.1A and 3.1B.

Note: The criteria presented in these Guidelines is primarily based on the U2 LRV. The design consultants for the trackway, stations and other structural elements must check the minimum clearances based on the SD160 LRV and identify any conflicts that will require resolution early in the design process.

3.3.2 Edmonton's Design Vehicle

The design vehicle is comprised of the maximum possible dimensions taken from the U2 and SD160 LRV's and all auxiliary equipment as described in Chapter 2 used on the Edmonton LRT System. These physical dimensions include:

- Vehicle width
- Vehicle length
- Vehicle height
- Vehicle wheel base
- Vehicle front and rear ends overhang the wheel base

All LRT auxiliary equipment conforms to the Design Vehicle Dynamic Envelope (refer to Section 3.3.2.2). However, in some cases the allowable dynamic movement of the vehicle within the clearance envelope is limited due to the larger static dimensions of the auxiliary equipment. This lack of dynamic room within the dynamic envelope is mitigated by the low operating speed of this equipment.

Consideration must also be given to the clearance requirements of the auxiliary equipment at station platforms and around other structures and installations that intrude into the Design Vehicle Dynamic Envelope. In some cases portions of auxiliary equipment will project over the station platform. The trackway consultant is advised to review the auxiliary equipment static dimensions when locating gates, barriers, catwalks, walkways and other infrastructure elements inside the design vehicle dynamic envelope especially adjacent to station platforms.

The determination of minimum vehicle running clearance must consider the influence of track alignment geometry, track superelevation, trackway element installation tolerances and the specific structural clearance requirements for different trackway elements. For exceptional cases refer to Section 3.3.4.3 and 3.3.4.4.

3.3.2.1 Design Vehicle Static Envelope (DVSE)

The Design Vehicle Static Envelope is a composite static envelope that takes the both LRV's and all the auxiliary on-track vehicles into consideration when stationary. The DVSE forms the basis for the design vehicle dynamic envelope as described below.

3.3.2.2 Design Vehicle Dynamic Envelope (DVDE)

The DVDE represents the extreme car body movement that can occur under the influence of design vehicle characteristics on level, tangent track.

Design Vehicle Dynamic Envelope = Design Vehicle Static Envelope + Dynamic Movement

The DVDE (refer to Figure 3.2) is the basis for determining the minimum dynamic clearance requirements on a level tangent track for all trackway elements within the system <u>except</u> for the following areas:

- The U2 LRV static envelope (refer to Figure 3.1A) is used for determining the minimum clearance between LRV floor height and the station platform edge (refer to Section 3.3.4.3).
- At the tunnel catwalk (refer to Section 3.3.4.4).

The DVDE must be used to determine the superelevation effect.

3.3.3 Minimum Vehicle Running Clearance Envelope (VRCE)

As described above the DVDE is developed strictly on the basis of design vehicle dynamic movement on level, tangent track. The minimum vehicle running clearance requirements to permanent fixtures or structures along the entire length of trackway must also take the following factors into consideration:

- Curvature Effects (CE)
- Superelevation Effects (SE)
- Trackwork Installation and Maintenance Tolerances (TT)
- Structural Clearances (SC)

3.3.3.1 Curvature Effects (CE)

The amount of mid-vehicle in-swing and end-of-vehicle out-swing depend primarily on the vehicle truck spacing, the vehicle end overhang from the truck and the horizontal curve radius. Additional clearance must be allowed to accommodate the effect due to curvature.

The amount of In-swing and out-swing can be can be calculated using the formulae shown on Figure 3.3. The table on that figure shows the calculated values for a curve radius R = 180 m for both LRV's, the Design Vehicle and the rail borne LRT maintenance vehicles.

Figure 3.4 is a table of calculated values for curves ranging from 25 m to 1500 m. Pages 1 to 3 lists the in-swing / out-swing values for the Design Vehicle. Pages 4 to 7 lists the values for the U2 LRV and is provided as information only. Similar tables could be developed for the SD160 and the LRT track maintenance vehicles however they are not included in this edition of the Guidelines. In any event, the Design Vehicle data governs.

Out-swing is based on a worst-case scenario by ignoring the rounded or tapered ends of the design vehicle.

The additional curvature clearance through the turnout must also be considered and calculated based on the turnout curve radius.

3.3.3.2 Superelevation Effects (SE)

Superelevation introduces a rotation of the vehicle centerline with respect to the vertical axis through the track centerline. Thus an additional clearance requirement due to superelevation must be considered.

For any given location along the spiral transition zone, the linear superelevation run off from the circular curve to tangent must be considered in determining additional clearance requirement due the effect of tilting. Figure 3.5 illustrates this condition and provides a formula for calculating the displacement. Figure 3.6 is a table of calculated values for a range of superelevation dimensions.

3.3.3.3 Trackwork Installation and Maintenance Tolerances (TT)

The following are the tolerance limits for these conditions:

- Trackwork installation tolerance of +/- 6 mm vertically and laterally
- Gauge maintenance tolerance of +/- 3 mm laterally

3.3.3.4 Structural Clearances (SC)

Structure clearances and construction tolerances to different structures may vary and are discussed specifically in the following sections.

The following criteria are to be used as general guidelines for the minimum vehicle running clearance to adjacent obstructions or vehicle:

- Minimum running clearance of 50 mm to non-structural members such as wayside signal equipment, signs, etc
- Minimum running clearance of 50 mm to an emergency walkway or catwalk
- Minimum running clearance of 150 mm along aerial deck parapet, wall, and all structural members and permanent fixtures
- Minimum running clearance of 150 mm to adjacent vehicles

The minimum vehicle running clearance envelope represents the space in which no physical parts of the system other the design vehicle itself, must be placed, constructed or protruded. The VRCE can be calculated by the following formula:

$$VRCE = DVDE + SE + CE + TT + SC$$

Where,	VRCE	=	Vehicle Running Clearance Envelope
	DVDE	=	Design Vehicle Dynamic Envelope
	SE	=	Superelevation Effect
	CE	=	Curvature Effect
	TT	=	Trackwork Installation and Maintenance Tolerances
	SC	=	Structural Clearances to Trackway Elements

This clearance envelope is referenced from the centreline of track at the plane of the running rails.

The structural consultant must also consider the structural installation tolerance of +/- 50 mm in addition to allowances for chorded construction for tunnel walls, large precast aerial structure sections and catwalk.

3.3.4 Application of Clearance Criteria

The application of the clearance criteria for the majority of the standard cross-sectional configurations is provided in this section.

3.3.4.1 At-grade Mainline Open ROW

The primary elements that must be considered for the vehicle running clearance envelope are the wayside signal equipment and catenary masts along the ROW. Refer to Figure 3.7 for open track clearance requirements on a level tangent track and the minimum mast clearance criteria as described below:

The normal minimum distance from centreline of track to face of mast on tangent track is 2070 mm, based on 4500 mm track spacing.

Where balance weights are located between tracks, the masts must be offset to ensure that the weights are centered between tracks. In this case the minimum distance to the weights, including an allowance for the weight swing, must be 2040 mm.

3.3.4.2 At-grade Mainline Shared Use ROW

Figures 3.8A, 3.8B, 3.18A and 3.18B illustrate typical cross-sections for the shared use operating configurations. The Consultant must ensure that none of the following elements are located within the Dynamic Vehicle running clearance envelope:

- Roadway curb line
- Landscape features
- Street Design:
  - Pedestrian and road crossings
  - Pedestrian refuge space
  - Gates
  - Signs
  - Railings
  - Fences

- Signal Support Poles
- Poles

- Other:
  - Multi-purpose trail
  - Sound barriers
  - Railway
  - Transit Centre Circulation Roadways, etc.
  - Property line

In cases where LRT tracks are located in a ROW shared with an operating railway authority (i.e. portion of Edmonton's Northeast LRT Corridor) all clearance requirements of the railway authority must be accommodated in the design of the LRT facilities to be constructed or modified. The trackway consultant is responsible for obtaining and complying with the Authority's clearance requirements.

3.3.4.3 Station Platform Clearances

Station platforms, including access to the LRV, are designed to be wheelchair accessible. The platform clearance distances were established from the static dimensions of the two LRV's presently in service (refer to Figure 3.1A and Figure 3.1B). To ensure that the gap distance between the platform edge and the LRT static envelope and the platform height above the top of rail are acceptable, The following criteria must be met:

Horizontal Clearances (refer to Figure 3.9)

- The clearance distance from centreline of track to edge of the platform is 1405 ± 6 mm.
- The minimum clearance from centreline of track to a platform end wall or any obstruction on and above the platform level is 1700 mm.
- The minimum clearance from edge of platform to structures located on the platform such as stairways, escalators, equipment, etc., is 1700 mm. The desirable width of clear space is 2500 mm. (Refer to Chapter 10, Stations and Ancillary Facilities, Section 10.4.1.3).
- The platform should be cantilevered from supports to provide a continuous 900 mm clear set-back beneath the outside edge of the platform. This set-back provides a refuge area for persons who may fall from the platform and be trapped by the train. This set-back may be encroached upon by intermittent supports or facilities in special circumstances but first must be approved by ETS.

Vertical Clearances (refer to Figure 3.9)

- The elevation at the edge of platform finish surface above top of rail must not exceed 890+5 /-15 mm. This revised elevation is required to allow the SD160 doors (which open outwards) to open under a crush load condition.
- In circumstances where the catwalk is connected to the station platform, the platform should be transitioned to match the top of catwalk in a maximum 1:16 slope.
- The vertical clearances are governed by the requirements of the LRT overhead catenary system (refer to Section 3.3.5).

3.3.4.4 Tunnels

The underground portion of the Edmonton LRT System has been constructed using two different tunneling methodologies, Tunnel Boring Machines (TBM) and the Sequential Excavation Method (SEM) (refer to Chapter 9, Structures). The shape of each tunnel differs. Clearance requirements for each are shown in Figures 3.10 and 3.11.

Additional Clearances

The minimum running clearance requirements for bored tunnels must provide additional clearance due to curvature and superelevation. On curved track with superelevation, the bored tunnel centreline does not coincide with the track centreline. A vertical and horizontal shift of the tunnel alignment will occur relative to the track centerline. The shift in tunnel alignment can be determined in the formulae given in Figure 3.5.

Catwalk and Utility Fixtures on Tunnel Wall

The minimum running clearance requirements in the bored tunnel must also consider the presence of a catwalk, utility fixtures and the operating requirements of the overhead catenary system.

In a bored tunnel, the minimum running clearance to the concrete topping of the catwalk is determined by both the Design Vehicle dynamic envelope (refer to Figure 3.2) and the curvature effects of both the Design Vehicle dynamic envelope and the LRV dynamic outline (refer to the table in Figure 3.4).

The concrete duct bank (under the catwalk) is considered to be a permanent structure. The minimum running clearance must be determined in accordance with the DVDE (refer to Figures 3.10 and 3.11).

3.3.4.5 Box Structure

The minimum running clearance requirements are based on the DVDE and the same basic guidelines as outlined in Section 3.3.2. A typical single box structure is illustrated in Figure 3.12.

3.3.4.6 Overpass / Bridge Structure

The minimum running clearance requirements are based on the DVDE and the same guidelines as outlined in Section 3.3.2. For typical running clearance on elevated structures, refer to Figure 3.13.

3.3.4.7 Retaining Structures

Retaining structures may be required in the open cut and fill sections where the width of the ROW is restricted and/or is dictated by the topographic conditions. The guidelines for determining the minimum vehicle running clearance as outlined in Section 3.3.2 will apply.

Figures 3.14 and 3.15 indicate the typical cross-sections for retained cut and fill sections respectively. Where required the design of the retaining walls can be a determining factor in setting the final LRT ROW limit.

3.3.5 Minimum Vertical (Overhead) Clearance

As stated previously, the minimum vertical clearance distance is governed by the overhead catenary clearance requirements (refer to Chapter 6, Traction Power, Sections 6.5.3.4 and 6.5.3.7). For open ROW conditions the desirable minimum contact wire height above TOR is 4800 mm. In confined conditions (i.e. tunnels etc.) the absolute minimum distance is 4200 mm from TOR to the underside of the contact wire support structure (refer to Figure 3.16).

The space above the LRV and beneath the tunnel or underground structure ceiling is intended for overhead catenary related installations. If non-catenary related equipment (pipes, ducts etc.) is required to be installed in this area they must first be approved by ETS. To minimize the crossing distance, they should be installed at right angles to the track and on the ceiling (refer to Figure 3.17).

3.3.6 Special Clearance Situations

3.3.6.1 Under-car Clearances

Signal and trackwork equipment mounted on ties or track slab along the trackway, can intrude into the undercar clearance envelope of the design vehicle. The maximum allowable intrusion is 50 mm above the TOR.

3.3.6.2 Temporary Clearance Situations for Construction

Temporary clearance requirements for construction will be assessed on an individual basis. The Contractor is responsible for the submission of the appropriate drawings for approval by ETS.

3.3.6.3 Equipment and Pedestrian Safety

Where the LRT is constructed below or adjacent to structures that are accessible by pedestrians, a minimum clearance of 3 m must be provided between the catenary wires and any accessible areas. Its purpose is twofold: to protect the catenary wires and LRT trains from damage caused by pedestrians; and to provide protection to people from injury due to accidental contact with the energized catenary wire. This protection can be achieved through the installation of screens or fences beside or above the catenary wire.

Protective devices proposed for installation should be coordinated with the Catenary Designer to ensure that the required minimum clearance is attained and the protective device is acceptable. The Designer should refer to Chapter 6 Traction Power, Section 6.5.6.4 and Figures 6.5 and 6.6 for additional related information.

3.4 TYPICAL SECTIONS COMBINED MAJOR TRACKWAY ELEMENTS

In addition to the figures showing clearance requirements a number of other typical cross-sectional figures are also included in this chapter for the Consultant's ease of reference. The figures identify the majority of the overhead, surface and underground systems components and elements (including clearance requirements) that are generally located within or adjacent to the LRT ROW.

They are:

Figure 3.18A	–	Typical Section Combined Major Trackway Elements Shared Use ROW
Figure 3.18B	–	Typical Section Embedded Mainline Trackway Elements Shared Use ROW
Figure 3.19	–	Typical Section Combined Major Trackway Elements TBM Tunnel
Figure 3.20	–	Typical Section Combined Major Trackway Elements Underground Single Box
Figure 3.21	–	Typical Section Combined Major Trackway Elements Elevated Structure
Figure 3.22	–	Typical Section Combined Major Trackway Elements Portal/Retained Cut
Figure 3.23	–	Typical Section Combined Major Trackway Elements Type III Station

3.5 DETERMINATION OF ROW LIMITS

3.5.1 General

This section provides the guidelines to be used by Transportation Planners and Design Consultants for defining the limits of the mainline LRT ROW planned in existing and new outlying development areas of the City. All LRT ROW widths must incorporate the components / elements outlined in the following Section 3.5.2.

The following table provides a summary of the minimum and preferred ROW widths for a typical LRT surface running configurations. It is recommended that LRT ROW limits be established to accommodate preferred ROW widths wherever possible. The preferred widths provide the Designer with some flexibility in accommodating *unforeseen circumstances that may arise during the alignment design and construction phases. Designing to the minimum (while accommodating the clearance criteria and elements described in Section 3.5.2) does not provide any flexibility for accommodating *unforeseen ROW issues.

Note: Unforeseen circumstances can include, but is not limited to the following: topography variations; ground conditions dictate that the design of the base of the ballast curb be wider than typical; pedestrian gates/fencing placement is non-typical; decision made at design phase to locate one of ductbanks outside of trackway; service vehicle access to trackway or to ductbanks outside and inside trackway may not follow the typical design approach.

There will be LRT alignment design configurations whereby LRT elements and components must be located to the side of the LRT trackway. In these instances the centerline of trackway is offset from the centerline of the ROW on a number of the typical ROW cross-sections listed in the Summary Table and Appendix 1. The Trackway/ROW Planner/Designer must confirm the component location/requirements and related ROW width with ETS before finalizing the preliminary LRT ROW and the related establishment of the limits of the adjacent subdivision plans.

Details of the derivation of minimum and preferred ROW width requirements are provided in Appendix I.

Note: Figures have not been developed for all of the cross-section configurations listed in the tables. If included in the Guidelines they are referenced.

Summary Table
Minimum and Preferred ROW Widths for a Sample of Typical LRT Mainline Level Tangent Trackway Cross Section Configurations

Typical Trackway Cross Section	Minimum ROW (mm)	Preferred ROW (mm)
1 TRACKWAY OPEN AREA		
1A Basic Trackway with Ditches (refer to Figure 3.7)	18,215	19,715
1B Basic Trackway with Subdrains (refer to Figure 3.7)	11,500	12,500
1C Basic Curbed Trackway (refer to Figure 3.8)	12,700	19,700
1D Trackway at Crossover with Subdrains		
i) With switch blowers on one side	13,025	
ii) With service vehicle layby on switch blower side	15,500	
iii) Provide 1000 mm offset to ROW limit for 1Dii)		16,000
1E Trackway Configuration 1C with MUT on one side	17,100	18,100
1F Type 3 Station with 9 m Platform and Curbed Trackway Longitudinal distance required to transition ROW to basic trackway width is (50+100+20+50 = 220 m)	20,310	21,610
1G Trackway Configuration 1B at Pocket Track	22,810	23,810
2 TRACKWAY BESIDE ARTERIAL OR COLLECTOR ROAD		
2A Basic Trackway with Subdrains	12,000	15,800
2B Basic Trackway with Subdrains at Track Crossover	13,025	15,800
2C Basic Curbed Trackway	12,050	16,050
2D Basic Curbed Trackway at Track Crossover	12,275	15,050

2E Basic Curbed Trackway with Noise Wall and Shared Use Path -one side	18,495	18,995
2F Type 3 Station with 9 m Platform, Curbed Trackway and Noise Wall and MUT on one side	26,755	27,255
2G Basic Curbed Trackway at Pocket Track	22,260	23,160
3 TRACKWAY IN MEDIAN OF 4 – Lane ARTERIAL ROAD		
3Ai) Curbed Trkwy. No Left Turns at Intersections	12,700	
Aii) Curbed Trkwy. All Ped Crossings Allowed (refer to Fig. 18.2)	-	24,025
Aiii) Curbed Trkwy. Ped Crossings one Side Only Allowed (refer to Fig. 18.3)	-	22,625
Aiv) Curbed Trkwy. No Ped Crossings Allowed (refer to Fig. 18.4)	-	21,220
3B LRT Station with 9 m Platform Ped Crossing one Side Only Allowed (refer to Fig. 18.5)		30,020
3C LRT Station with 9 m Platform No Ped Crossings Allowed (refer to Fig. 18.6)	-	28,530
3D Curbed Trackway at Pocket Track (subject to Ped Crossing condition 3B or 3C)	-	TBD
4 TRACKWAY BESIDE OPERATING RAILWAY		
Provide a min. of 6000 mm offset from centre of R/R track to centerline of closest LRT track.	TBD	TBD

Note: Horizontal curves, cut or fill condition will increase ROW requirement. Typically ROW width will be established when Trackway vertical and horizontal alignment preliminary design is finalized.

The limits of the permanent ROW will be vertical or horizontal planes and must be defined using simple curves and tangents only. *Spiral curves are not to be used. Chords may be used under special conditions with the prior approval of ETS.

Note: Refer to Alberta Land Surveyors Manual of Standard Practise regarding Railway Surveys

Normally for surface running conditions the upper or lower limit of ROW is not defined. If an upper and lower limit is required (e.g. LRT running in tunnel under private property) it should be described by the elevations of horizontal planes.

3.5.2 LRT Elements and Components

Basic - Level Tangent Track

- Trackway and trackbed support structures
- Clearance requirements (refer to Section 3.3)
- Drainage facilities such as ditches, retention ponds, underground drainage pipes
- Ductbanks and Vaults
- Catenary masts and related support structures
- Track crossovers
- Wayside equipment such as switch machines and switch blowers
- Signal Equipment such as signal cabinets, crossing arm and control cabinets
- Pedestrian swing gates
- Centre and side loading station platform configurations
- LRT related utilities
- Pocket Tracks for LRV storage
- Building structures required for station access, standalone traction power substations

- LRT related landscaping
- MUT and related landscaping (if adjacent to LRT trackway)
- LRT operational and maintenance requirements such as track maintenance access, service vehicle parking

Additional Requirements – Due to track geometry

- Curvature and superelevation effect on trains (refer to Section 3.3.3)
- Fill and cut embankment side-slopes
- Fill and cut embankment retaining structures

Other Influencing Factors

- Noise Barrier Walls / Screen Fencing
- Pedestrian grade separation structure (above and below grade)
- Transit Centres constructed adjacent to an LRT Station
- Special construction techniques

3.5.3 Typical Cross Section Configurations

Only several of the configurations provided in this section are referenced in the Summary and Appendix I Tables.

3.5.3.1 At-grade Mainline Level Tangent Track (Open)

For the exclusive use ROW condition (with subdrains) the preferred horizontal distance from the centreline of the nearest track to the limit of the ROW is 6250 mm. Due to the open configuration of the cross-section the walkway / refuge zone on the outside of the tracks is not required.

Additional width is required in areas where track switches and switch blowers are required and ductbanks are located outside the trackway.

If a ditch drainage system is to be used substantial additional width is required due to the ditch geometry.

Refer to the Summary Table, Appendix I and Figure 3.7 for minimum and preferred LRT ROW width requirements.

3.5.3.2 At-grade Level Tangent Track (Shared Use)

Where the LRT is to be constructed in a roadway with a wide median, it may be possible to incorporate the trackway or other related facilities such as stations etc. into the roadway ROW width without the acquisition of additional land.

Refer to Summary Table, Appendix I, Figure 3.8, Combined Figure 3.18A and Figure 3.18B and Chapter 18, Streets Design figures for minimum and preferred width requirements for typical cross-sections.

3.5.3.3 Elevated Guideway Structure

The horizontal limit is defined by the width of the elevated guide way plus an absolute minimum allowance of 500 mm (1000 mm is preferred) outside of the structure. There may be instances where an upper limit may also have to be defined.

Refer to Figure 3.13 and Figure 3.21 which show the minimum width for a basic guideway cross-section based on the clearance requirements only. The ROW limit is subject to the provision of the applicable components /elements listed in Section 3.5.1. The limit must also include the width required for the guideway parapet.

3.5.3.4 Mainline Level Tangent Track Partially or Fully Depressed

The lateral limit of the ROW is defined by the width of the track bed, the degree of side-slope and rounding allowances. The minimum allowable side-slope is 3:1. If the side-slope is to be grassed (requires on-going maintenance) a flatter slope of 3.5:1 must be provided.

For retained cuts an absolute minimum of 350 mm must be provided from the outside edge of the retaining wall footing to the LRT ROW limit. An additional allowance may be required for pile or anchoring devices.

The ROW limit is subject to the provision of the applicable components / elements listed in Section 3.5.2. The limit must also include the width of the retaining wall footing. Refer to Figures 3.14 and Figure 3.22 for typical cross-section configurations.

Where property acquisition costs or existing development is a major constraint stand-a-lone retaining wall construction and/or in combination with side-slopes may have to be implemented.

3.5.3.5 Mainline Level Tangent Track Fill Embankment

As per the cross-section described in the previous section, the ROW is determined by the width of the track bed, the degree of side-slope, rounding allowances and drainage ditch width (if required). The minimum allowable side-slope is 3:1. If the side-slope is to be grassed (requires on-going maintenance) a flatter 3½:1 slope must be provided.

For retained fills an absolute minimum of 350 mm must be provided from the outside edge of the retaining wall footings to the ROW property line. Additional allowances may be required for pile or anchoring devices.

Refer to Clearance Figure 3.15 for a typical cross-section configuration. The ROW limit is subject to the provision of the elements listed in Section 3.5.2 including the width required for the retaining wall footing.

As per the guideline in the previous section, where property acquisition costs or existing development is a major constraint stand-a-lone retaining wall construction or in combination with side-slopes may have to be implemented.

3.5.3.6 Surface Stations

The basic ROW width required for at-grade stations includes: the trackway, the platform width, service areas and roof support walls or ballast curb/parapet walls, and catenary masts located outside of the tracks (centre loading configuration). Additional items that may impact the width are station access, fare collection and connecting corridors, passageways, landscaping requirements.

For a station with a 9 m platform the absolute minimum distance from the centre of the platform to the ROW limit is 10155 mm. Refer to Figure 3.23 for the typical minimum and preferred ROW width for a Type III station.

3.5.3.7 Underground

The width of the station with a centre loading platform configuration will generally define the minimum lateral limit for the ROW. Related considerations are the structural support system, construction methodology, tunnels, access configurations etc.

In Edmonton, the majority of the underground tunnels and stations are situated under existing streets with the property limits generally defined by the width of the street ROW.

If the underground section is not under a street but under privately owned property an easement would be negotiated with the lateral, upper and lower limits defined.

3.6 RIGHT-OF-WAY ACQUISITION

The ROW is the total of all property interests and uses required to construct, operate, protect and maintain the LRT system. Some ROW requirements are temporary and subject to revision while others are permanent. Permanent requirements are dictated by the physical space occupied the LRT components as described previously and the long term operating needs.

This section describes the classification of rights-of-way and the various factors that must be considered in establishing the ROW limit.

3.6.1 Classification of Right-of-Way for Acquisition Purposes

3.6.1.1 Full Ownership (fee simple)

Full ownership of the property extends radially from the center of the earth outward through specified lateral limits on the surface of the earth and upward.

The objective of the City is to purchase at reasonable market value the property that is required to construct the LRT project. The City will then have full control over the property once the title is transferred to them from the previous owner.

3.6.1.2 Easement

An easement is a non-possessing interest held by one party in the land owned by another party whereby the first party is allowed the partial use of the land for a specified purpose.

There are various types of easements as follows:

- Permanent surface easement with defined lateral limits. If required, upper and lower limits may also be described.
- Permanent underground easement. It encompasses the total LRT facility located below the surface of the ground. In addition to lateral limits, upper and lower limits are also described.
- Permanent aerial easement. This type of easement completely encompasses the aerial portion of the LRT facility. Lower, lateral, and if required upper limits are described.
- Construction Easement. It is established to allow a Contractor the use of a specified portion of private property for construction purposes. It is temporary in nature with a pre-determined duration for occupancy.
- Utility Easement. This is an easement that is required for the installation of LRT related utilities. They are to be treated as right-of-way. They must be in accordance with the utility agency regulations.

3.6.2 ROW Acquisition Plans

ROW plans are used as the basis for the acquisition of privately owned property that is needed to implement the LRT project. The ROW limits must be established early in the preliminary design phase in order that it can be acquired within the timeframe indicated in Section 3.6.3.

The CADD Guidelines establishes the functional layout, content and format of the ROW acquisition plans.

Registration of the final surveyed ROW and permanent easement plans is required after all of the property has been acquired.

3.6.3 Responsibility for ROW Acquisition

The Corporate Properties Branch of the Sustainable Development Department is responsible for the acquisition of property for City capital construction projects including LRT extensions. In general, the Branch should be formally requested to commence negotiations to acquire property in accordance with the following minimum timelines:

- Residential – one year prior to the start of construction.
- Businesses – two years prior to the start of construction.

Appendix I

Worksheet for Minimum and Preferred ROW Widths for a Sample of Typical LRT Mainline Level Tangent Trackway Cross Section Configurations.

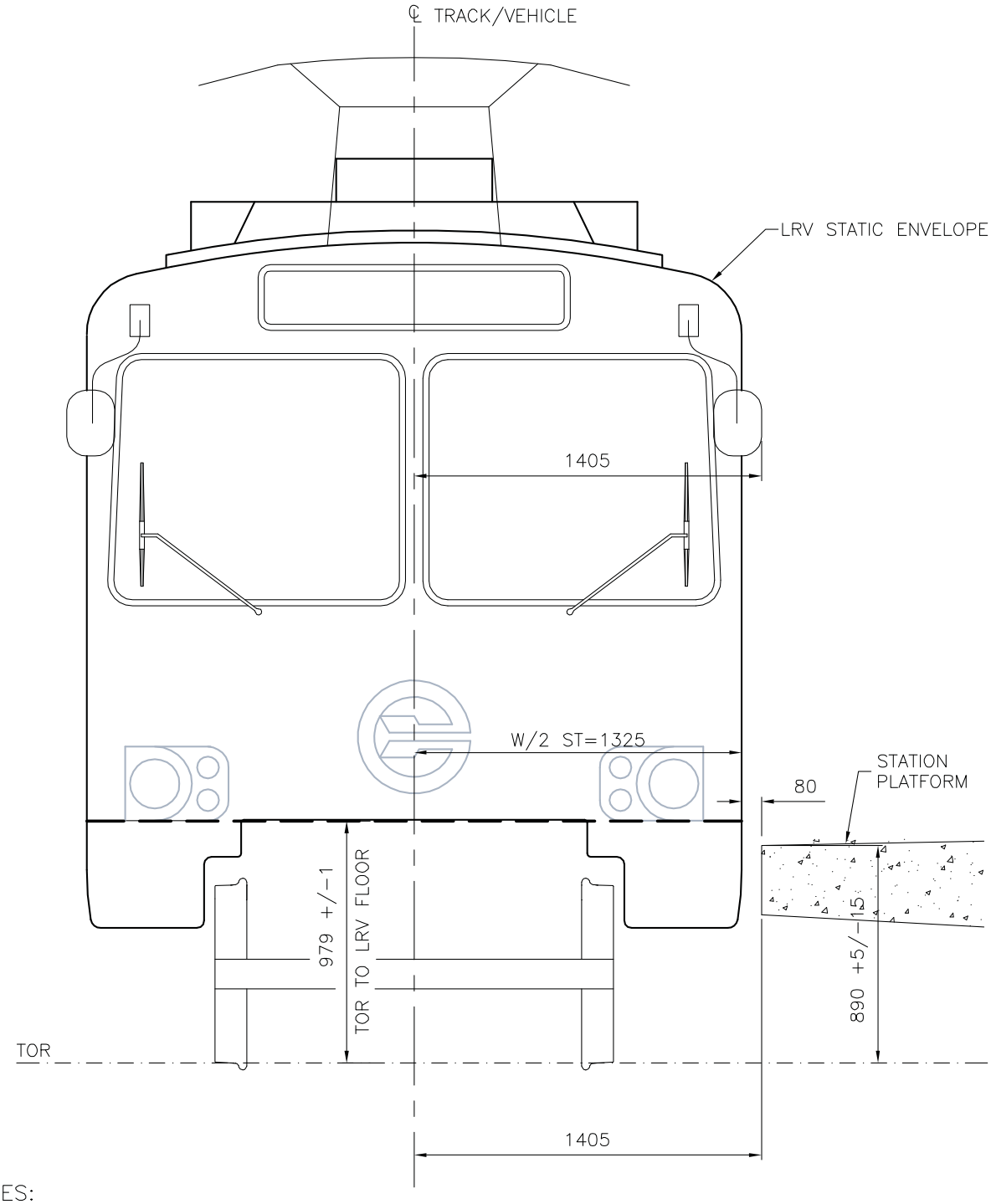

NOTES:
VERTICAL DEFLECTION FROM AWO
TO AW4 LOADING = 36mm

ST – STATIC

		FIGURE 3.1 A	CHAPTER 3
		U2	CLEARANCES AND ROW
		STATIC ENVELOPE	
Date	Revision		

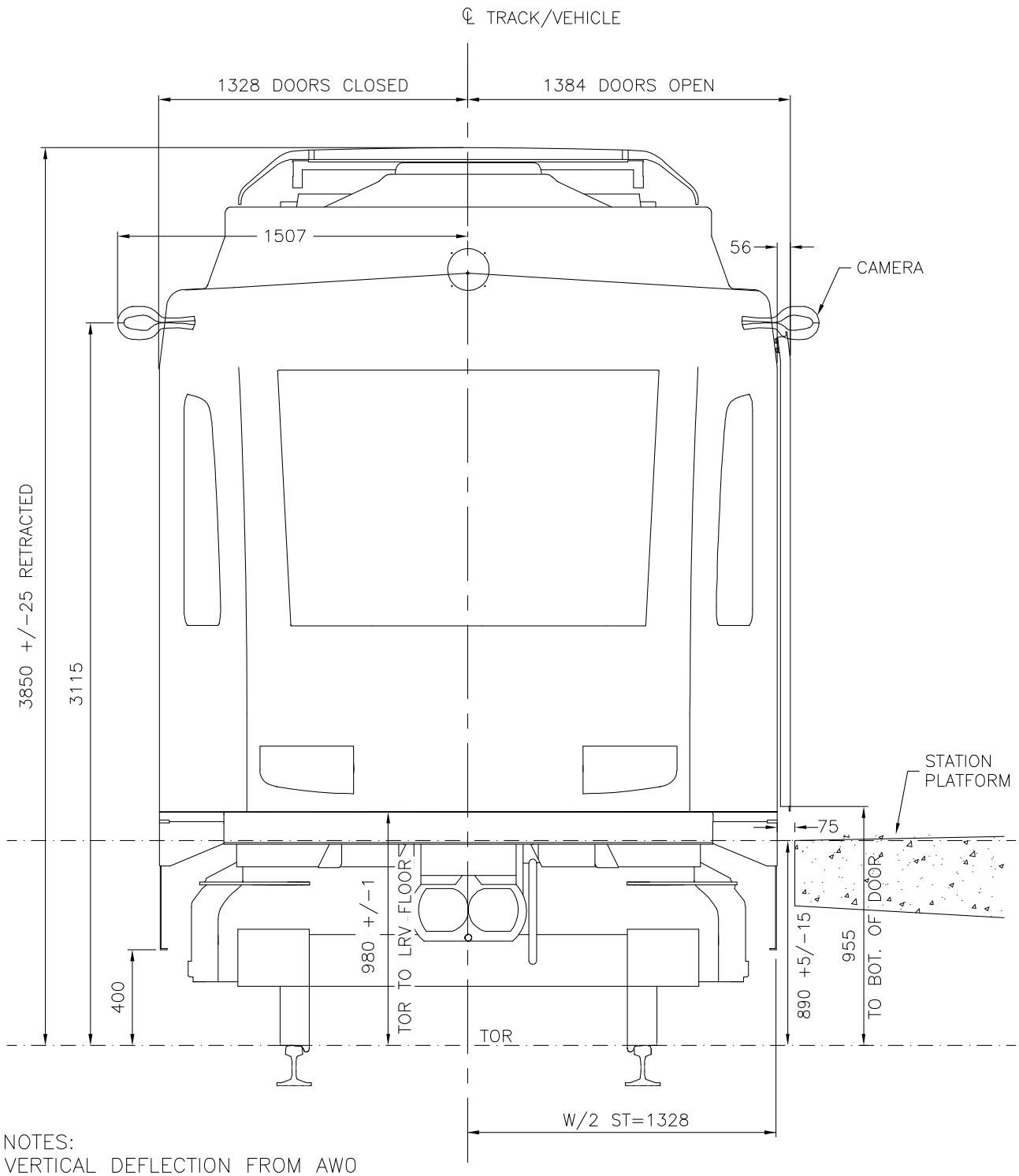

NOTES:
VERTICAL DEFLECTION FROM AW0 TO AW4 LOADING = 43mm
STATIC ENVELOPE BASED ON AW0 & 720mm WHEELS (NEW)

ST – STATIC

		FIGURE 3.1 B	CHAPTER 3
		SD160 STATIC ENVELOPE	CLEARANCES AND ROW
Date	Revision		

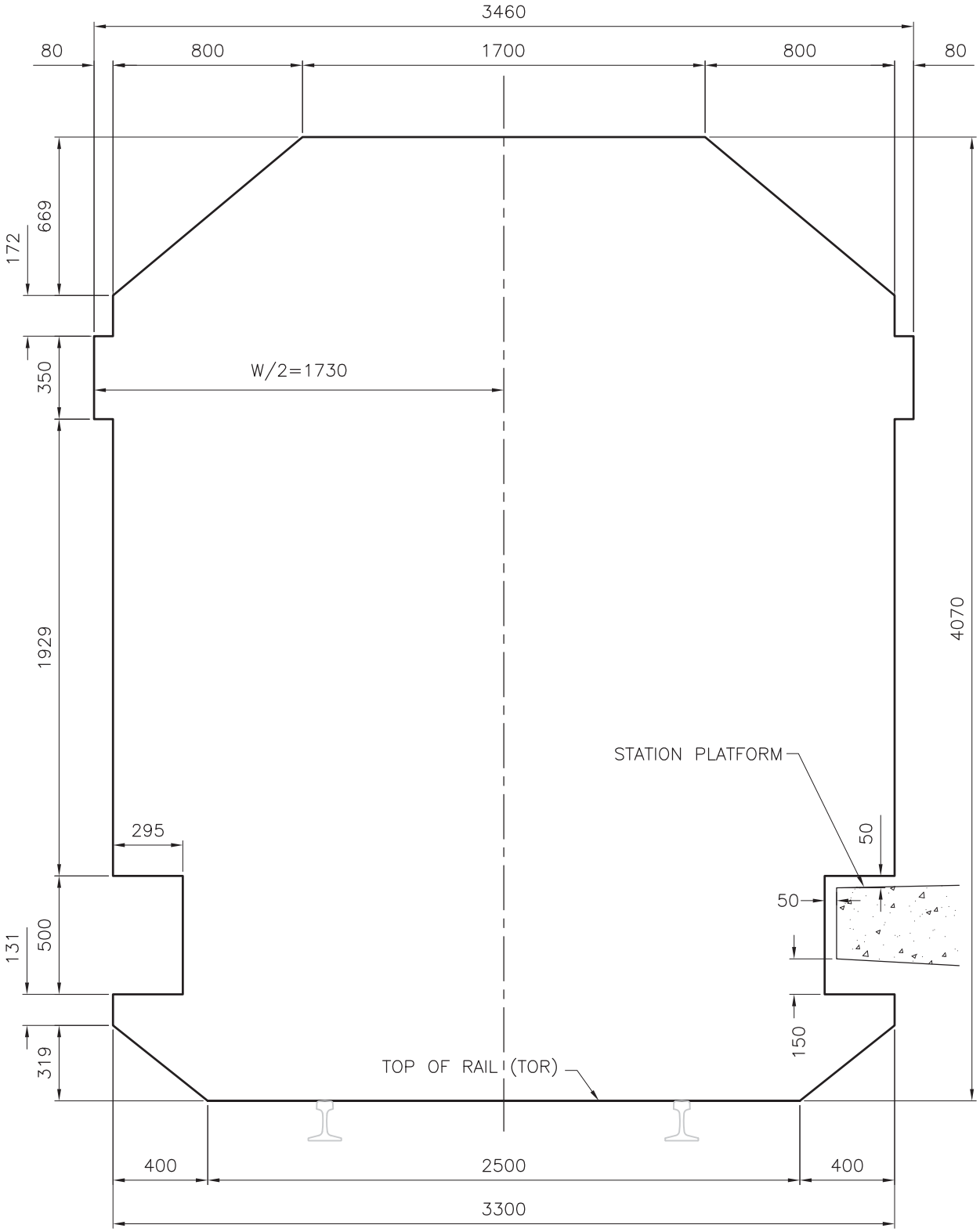

		FIGURE 3.2 DESIGN VEHICLE DYNAMIC ENVELOPE	CHAPTER 3 CLEARANCES AND ROW
30-JUN-11	REMOVED SD160 + REF ON TITLE		
Date	Revision		

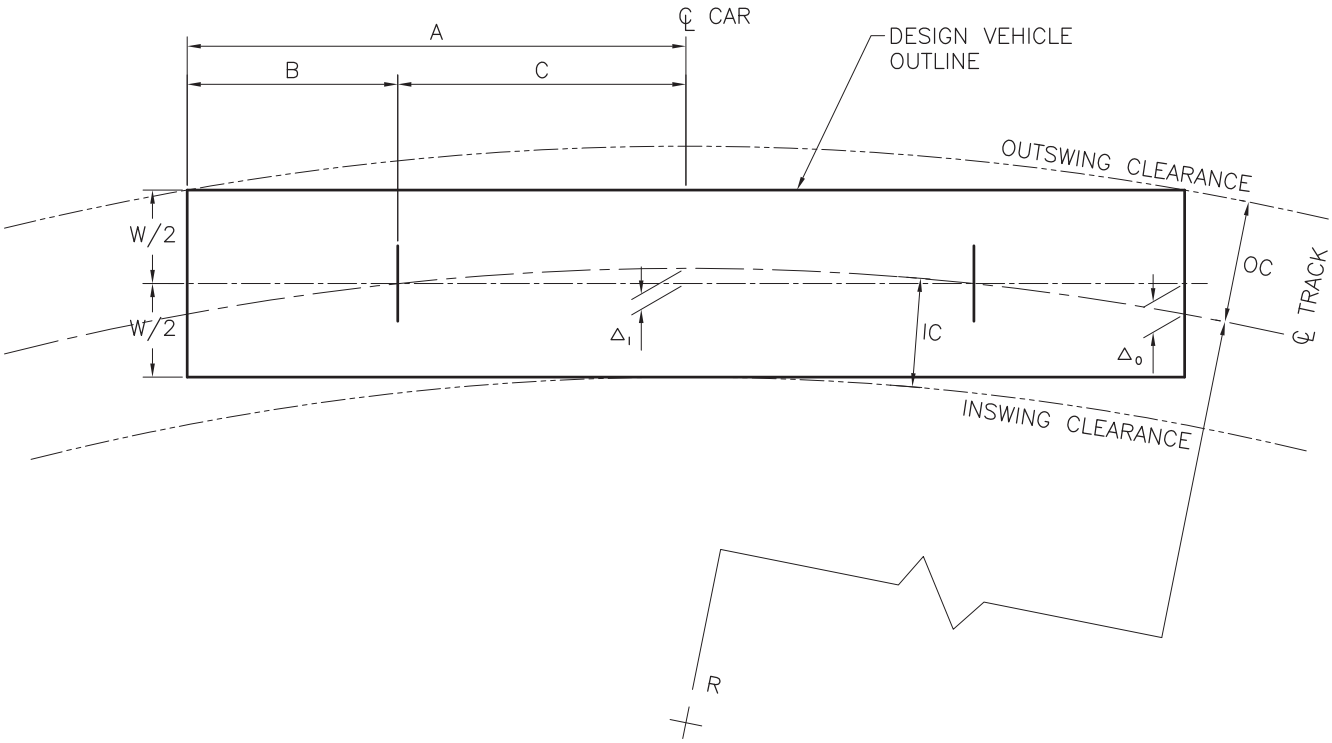

VEHICLE/EQUIPMENT	A (mm)	B (mm)	C (mm)	W/2 (mm)	R (m)	INSWING Δ_I* (mm)	OUTSWING Δ_O** (mm)	INSWING CLEARANCE (mm)	OUTSWING CLEARANCE (mm)
SD160 (TOP)	7942	4082	3860	1551	180	41	132	1592	1683
SD160 (CAMERA)	6986	3126	3860	1730	180	41	93	1771	1823
SD160 (FLOOR)	7942	4082	3860	1464	180	41	132	1505	1596
U2 (TOP)	7667	3807	3860	1563	180	41	120	1604	1683
U2 (FLOOR)	7667	3807	3860	1459	180	41	120	1500	1579
WORK TRAIN #2010	3771	1593	2178	1575	180	13	26	1588	1601
BALLAST REGULATOR	4417	3157	1260	1509	180	4	49	1513	1558
HOPPER CAR	6122	1855	4267	1219	180	51	53	1270	1272
LOW RAILER	6376	2388	3988	1331	180	44	68	1375	1399
VMB 1608 C	6500	2500	4000	1493	180	45	72	1449	1565
DESIGN VEHICLE (2009 Edition)	**7942**	**4082**	**3860**	**1730**	**180**	**41**	**132**	**1771**	**1862**

FORMULAE:

*–INSWING CALCULATION

$\Delta_I = R (1 - \cos \Theta)$

**–OUTSWING CALCULATION

$\Delta_O = ((R - \Delta_I + W / 2)^2 + A^2)^{1/2} - R - W / 2$

WHERE,

$\Theta = \sin^{-1} (C / R)$

A = B + C, extreme end of vehicle/equipment to mid distance between wheel base

B = vehicle overhang from wheel base to the front end or rear end of vehicle

C = half the distance between wheel base

W = dynamic width of vehicle/equipment

R = radius of curve (in mm)

IC = inswing clearance

OC = outside clearance

		FIGURE 3.3	CHAPTER 3
		CURVATURE EFFECTS	CLEARANCES AND ROW
06–JUL–11	ADDED VMB 1608 C	DESIGN VEHICLE	
Date	Revision		

Curvature Effects (CE)

Vehicle/Equipment	A (mm)	B (mm)	C (mm)	*W/2 (mm)	R (m)	Inswing Δ_i (mm)	Outswing Δ_o (mm)	Inswing Clearance (mm)	Outswing Clearance (mm)
Design Vehicle	7942	4082	3860	1730	25	300	868	2030	2598
	7942	4082	3860	1730	30	249	737	1979	2467
	7942	**4082**	**3860**	**1730**	**35**	**214**	**640**	**1944**	**2370**
	7942	4082	3860	1730	40	187	566	1917	2296
	7942	4082	3860	1730	45	166	507	1896	2237
	7942	4082	3860	1730	50	149	459	1879	2189
	7942	4082	3860	1730	55	136	419	1866	2149
	7942	4082	3860	1730	60	124	386	1854	2116
	7942	4082	3860	1730	65	115	357	1845	2087
	7942	4082	3860	1730	70	107	332	1837	2062
	7942	4082	3860	1730	75	99	311	1829	2041
	7942	4082	3860	1730	80	93	292	1823	2022
	7942	4082	3860	1730	85	88	276	1818	2006
	7942	4082	3860	1730	90	83	261	1813	1991
	7942	4082	3860	1730	95	78	247	1808	1977
	7942	4082	3860	1730	100	75	235	1805	1965
	7942	4082	3860	1730	110	68	214	1798	1944
	7942	4082	3860	1730	120	62	197	1792	1927
	7942	4082	3860	1730	130	57	182	1787	1912
	7942	4082	3860	1730	140	53	169	1783	1899
	7942	4082	3860	1730	150	50	158	1780	1888
	7942	4082	3860	1730	160	47	148	1777	1878
	7942	4082	3860	1730	170	44	140	1774	1870
	7942	**4082**	**3860**	**1730**	**180**	**41**	**132**	**1771**	**1862**
	7942	4082	3860	1730	190	39	125	1769	1855
	7942	4082	3860	1730	200	37	119	1767	1849
	7942	4082	3860	1730	210	35	113	1765	1843
	7942	4082	3860	1730	220	34	108	1764	1838
	7942	4082	3860	1730	230	32	104	1762	1834
	7942	4082	3860	1730	240	31	99	1761	1829
	7942	4082	3860	1730	250	30	95	1760	1825
	7942	4082	3860	1730	260	29	92	1759	1822
	7942	4082	3860	1730	270	28	88	1758	1818
	7942	4082	3860	1730	280	27	85	1757	1815
	7942	4082	3860	1730	290	26	82	1756	1812
	7942	4082	3860	1730	300	25	80	1755	1810

*** W - refers to the dynamic width of design vehicle (refer to Figure 3.3)**

Table of Calculated Values

Vehicle/Equipment	A (mm)	B (mm)	C (mm)	*W/2 (mm)	R (m)	Inswing Δ_i (mm)	Outswing Δ_o (mm)	Inswing Clearance (mm)	Outswing Clearance (mm)
Design Vehicle	7942	4082	3860	1730	310	24	77	1754	1807
	7942	4082	3860	1730	310	24	77	1754	1807
	7942	4082	3860	1730	320	23	75	1753	1805
	7942	4082	3860	1730	330	23	72	1753	1802
	7942	4082	3860	1730	340	22	70	1752	1800
	7942	4082	3860	1730	350	21	68	1751	1798
	7942	4082	3860	1730	360	21	66	1751	1796
	7942	4082	3860	1730	370	20	65	1750	1795
	7942	4082	3860	1730	380	20	63	1750	1793
	7942	4082	3860	1730	390	19	61	1749	1791
	7942	4082	3860	1730	400	19	60	1749	1790
	7942	4082	3860	1730	410	18	58	1748	1788
	7942	4082	3860	1730	420	18	57	1748	1787
	7942	4082	3860	1730	430	17	56	1747	1786
	7942	4082	3860	1730	440	17	54	1747	1784
	7942	4082	3860	1730	450	17	53	1747	1783
	7942	4082	3860	1730	460	16	52	1746	1782
	7942	4082	3860	1730	470	16	51	1746	1781
	7942	4082	3860	1730	480	16	50	1746	1780
	7942	4082	3860	1730	490	15	49	1745	1779
	7942	4082	3860	1730	500	15	48	1745	1778
	7942	4082	3860	1730	510	15	47	1745	1777
	7942	4082	3860	1730	520	14	46	1744	1776
	7942	4082	3860	1730	530	14	45	1744	1775
	7942	4082	3860	1730	540	14	44	1744	1774
	7942	4082	3860	1730	550	14	44	1744	1774
	7942	4082	3860	1730	560	13	43	1743	1773
	7942	4082	3860	1730	570	13	42	1743	1772
	7942	4082	3860	1730	580	13	41	1743	1771
	7942	4082	3860	1730	590	13	41	1743	1771
	7942	4082	3860	1730	600	12	40	1742	1770
	7942	4082	3860	1730	610	12	39	1742	1769
	7942	4082	3860	1730	620	12	39	1742	1769
	7942	4082	3860	1730	630	12	38	1742	1768
	7942	4082	3860	1730	640	12	38	1742	1768
	7942	4082	3860	1730	650	11	37	1741	1767
	7942	4082	3860	1730	660	11	36	1741	1766
	7942	4082	3860	1730	670	11	36	1741	1766
	7942	4082	3860	1730	680	11	35	1741	1765
	7942	4082	3860	1730	690	11	35	1741	1765
	7942	4082	3860	1730	700	11	34	1741	1764

*** W - refers to the dynamic width of design vehicle (refer to Figure 3.3)**

Table of Calculated Values

Figure 3.4 - Page 2 of 7

Vehicle/Equipment	A (mm)	B (mm)	C (mm)	*W/2 (mm)	R (m)	Inswing Δ_i (mm)	Outswing Δ_o (mm)	Inswing Clearance (mm)	Outswing Clearance (mm)
Design Vehicle	7942	4082	3860	1730	710	10	34	1740	1764
	7942	4082	3860	1730	720	10	33	1740	1763
	7942	4082	3860	1730	730	10	33	1740	1763
	7942	4082	3860	1730	740	10	32	1740	1762
	7942	4082	3860	1730	750	10	32	1740	1762
	7942	4082	3860	1730	760	10	32	1740	1762
	7942	4082	3860	1730	770	10	31	1740	1761
	7942	4082	3860	1730	780	10	31	1740	1761
	7942	4082	3860	1730	790	9	30	1739	1760
	7942	4082	3860	1730	800	9	30	1739	1760
	7942	4082	3860	1730	810	9	30	1739	1760
	7942	4082	3860	1730	820	9	29	1739	1759
	7942	4082	3860	1730	830	9	29	1739	1759
	7942	4082	3860	1730	840	9	29	1739	1759
	7942	4082	3860	1730	850	9	28	1739	1758
	7942	4082	3860	1730	860	9	28	1739	1758
	7942	4082	3860	1730	870	9	28	1739	1758
	7942	4082	3860	1730	880	8	27	1738	1757
	7942	4082	3860	1730	890	8	27	1738	1757
	7942	4082	3860	1730	900	8	27	1738	1757
	7942	4082	3860	1730	910	8	26	1738	1756
	7942	4082	3860	1730	920	8	26	1738	1756
	7942	4082	3860	1730	930	8	26	1738	1756
	7942	4082	3860	1730	940	8	26	1738	1756
	7942	4082	3860	1730	950	8	25	1738	1755
	7942	4082	3860	1730	960	8	25	1738	1755
	7942	4082	3860	1730	970	8	25	1738	1755
	7942	4082	3860	1730	980	8	25	1738	1755
	7942	4082	3860	1730	990	8	24	1738	1754
	7942	4082	3860	1730	1000	7	24	1737	1754
	7942	4082	3860	1730	1050	7	23	1737	1753
	7942	4082	3860	1730	1100	7	22	1737	1752
	7942	4082	3860	1730	1150	6	21	1736	1751
	7942	4082	3860	1730	1200	6	20	1736	1750
	7942	4082	3860	1730	1250	6	19	1736	1749
	7942	4082	3860	1730	1300	6	18	1736	1748
	7942	4082	3860	1730	1350	6	18	1736	1748
	7942	4082	3860	1730	1400	5	17	1735	1747
	7942	4082	3860	1730	1450	5	17	1735	1747
	7942	4082	3860	1730	1500	5	16	1735	1746

*** W - refers to the dynamic width of design vehicle (refer to Figure 3.3)**

Table of Calculated Values

Figure 3.4 - Page 3 of 7

Vehicle/Equipment	A (mm)	B (mm)	C (mm)	*W/2 (mm)	R (m)	Inswing Δ_i (mm)	Outswing Δ_o (mm)	Inswing Clearance (mm)	Outswing Clearance (mm)
U2	7667	3807	3860	1459	25	300	801	1759	2260
At Floor Level	7667	3807	3860	1459	30	249	679	1708	2138
	7667	**3807**	**3860**	**1459**	**35**	**214**	**589**	**1673**	**2048**
	7667	3807	3860	1459	40	187	519	1646	1978
	7667	3807	3860	1459	45	166	465	1625	1924
	7667	3807	3860	1459	50	149	420	1608	1879
	7667	3807	3860	1459	55	136	384	1595	1843
	7667	3807	3860	1459	60	124	353	1583	1812
	7667	3807	3860	1459	65	115	327	1574	1786
	7667	3807	3860	1459	70	107	304	1566	1763
	7667	3807	3860	1459	75	99	285	1558	1744
	7667	3807	3860	1459	80	93	267	1552	1726
	7667	3807	3860	1459	85	88	252	1547	1711
	7667	3807	3860	1459	90	83	238	1542	1697
	7667	3807	3860	1459	95	78	226	1537	1685
	7667	3807	3860	1459	100	75	215	1534	1674
	7667	3807	3860	1459	110	68	196	1527	1655
	7667	3807	3860	1459	120	62	180	1521	1639
	7667	3807	3860	1459	130	57	166	1516	1625
	7667	3807	3860	1459	140	53	154	1512	1613
	7667	3807	3860	1459	150	50	144	1509	1603
	7667	3807	3860	1459	160	47	135	1506	1594
	7667	3807	3860	1459	170	44	128	1503	1587
	7667	**3807**	**3860**	**1459**	**180**	**41**	**121**	**1500**	**1580**
	7667	3807	3860	1459	190	39	114	1498	1573
	7667	3807	3860	1459	200	37	109	1496	1568
	7667	3807	3860	1459	210	35	103	1494	1562
	7667	3807	3860	1459	220	34	99	1493	1558
	7667	3807	3860	1459	230	32	95	1491	1554
	7667	3807	3860	1459	240	31	91	1490	1550
	7667	3807	3860	1459	250	30	87	1489	1546
	7667	3807	3860	1459	260	29	84	1488	1543
	7667	3807	3860	1459	270	28	81	1487	1540
	7667	3807	3860	1459	280	27	78	1486	1537
	7667	3807	3860	1459	290	26	75	1485	1534
	7667	3807	3860	1459	300	25	73	1484	1532

*** W - refers to the dynamic width of U2 vehicle (refer to Figure 3.3)**

Table of Calculated Values

Vehicle/Equipment	A (mm)	B (mm)	C (mm)	*W/2 (mm)	R (m)	Inswing Δ_i (mm)	Outswing Δ_o (mm)	Inswing Clearance (mm)	Outswing Clearance (mm)
U2 At Floor Level	7667	3807	3860	1459	310	24	70	1483	1529
	7667	3807	3860	1459	310	24	70	1483	1529
	7667	3807	3860	1459	320	23	68	1482	1527
	7667	3807	3860	1459	330	23	66	1482	1525
	7667	3807	3860	1459	340	22	64	1481	1523
	7667	3807	3860	1459	350	21	62	1480	1521
	7667	3807	3860	1459	360	21	61	1480	1520
	7667	3807	3860	1459	370	20	59	1479	1518
	7667	3807	3860	1459	380	20	57	1479	1516
	7667	3807	3860	1459	390	19	56	1478	1515
	7667	3807	3860	1459	400	19	55	1478	1514
	7667	3807	3860	1459	410	18	53	1477	1512
	7667	3807	3860	1459	420	18	52	1477	1511
	7667	3807	3860	1459	430	17	51	1476	1510
	7667	3807	3860	1459	440	17	50	1476	1509
	7667	3807	3860	1459	450	17	49	1476	1508
	7667	3807	3860	1459	460	16	47	1475	1506
	7667	3807	3860	1459	470	16	46	1475	1505
	7667	3807	3860	1459	480	16	46	1475	1505
	7667	3807	3860	1459	490	15	45	1474	1504
	7667	3807	3860	1459	500	15	44	1474	1503
	7667	3807	3860	1459	510	15	43	1474	1502
	7667	3807	3860	1459	520	14	42	1473	1501
	7667	3807	3860	1459	530	14	41	1473	1500
	7667	3807	3860	1459	540	14	40	1473	1499
	7667	3807	3860	1459	550	14	40	1473	1499
	7667	3807	3860	1459	560	13	39	1472	1498
	7667	3807	3860	1459	570	13	38	1472	1497
	7667	3807	3860	1459	580	13	38	1472	1497
	7667	3807	3860	1459	590	13	37	1472	1496
	7667	3807	3860	1459	600	12	36	1471	1495
	7667	3807	3860	1459	610	12	36	1471	1495
	7667	3807	3860	1459	620	12	35	1471	1494
	7667	3807	3860	1459	630	12	35	1471	1494
	7667	3807	3860	1459	640	12	34	1471	1493
	7667	3807	3860	1459	650	11	34	1470	1493
	7667	3807	3860	1459	660	11	33	1470	1492
	7667	3807	3860	1459	670	11	33	1470	1492
	7667	3807	3860	1459	680	11	32	1470	1491
	7667	3807	3860	1459	690	11	32	1470	1491
	7667	3807	3860	1459	700	11	31	1470	1490

*** W - refers to the dynamic width of U2 vehicle (refer to Figure 3.3)**

Table of Calculated Values

Figure 3.4 - Page 5 of 7

Vehicle/Equipment	A (mm)	B (mm)	C (mm)	*W/2 (mm)	R (m)	Inswing Δ_i (mm)	Outswing Δ_o (mm)	Inswing Clearance (mm)	Outswing Clearance (mm)
U2 At Floor Level	7667	3807	3860	1459	710	10	31	1469	1490
	7667	3807	3860	1459	720	10	30	1469	1489
	7667	3807	3860	1459	730	10	30	1469	1489
	7667	3807	3860	1459	740	10	30	1469	1489
	7667	3807	3860	1459	750	10	29	1469	1488
	7667	3807	3860	1459	760	10	29	1469	1488
	7667	3807	3860	1459	770	10	28	1469	1487
	7667	3807	3860	1459	780	10	28	1469	1487
	7667	3807	3860	1459	790	9	28	1468	1487
	7667	3807	3860	1459	800	9	27	1468	1486
	7667	3807	3860	1459	810	9	27	1468	1486
	7667	3807	3860	1459	820	9	27	1468	1486
	7667	3807	3860	1459	830	9	26	1468	1485
	7667	3807	3860	1459	840	9	26	1468	1485
	7667	3807	3860	1459	850	9	26	1468	1485
	7667	3807	3860	1459	860	9	25	1468	1484
	7667	3807	3860	1459	870	9	25	1468	1484
	7667	3807	3860	1459	880	8	25	1467	1484
	7667	3807	3860	1459	890	8	25	1467	1484
	7667	3807	3860	1459	900	8	24	1467	1483
	7667	3807	3860	1459	910	8	24	1467	1483
	7667	3807	3860	1459	920	8	24	1467	1483
	7667	3807	3860	1459	930	8	24	1467	1483
	7667	3807	3860	1459	940	8	23	1467	1482
	7667	3807	3860	1459	950	8	23	1467	1482
	7667	3807	3860	1459	960	8	23	1467	1482
	7667	3807	3860	1459	970	8	23	1467	1482
	7667	3807	3860	1459	980	8	22	1467	1481
	7667	3807	3860	1459	990	8	22	1467	1481
	7667	3807	3860	1459	1000	7	22	1466	1481
	7667	3807	3860	1459	1050	7	21	1466	1480
	7667	3807	3860	1459	1100	7	20	1466	1479
	7667	3807	3860	1459	1150	6	19	1465	1478
	7667	3807	3860	1459	1200	6	18	1465	1477
	7667	3807	3860	1459	1250	6	18	1465	1477
	7667	3807	3860	1459	1300	6	17	1465	1476
	7667	3807	3860	1459	1350	6	16	1465	1475
	7667	3807	3860	1459	1400	5	16	1464	1475
	7667	3807	3860	1459	1450	5	15	1464	1474
	7667	3807	3860	1459	1500	5	15	1464	1474

*** W - refers to the dynamic width of U2 vehicle (refer to Figure 3.3)**

Table of Calculated Values

Figure 3.4 - Page 6 of 7

Vehicle/Equipment	A (mm)	B (mm)	C (mm)	*W/2 (mm)	R (m)	Inswing Δ_i (mm)	Outswing Δ_o (mm)	Inswing Clearance (mm)	Outswing Clearance (mm)
U2 At Floor Level	7667	3807	3860	1459	1600	5	14	1464	1473
	7667	3807	3860	1459	1700	4	13	1463	1472
	7667	3807	3860	1459	1800	4	12	1463	1471
	7667	3807	3860	1459	1900	4	12	1463	1471
	7667	3807	3860	1459	2000	4	11	1463	1470
	7667	3807	3860	1459	2100	4	10	1463	1469
	7667	3807	3860	1459	2200	3	10	1462	1469
	7667	3807	3860	1459	2300	3	10	1462	1469
	7667	3807	3860	1459	2400	3	9	1462	1468
	7667	3807	3860	1459	2500	3	9	1462	1468
	7667	3807	3860	1459	2600	3	8	1462	1467
	7667	3807	3860	1459	2700	3	8	1462	1467
	7667	3807	3860	1459	2800	3	8	1462	1467
	7667	3807	3860	1459	2900	3	8	1462	1467
	7667	3807	3860	1459	3000	2	7	1461	1466
	7667	3807	3860	1459	3500	2	6	1461	1465
	7667	3807	3860	1459	4000	2	5	1461	1464
	7667	3807	3860	1459	4500	2	5	1461	1464
	7667	3807	3860	1459	5000	1	4	1460	1463
	7667	3807	3860	1459	6000	1	4	1460	1463
	7667	3807	3860	1459	7000	1	3	1460	1462
	7667	3807	3860	1459	8000	1	3	1460	1462
	7667	3807	3860	1459	9000	1	2	1460	1461
	7667	3807	3860	1459	10000	1	2	1460	1461
	7667	3807	3860	1459	15000	0	1	1459	1460
	7667	3807	3860	1459	20000	0	1	1459	1460
	7667	3807	3860	1459	30000	0	1	1459	1460
	7667	3807	3860	1459	40000	0	1	1459	1460
	7667	3807	3860	1459	50000	0	0	1459	1459

*** W - refers to the dynamic width of U2 vehicle (refer to Figure 3.3)**

Table of Calculated Values

Figure 3.4 - Page 7 of 7

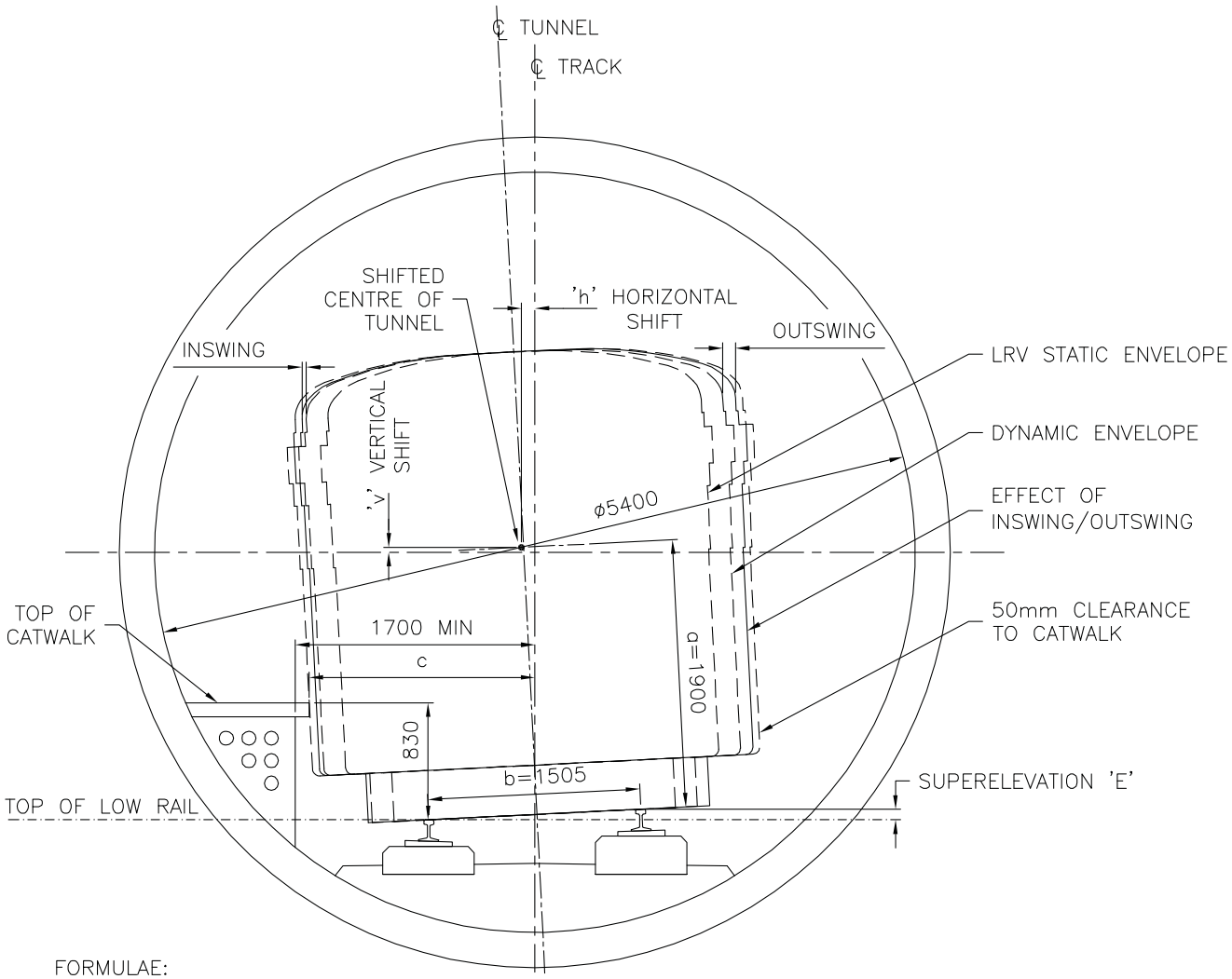

FORMULAE:

$v = 0.5\ E$

$h = \frac{a}{b} \times E$

c = 1/2 LRV DYNAMIC ENVELOPE
+ EFFECT OF INSWING/OUTSWING
+ EFFECT OF SUPERELEVATION
+ STRUCTURAL CLEARANCE TO CATWALK

WHERE:

a = HEIGHT OF VEHICLE ABOVE RAIL AT THE VERTICALY SHIFTED CENTRE OF TUNNEL
b = TRACK CENTRE TO CENTRE DISTANCE
v = VERTICAL SHIFT OF TUNNEL CENTRELINE RELATIVE TO TRACK CENTRELINE.
h = HORIZONTAL SHIFT OF TUNNEL CENTRELINE RELATIVE TO TRACK CENTRELINE.
c = U2 CLEARANCE TO TOP OF CATWALK FROM TRACK CENTRELINE.
1/2 LRV DYNAMIC ENVELOPE = (W/2 = 1459) AT FLOOR LEVEL.

CATWALK TOPPING INSWING/OUTSWING TO BE DETERMINED IN ACCORDANCE WITH 1/2 LRV DYNAMIC ENVELOPE (W/2 = 1459) AT FLOOR LEVEL.

		FIGURE 3.5	CHAPTER 3
		SUPERELEVATION EFFECTS ON CURVES	CLEARANCES AND ROW
		U2 VEHICLE	
Date	Revision		

Superelevation Effects

	Design Vehicle	U2		SD160	
	*Top Corner	*Top Corner	*Floor Level	*Top Corner	*Floor Level
Superelevation (mm)	Vehicle Tilting (mm)	Vehicle Tilting (mm)	Vehicle Tilting (mm)	Vehicle Tilting (mm)	Vehicle Tilting (mm)
5	11	10	3	10	3
10	23	19	6	21	6
15	34	29	9	31	9
20	45	39	12	41	12
25	56	49	16	52	16
30	68	58	19	62	19
35	79	68	22	72	22
40	90	78	25	83	25
45	102	87	28	93	28
50	113	97	31	103	31
55	124	107	34	114	34
60	136	116	37	124	37
65	147	126	40	135	40
70	158	136	43	145	44
75	169	146	47	155	47
80	181	155	50	166	50
85	192	165	53	176	53
90	203	175	56	186	56
100	226	194	62	207	62

Table of Calculated Values

Figure 3.6

*Note:

Design Vehicle's top corner = 3401 mm from top of rail
U2's top corner = 2912 mm from top of rail
U2's floor level = 943 mm from top of rail at AW4 loading
Siemens SD160 floor level = 937 mm from top of rail at AW4 loading
Siemens SD160's top corner (at camera position) = 3115 mm from top of rail

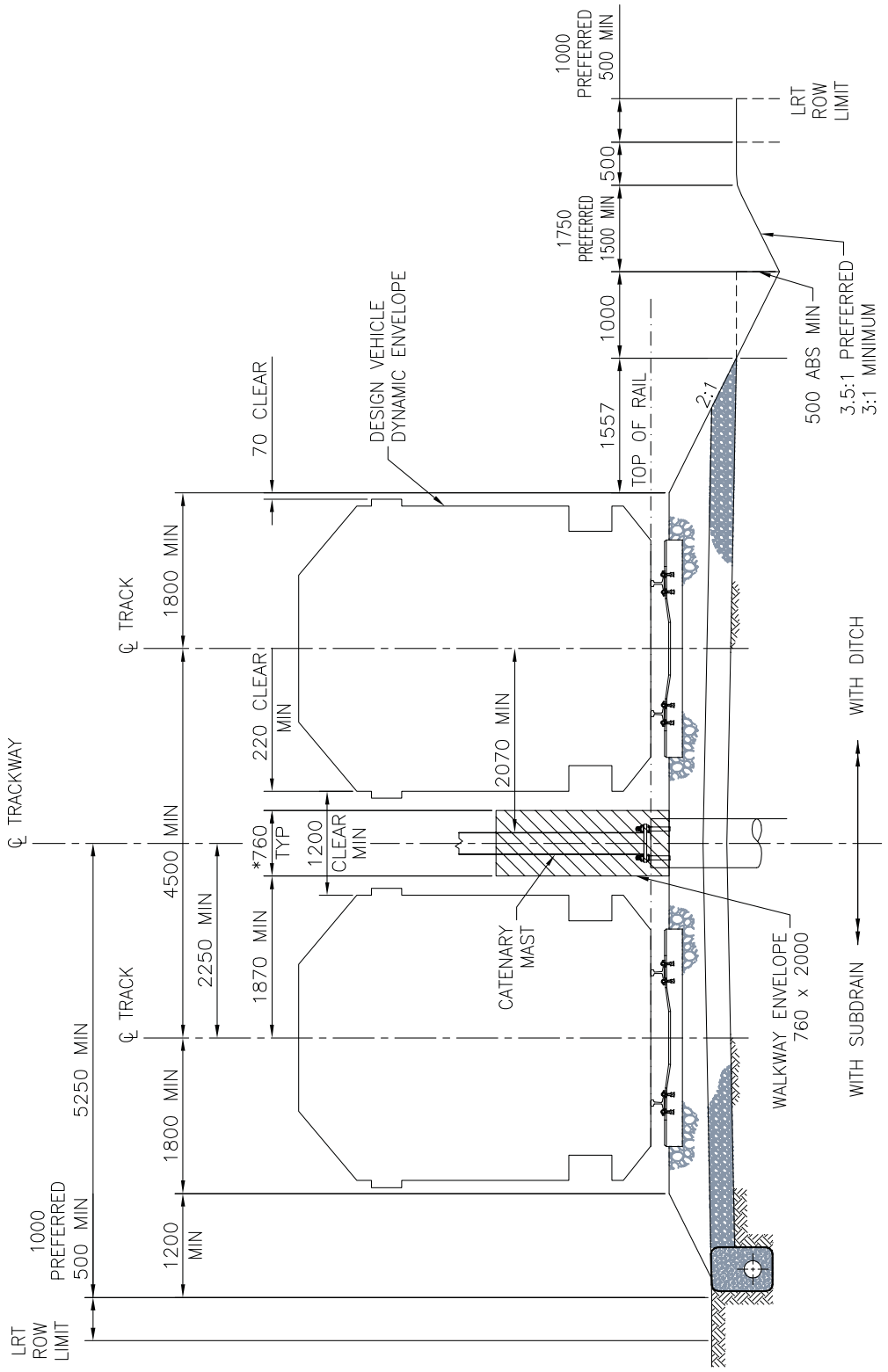

NOTES:
760 IS A TYPICAL DIMENSION ON TANGENT. IT WILL BE REDUCED ON CURVED TRACK DUE TO CURVATURE EFFECTS. ALSO APPLICABLE TO FIGURES 3.8, 3.13, 3.14, 3.15, 3.18, 3.21, AND 3.22.
REFER TO CH.3 APPENDIX 1 FOR MIN & PREFERRED ROW WIDTHS

		FIGURE 3.7 CLEARANCE ENVELOPE LEVEL TANGENT TRACK (OPEN)	CHAPTER 3 CLEARANCES AND ROW
DATE	REVISION		

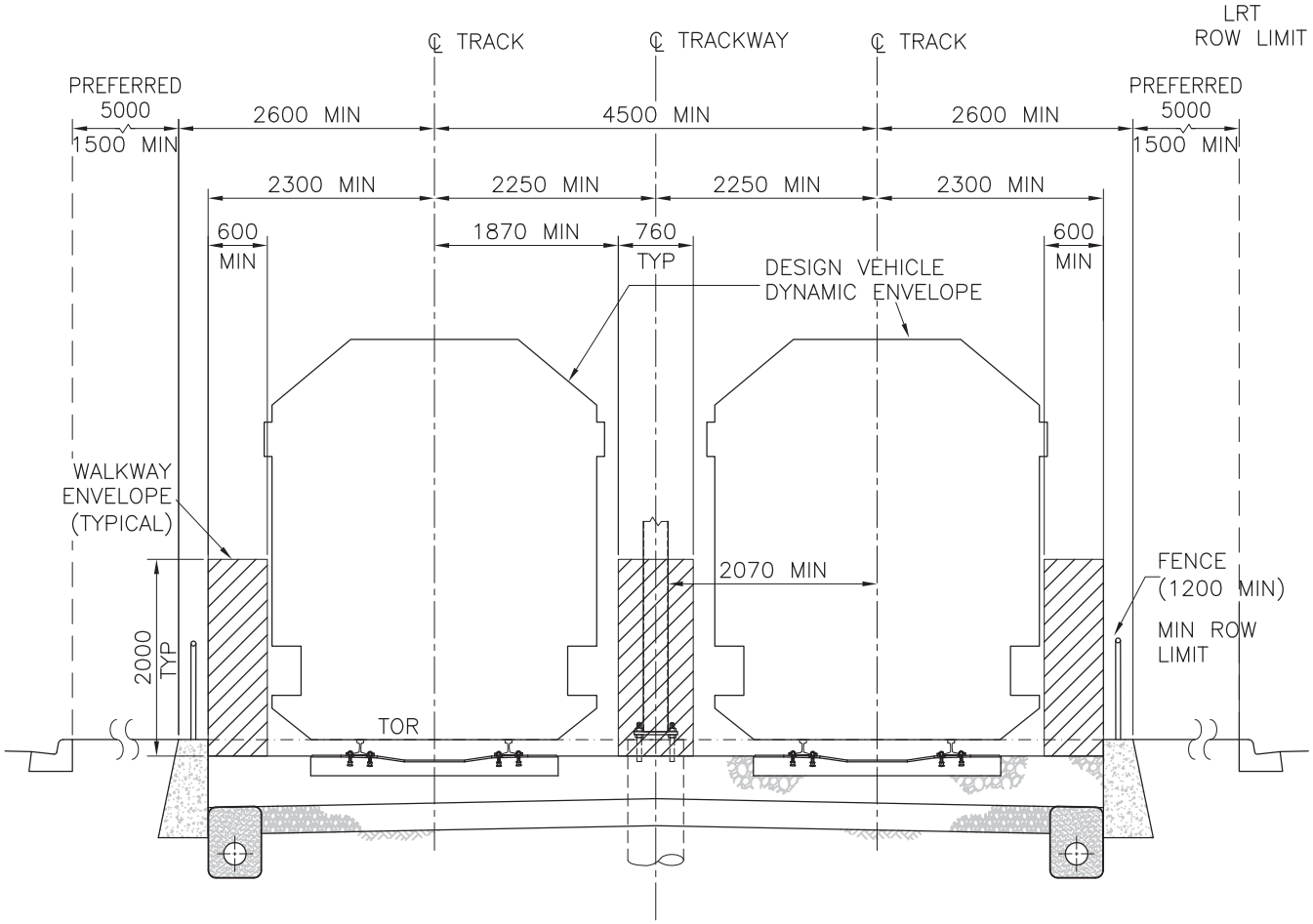

NOTES:

ALSO REFER TO FIGURE 5.6 AND CH.18 FIGURES FOR DIMENSIONAL REQUIREMENTS WHEN LRT IS LOCATED IN MEDIAN OF TYPICAL ARTERIAL ROADWAY WITH LEFT TURN BAYS AT INTERSECTION.
REFER TO CH.3 APPENDIX 1 FOR MIN. & PREFERRED ROW WIDTHS

		FIGURE 3.8 A	CHAPTER 3
		CLEARANCE ENVELOPE	CLEARANCES AND ROW
		LEVEL TANGENT TIE & BALLAST TRACK	
30-JUN-11	TITLE CHANGES	(SHARED USE)	
DATE	REVISION		

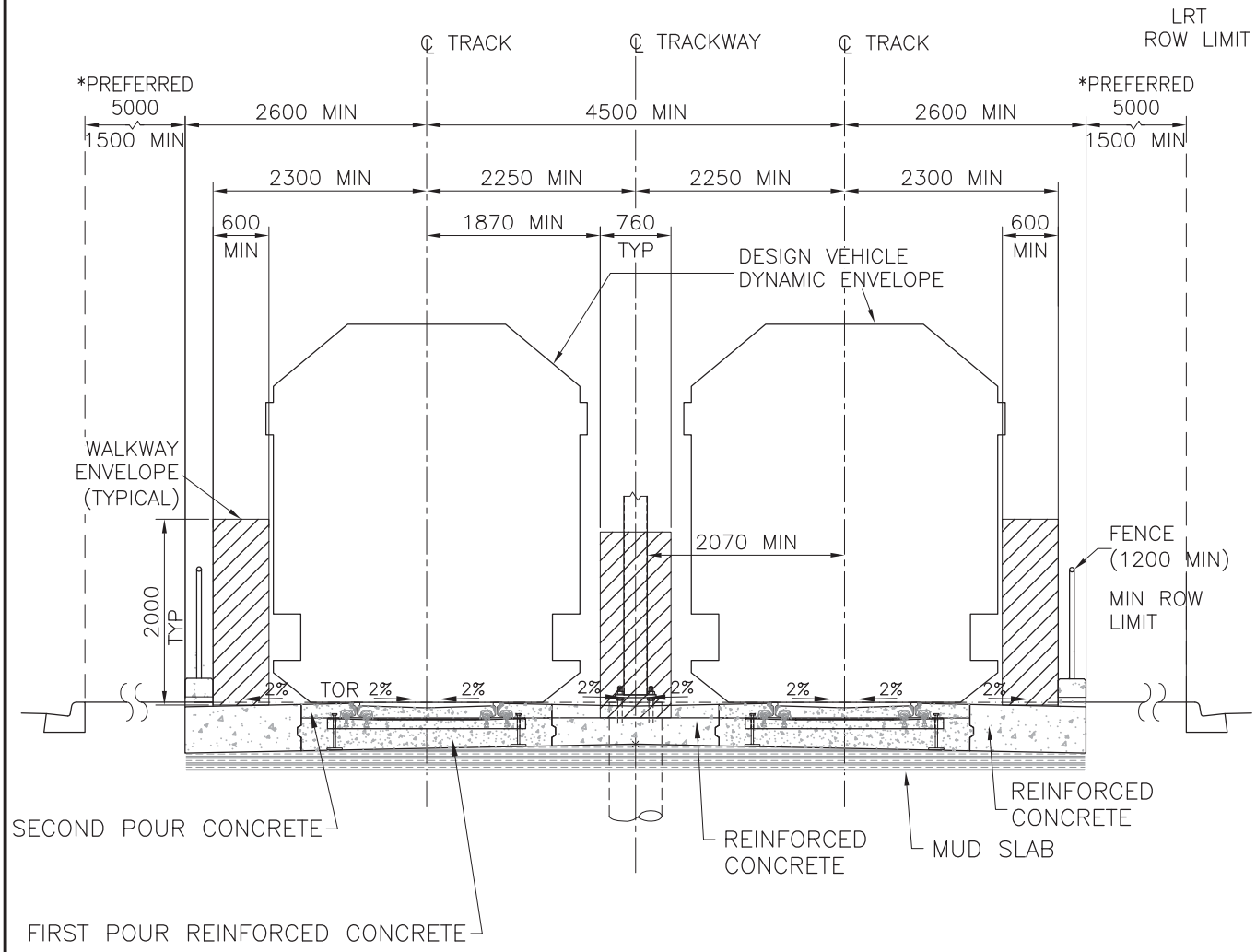

NOTES:

ALSO REFER TO FIGURE 5.6 AND CH.18 FIGURES FOR DIMENSIONAL REQUIREMENTS WHEN LRT IS LOCATED IN MEDIAN OF TYPICAL ARTERIAL ROADWAY WITH LEFT TURN BAYS AT INTERSECTION.

REFER TO CH.3 APPENDIX 1 FOR MIN. & PREFERRED ROW WIDTHS.

*THIS REQUIREMENT IS DEPENDENT ON THE ROAD ROW WIDTH.

		FIGURE 3.8 B	CHAPTER 3
		CLEARANCE ENVELOPE	CLEARANCES AND ROW
		LEVEL TANGENT EMBEDDED TRACK	
30-JUN-11	NEW	(SHARED USE)	
DATE	REVISION		

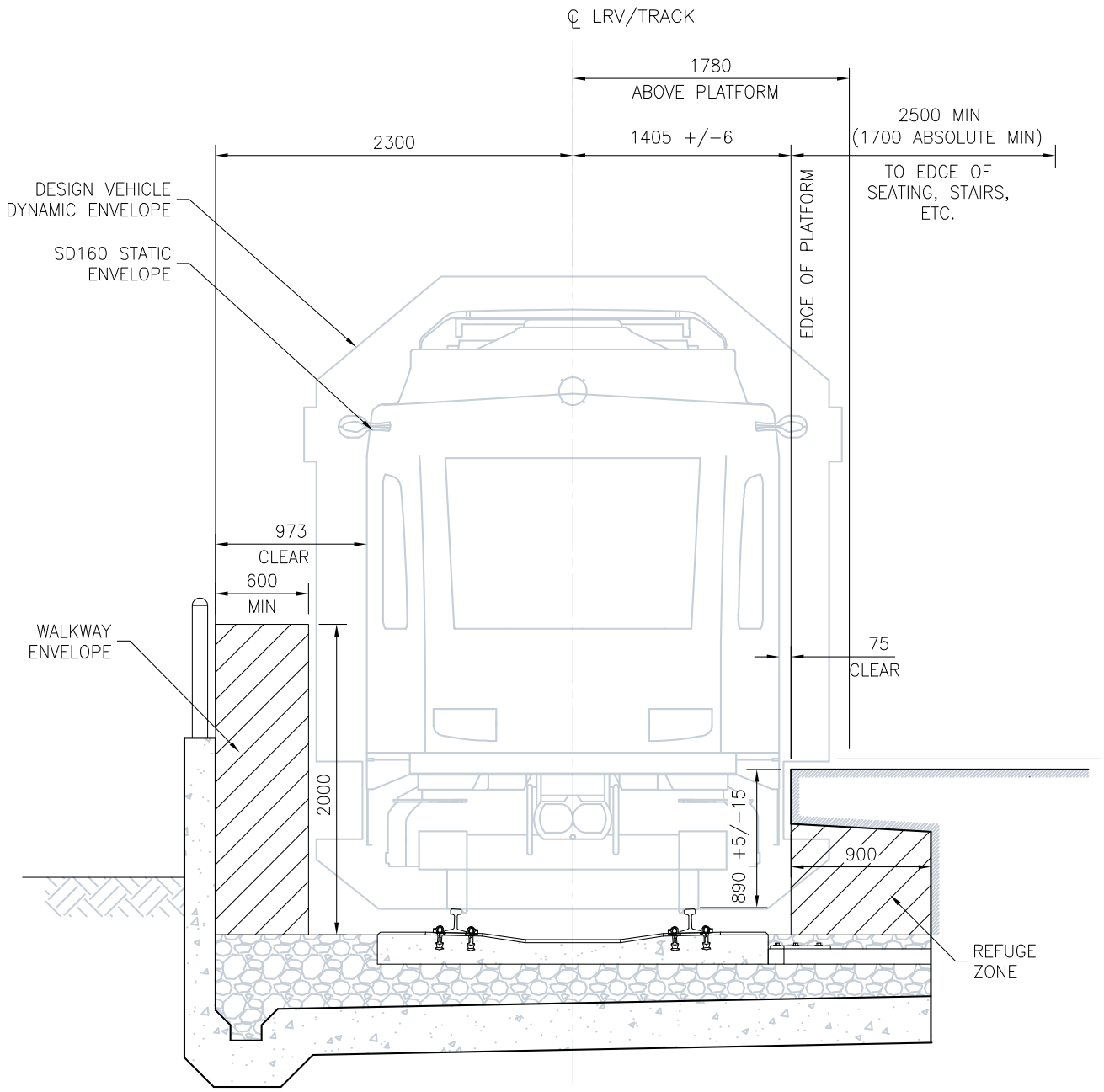

		FIGURE 3.9 CLEARANCE REQUIREMENTS AT STATION PLATFORM	CHAPTER 3 CLEARANCES AND ROW
DATE	REVISION		

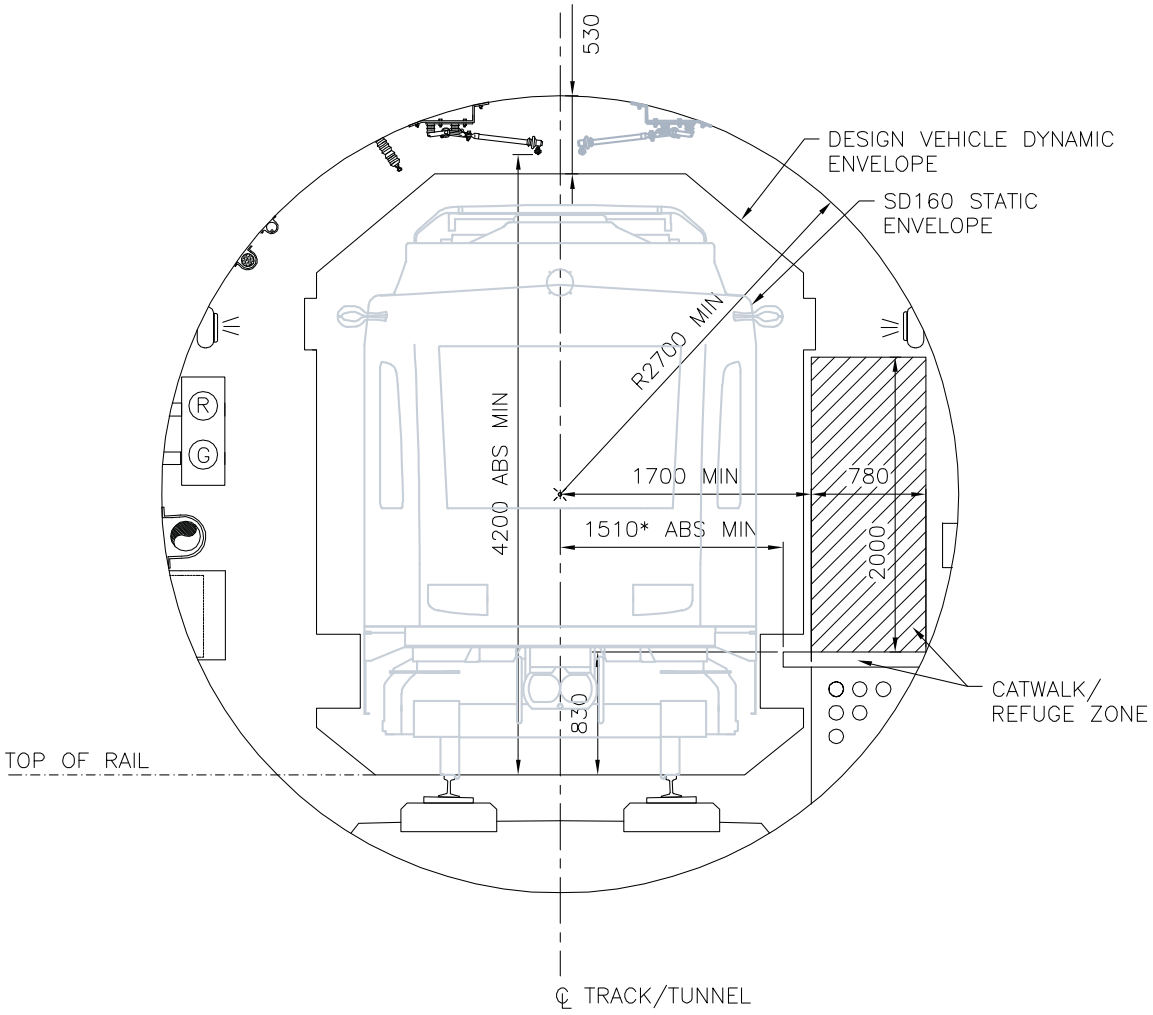

NOTES:
ALTERNATING CATENARY CONNECTORS SCREENED BACK

* THE ABSOLUTE MINIMUM DIMENSION IS BASED ON TANGENT TRACK WITH NO SUPERELEVATION.

		FIGURE 3.10	CHAPTER 3
		CLEARANCE ENVELOPE LEVEL TANGENT TRACK	CLEARANCES AND ROW
		(TBM TUNNEL)	
Date	Revision		

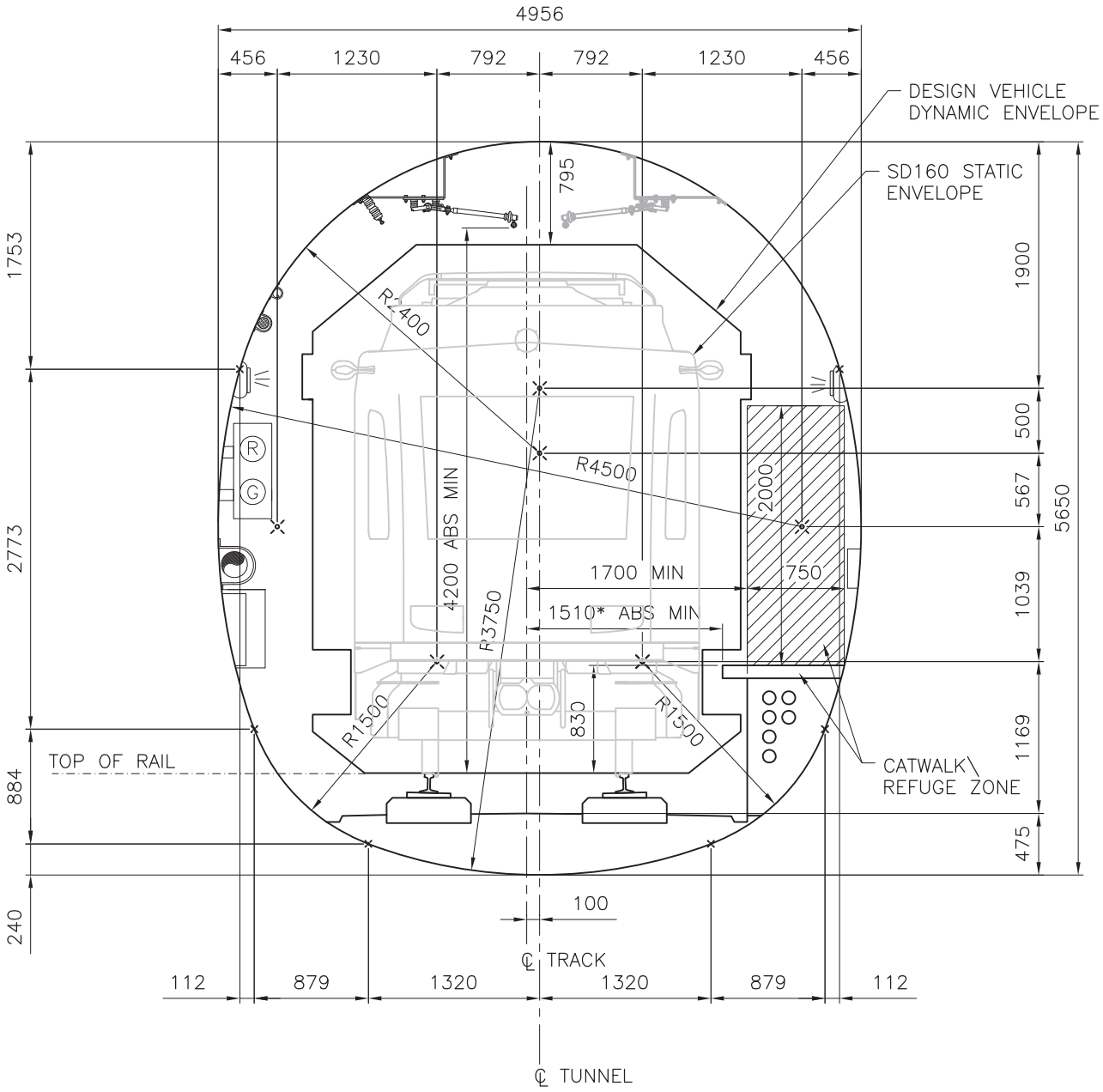

NOTES:
* THE ABSOLUTE MINIMUM DIMENSION IS BASED ON TANGENT TRACK WITH NO SUPERELEVATION.

		FIGURE 3.11	CHAPTER 3
		CLEARANCE ENVELOPE LEVEL TANGENT TRACK	CLEARANCES AND ROW
Date	Revision	(SEM TUNNEL)	

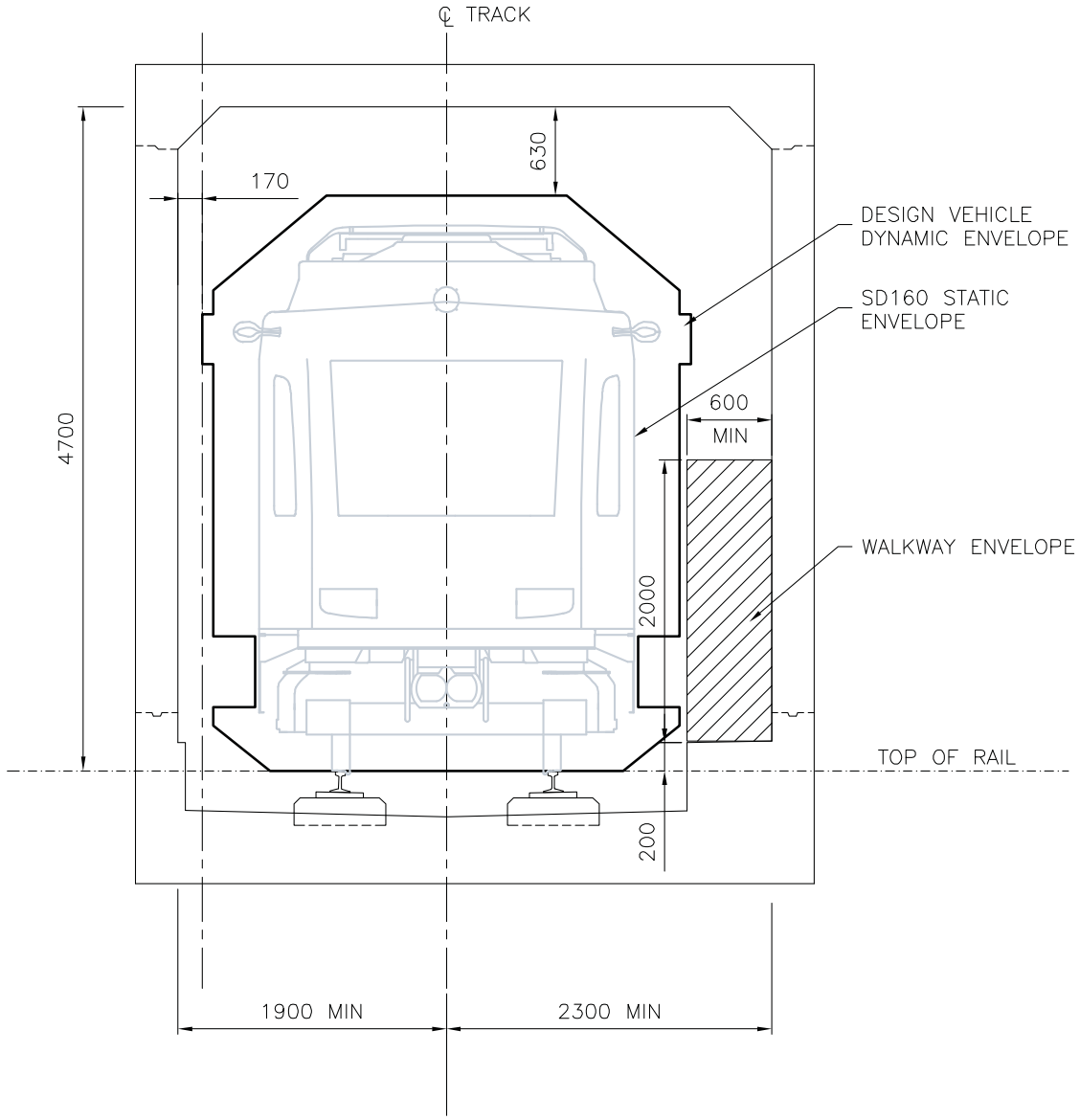

		FIGURE 3.12	CHAPTER 3
		CLEARANCE ENVELOPE LEVEL TANGENT TRACK	CLEARANCES AND ROW
Date	Revision	(UNDERGROUND SINGLE BOX)	

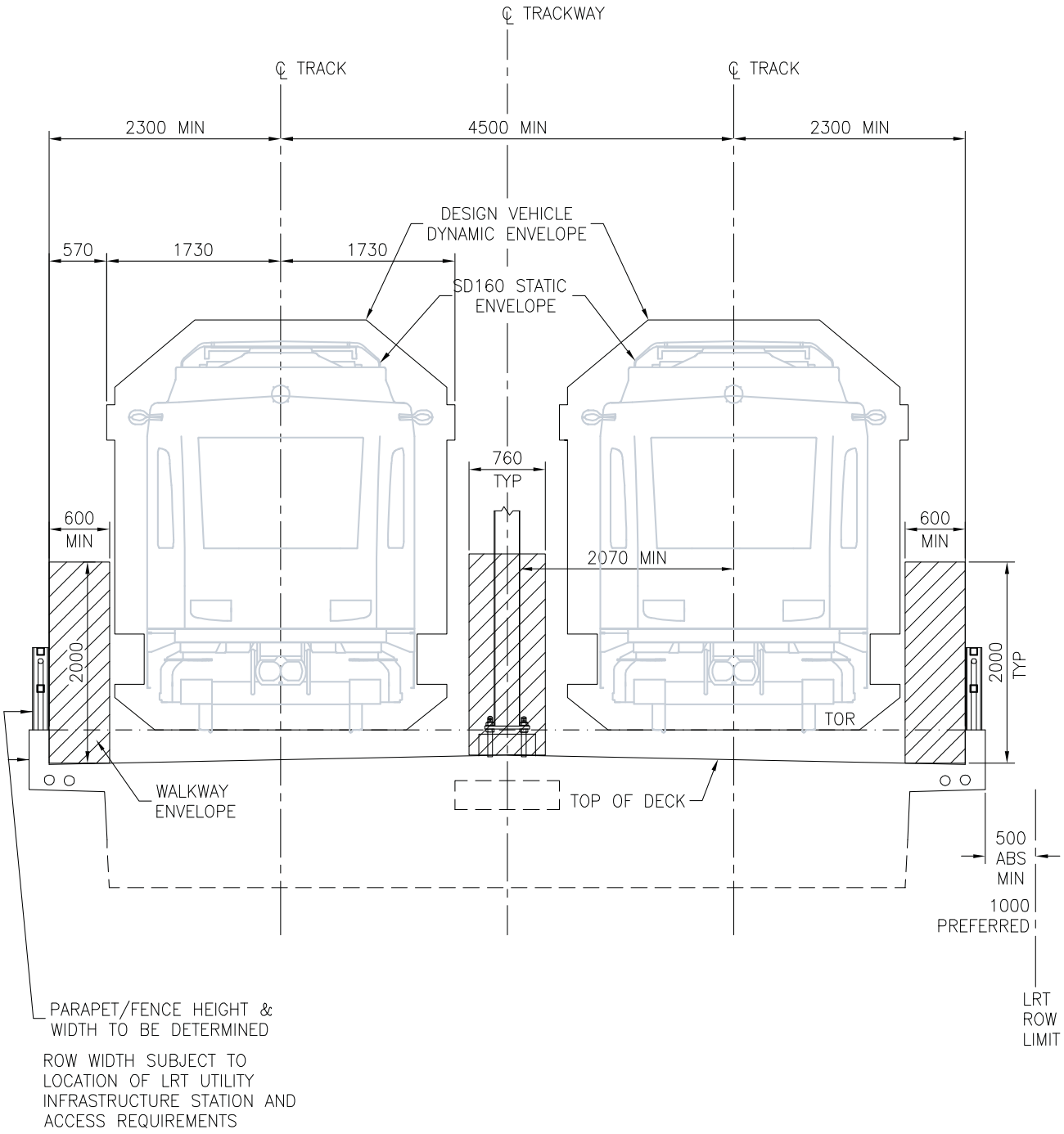

		FIGURE 3.13	CHAPTER 3
		CLEARANCE ENVELOPE LEVEL TANGENT TRACK	CLEARANCES AND ROW
DATE	REVISION	(ELEVATED STRUCTURE)	

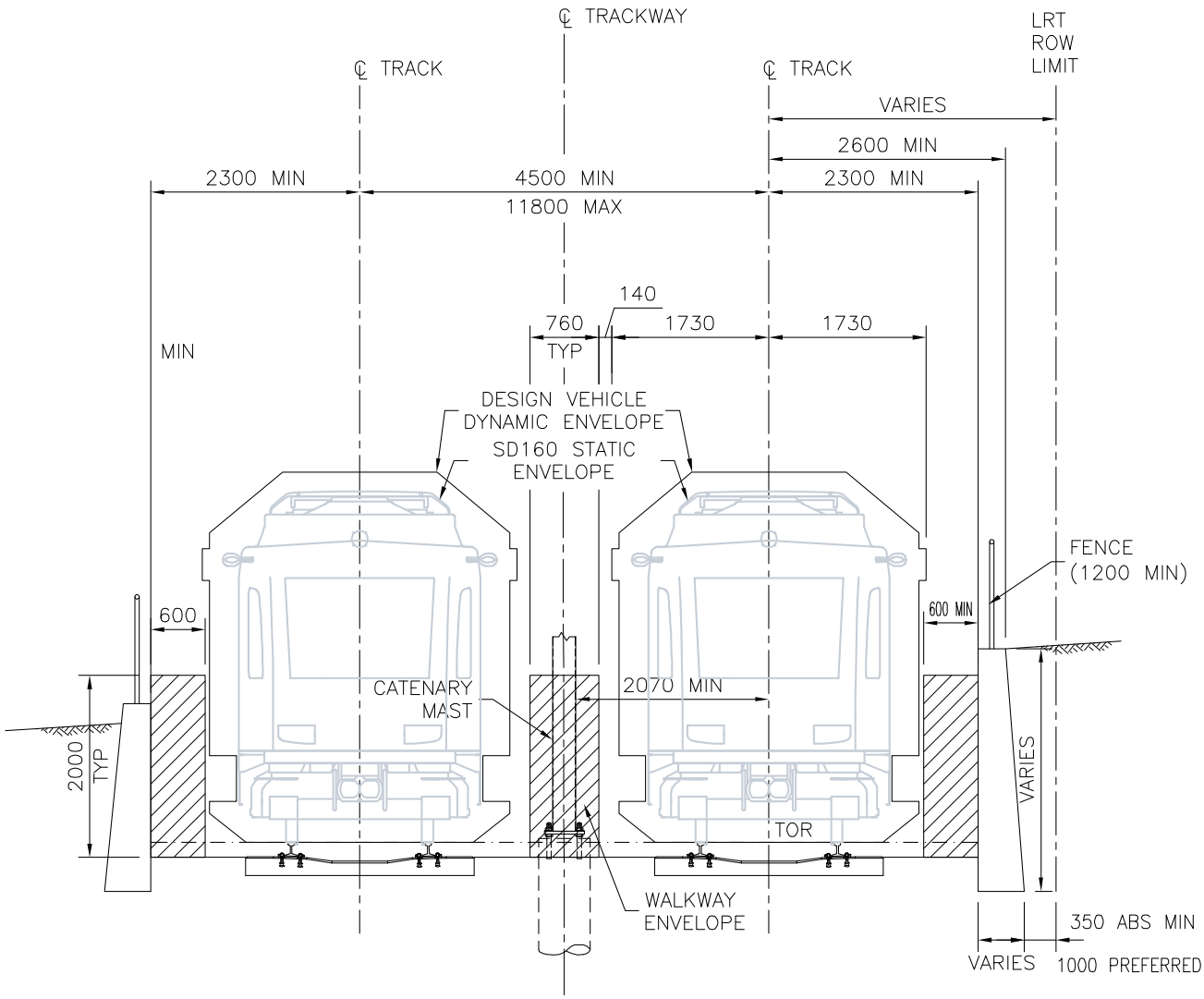

NOTE:
LRT ROW LIMIT WILL BE DEPENDENT ON TOPOGRAPHY AND RETAINING WALL FOOTING DESIGN.

		FIGURE 3.14	CHAPTER 3
		CLEARANCE ENVELOPE LEVEL TANGENT TRACK (RETAINED CUT)	CLEARANCES AND ROW
DATE	REVISION		

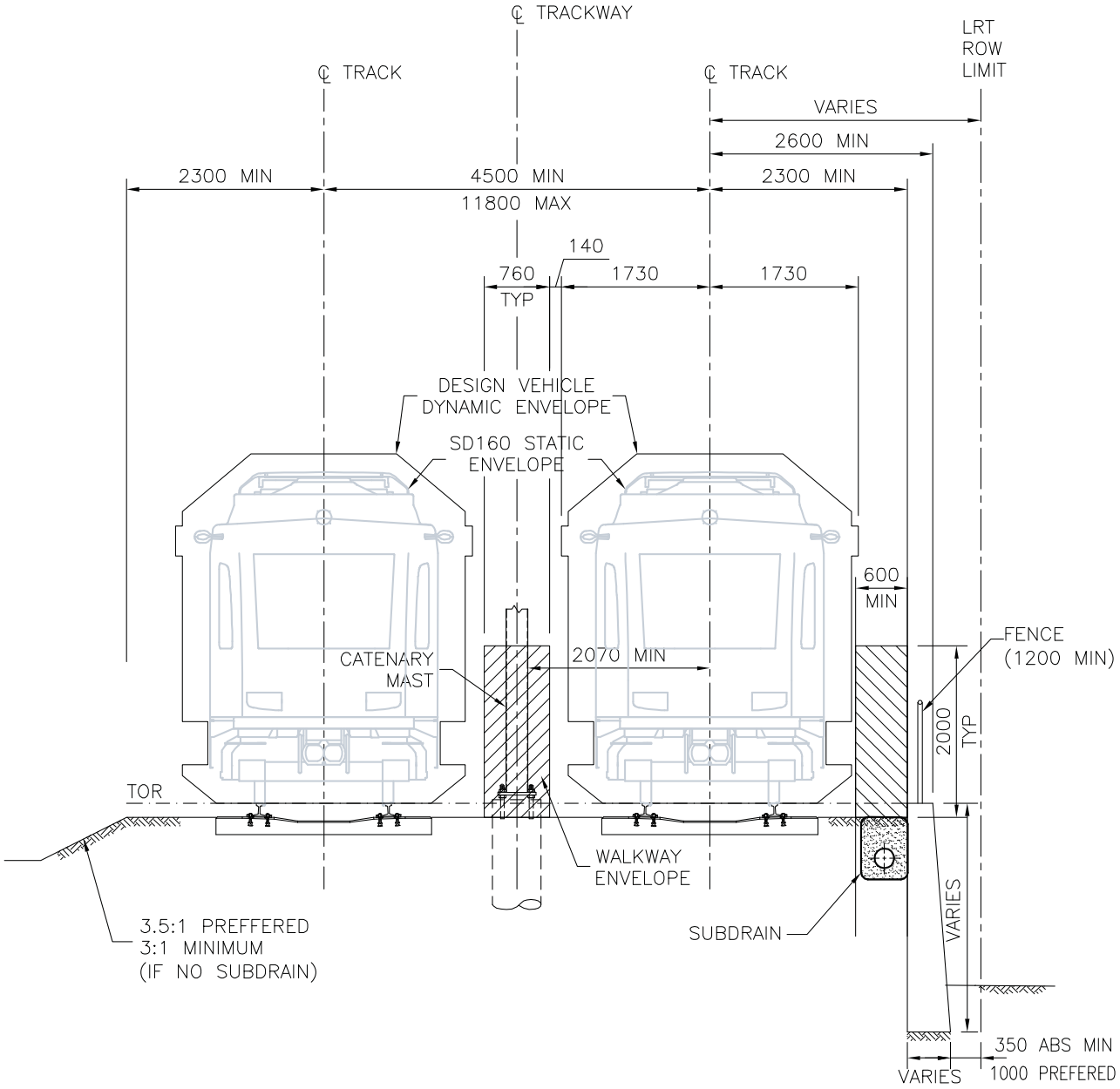

NOTE:
LRT ROW LIMIT WILL BE DEPENDENT ON TOPOGRAPHY AND RETAINING WALL FOOTING DESIGN.

		FIGURE 3.15	CHAPTER 3
		CLEARANCE ENVELOPE LEVEL TANGENT TRACK (RETAINED FILL)	CLEARANCES AND ROW
DATE	REVISION		

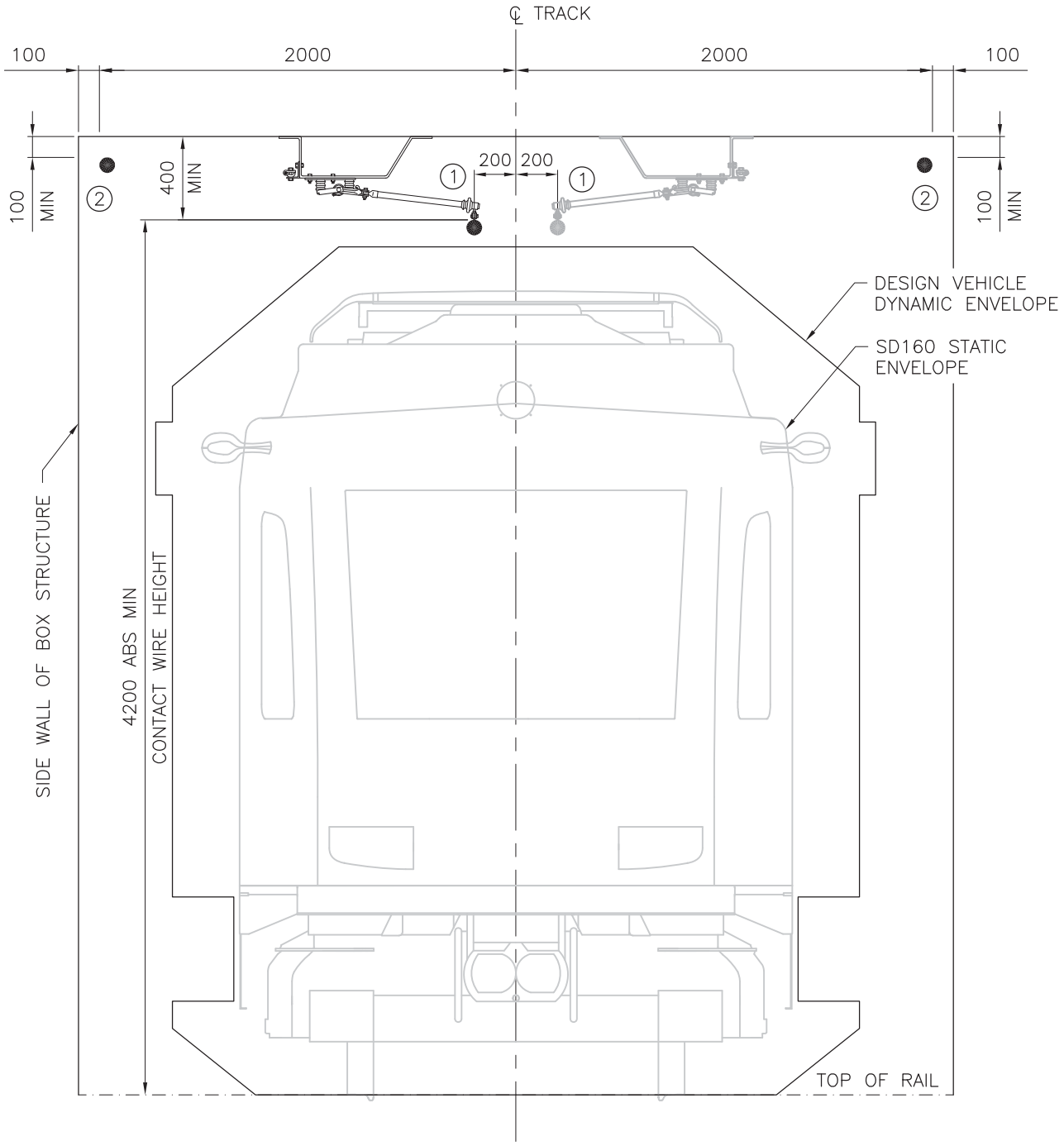

NOTES:
CONTACT WIRE WILL BE ON BOTH SIDES OF CENTRELINE AT ANY GIVEN ALIGNMENT
ONLY ONE FEEDER IS REQUIRED AND MAY BE LOCATED ON EITHER SIDE ON TANGENT TRACK
–MUST BE ON OUTSIDE IN CURVES

		FIGURE 3.16	CHAPTER 3
		VERTICAL CLEARANCE TO OVERHEAD CATENARY	CLEARANCES AND ROW
Date	Revision		

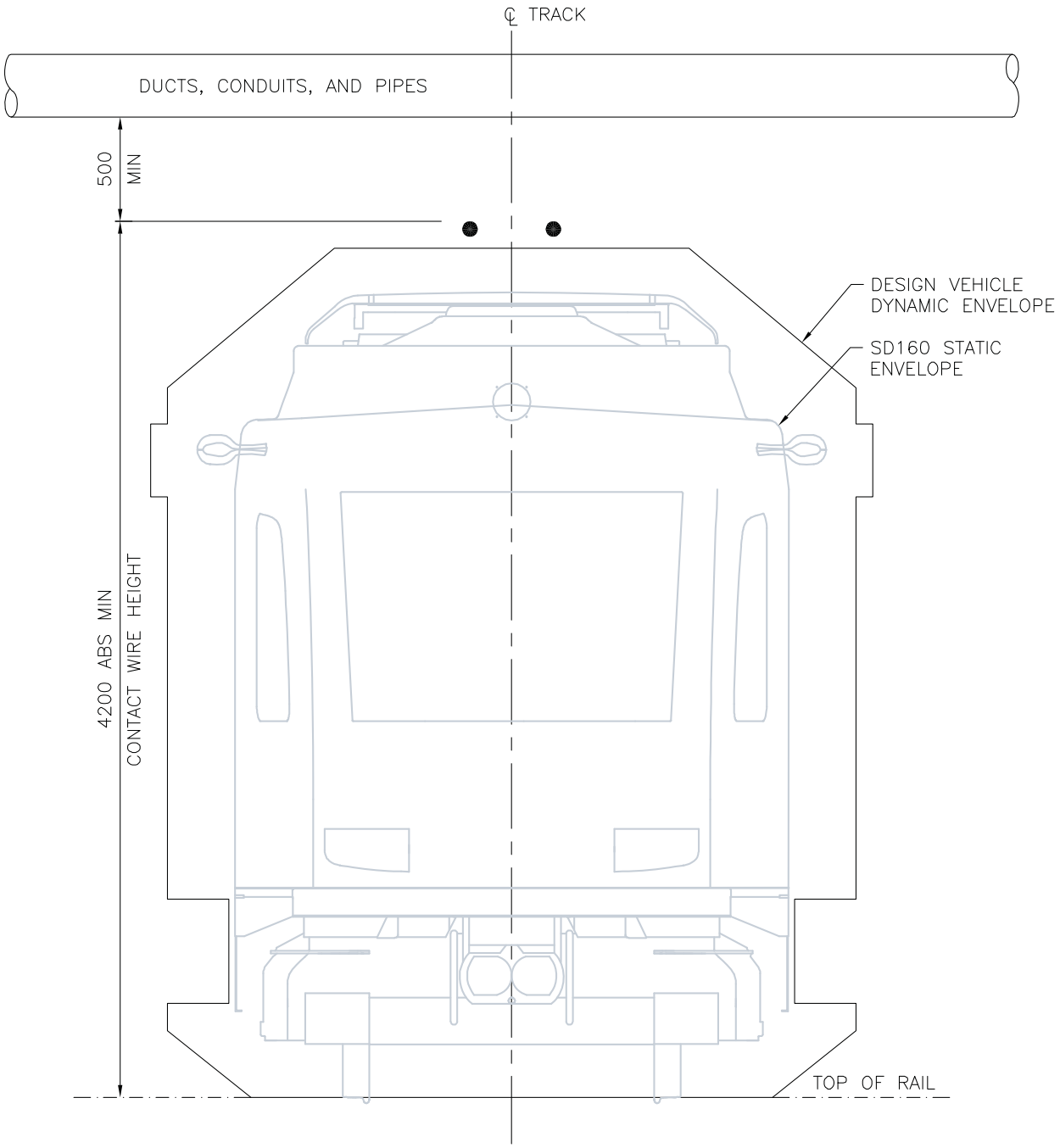

NOTES:
DUCTS, CONDUITS, AND PIPES SHOULD CROSS THE TRACK AT RIGHT ANGLES TO MINIMIZE INTERFERENCE.
BOTTOM OF DUCT, CONDUIT, OR PIPE TO BE 500 mm ABOVE CONTACT WIRE.

		FIGURE 3.17	CHAPTER 3
		VERTICAL CLEARANCE TO UTILITIES CROSSING OVERHEAD CATENARY	CLEARANCES AND ROW
Date	Revision		

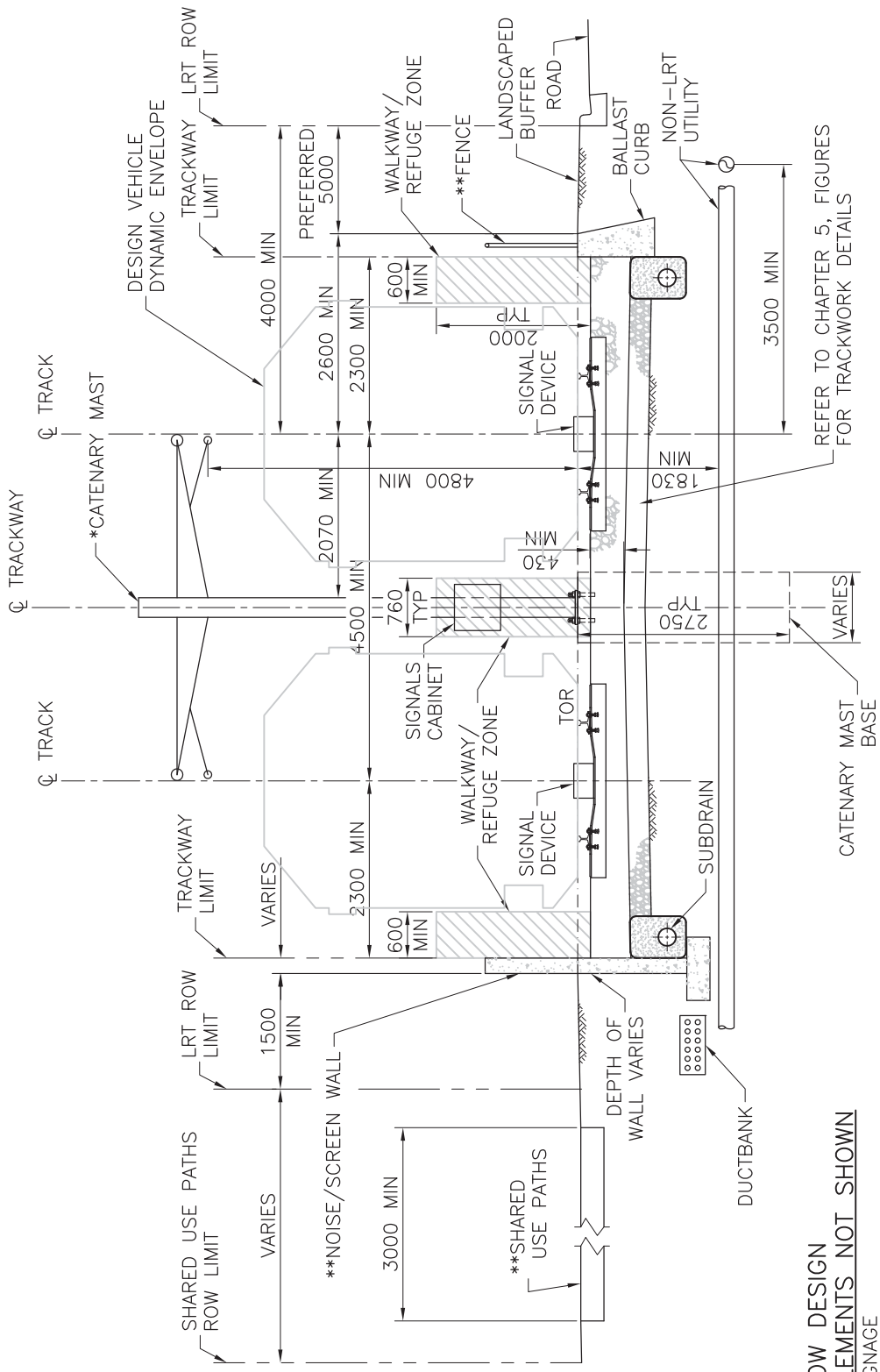

NOTES: CATENARY MAST MAY BE LOCATED TO THE OUTSIDE BOUNDARIES OF TRACKWAY WHEN TRACK CENTRELINE IS GREATER THAN 4500 mm.

HEIGHT\MATERIAL DEPENDENT ON LOCATION.

		FIGURE 3.18 A TYPICAL SECTION COMBINED MAJOR TRACKWAY ELEMENTS SHARED USE ROW	CHAPTER 3 CLEARANCES AND ROW
30-JUN-11	TITLE CHANGE		
DATE	REVISION		

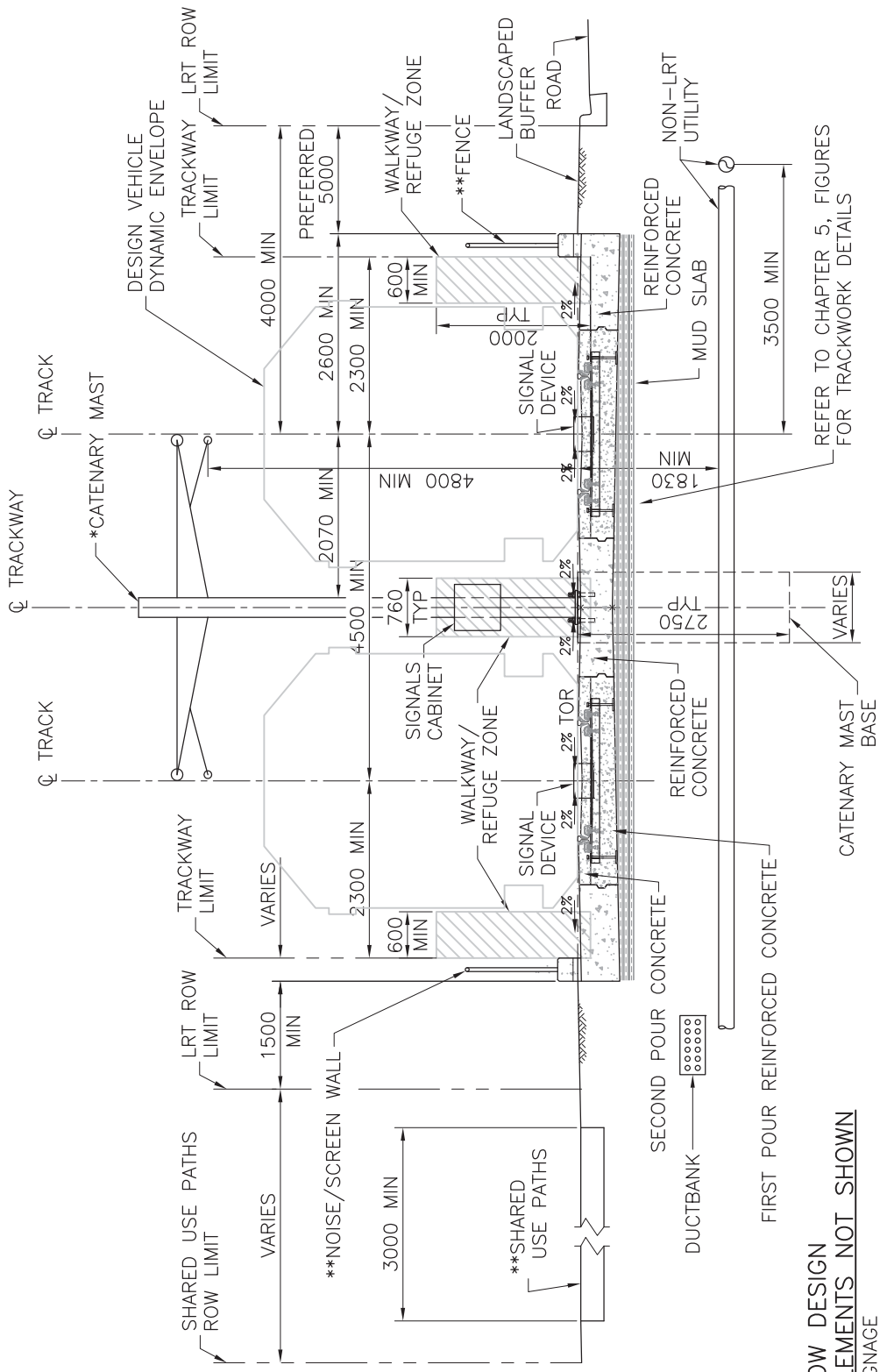

NOTES:
CATENARY MAST MAY BE LOCATED TO THE OUTSIDE BOUNDARIES OF TRACKWAY WHEN TRACK CENTRELINE IS GREATER THAN 4500 mm.
HEIGHT\MATERIAL DEPENDENT ON LOCATION.

REFER TO CH.3 APPENDIX FOR MIN. AND PREF. ROW WIDTHS

		FIGURE 3.18 B	CHAPTER 3
		TYPICAL SECTION	CLEARANCES AND ROW
		EMBEDDED MAINLINE TRACKWAY	
30-JUN-11	NEW	ELEMENTS SHARED USE ROW	
DATE	REVISION		

NOTE
1. THE ABSOLUTE MINIMUM DIMENSION IS BASED ON TANGENT TRACK WITH NO SUPERELEVATION.
2. DIMENSIONS SHOWN (THUS) UNDER UTILITY ARE TYPICAL AND ARE MEASURED FROM TOR TO THE UNDERSIDE OF THE UTILITY DEVICE.

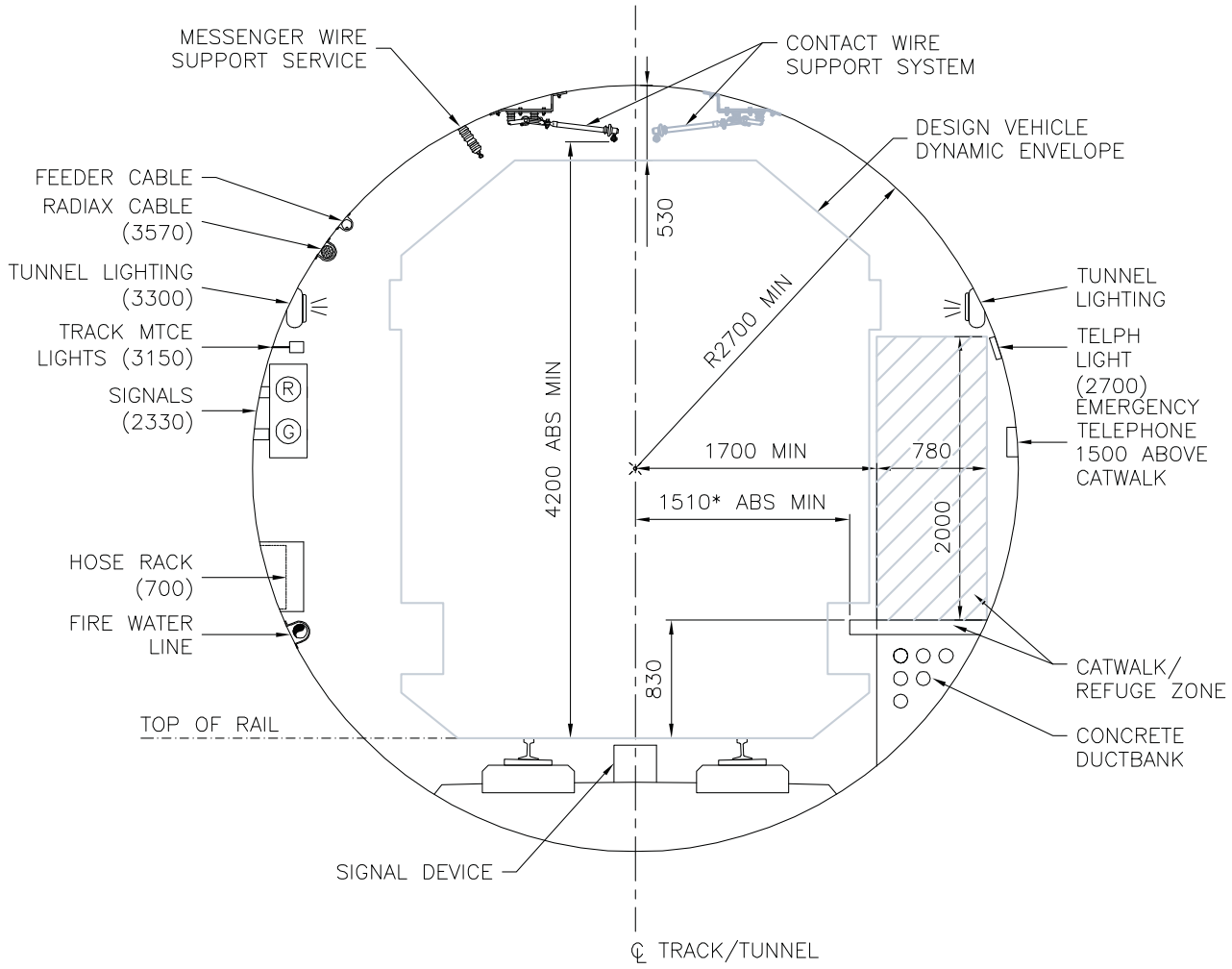

ROW DESIGN
ELEMENTS NOT SHOWN
SIGNAGE
VAULTS
CATCH BASINS

		FIGURE 3.19	CHAPTER 3
		TYPICAL SECTION	CLEARANCES & ROW
		COMBINED MAJOR TRACKWAY ELEMENTS	
		TBM TUNNEL	
Date	Revision		

NOTE

1. REFER TO FIGURE 3.17 FOR CLEARANCE TO OVERHEAD DUCTS, CONDUITS, AND PIPES.
2. *2300 OFFSET REQUIRED WHEN UTILITY SERVICES MOUNTED ON BOX STRUCTURE WALL, OTHERWISE 1900 CAN BE PROVIDED. REFER TO FIGURE 3.12.
3. DIMENSIONS SHOWN (THUS) UNDER UTILITIES ARE TYPICAL AND ARE MEASURED FROM TOR TO THE UNDERSIDE OF THE UTILITY DEVICE.

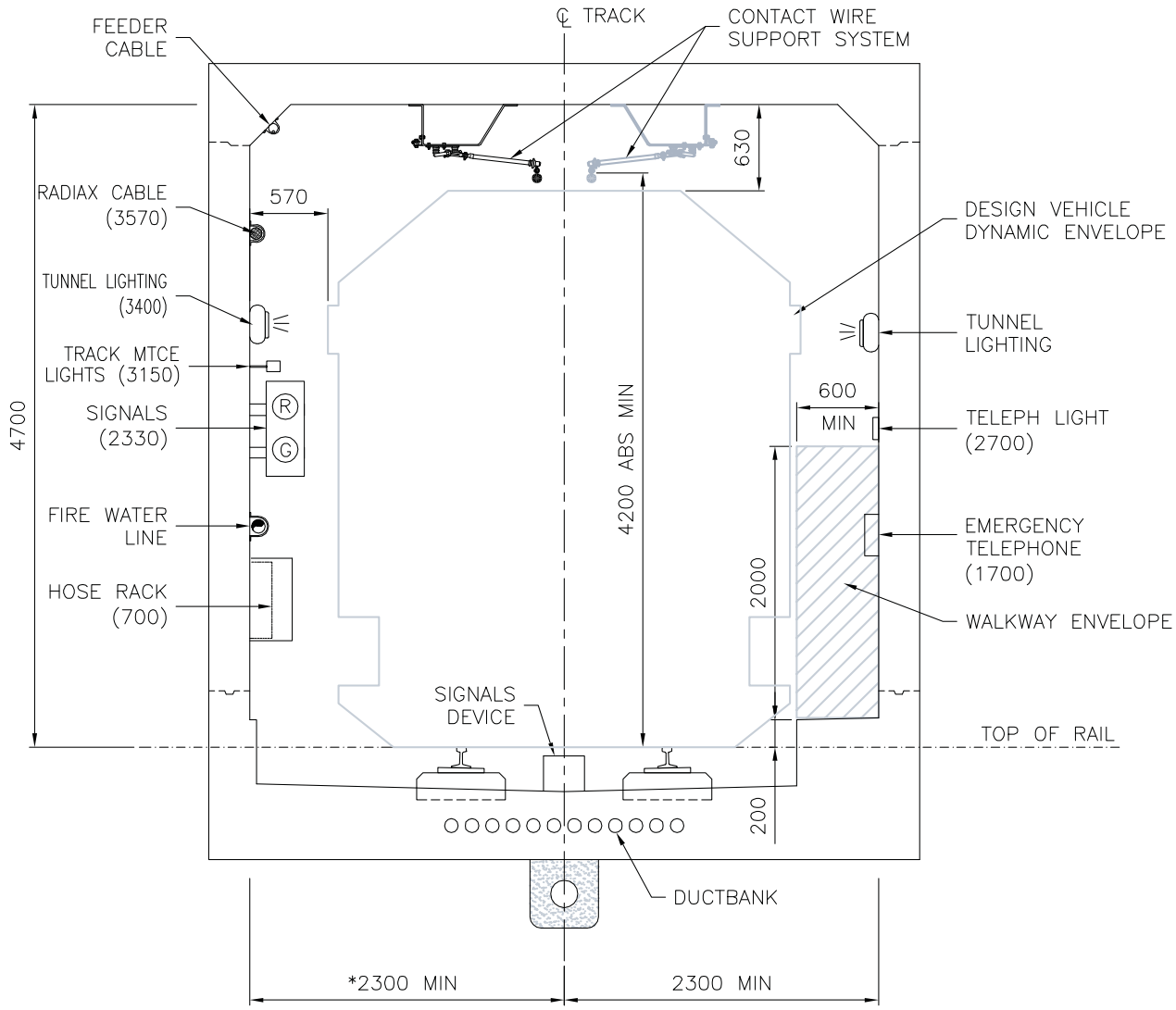

ROW DESIGN
ELEMENTS NOT SHOWN
SIGNAGE
VAULTS
CATCH BASINS

		FIGURE 3.20	CHAPTER 3
		TYPICAL SECTION	CLEARANCES AND ROW
		COMBINED MAJOR TRACKWAY ELEMENTS	
Date	Revision	UNDERGROUND SINGLE BOX	

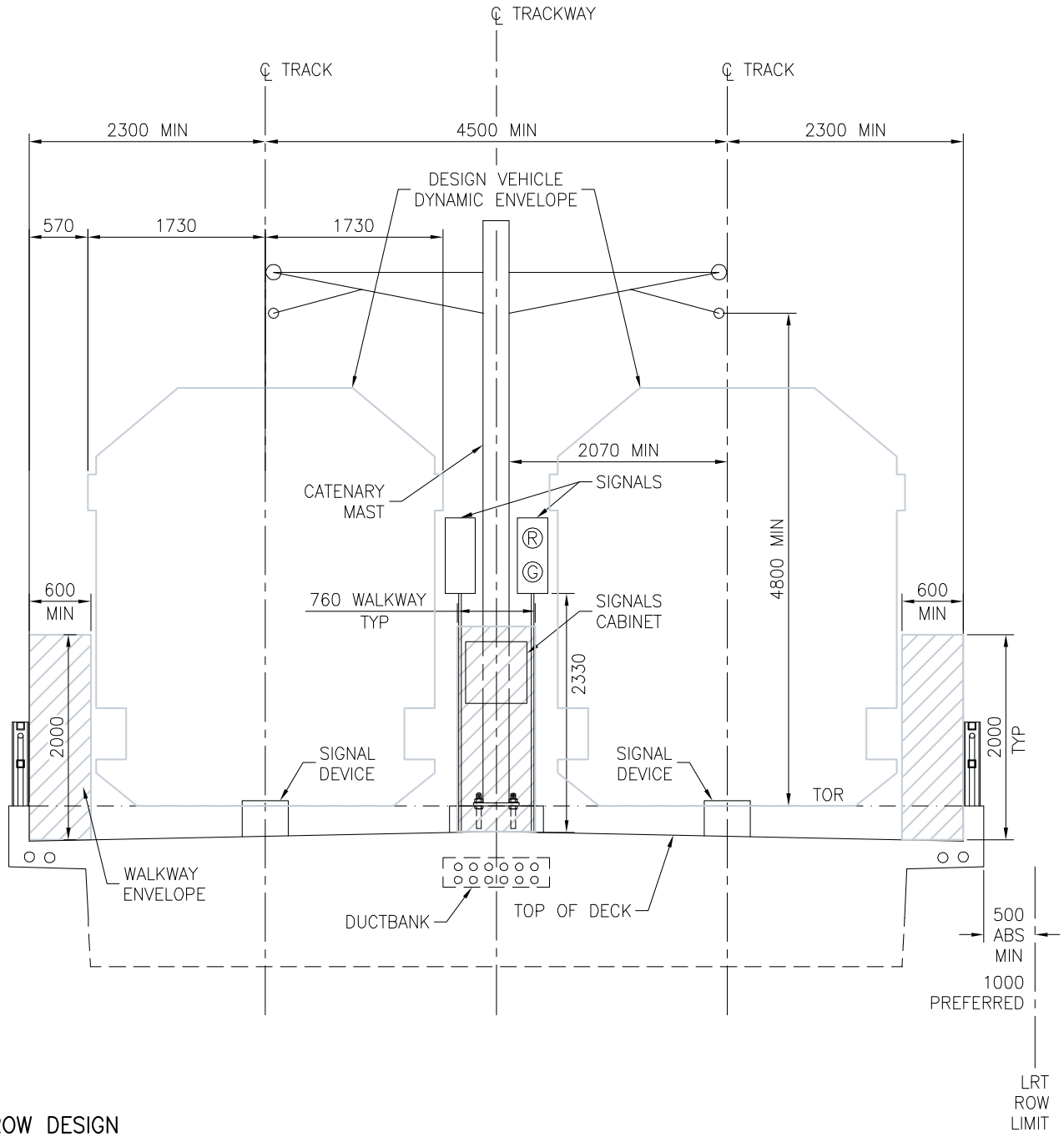

ROW DESIGN
ELEMENTS NOT SHOWN
SIGNAGE
VAULTS
MAST ANCHORAGE SYSTEM
SWITCH MACHINES

NOTE:
REFER TO CH.3 APPENDIX FOR MIN & PREFERRED ROW WIDTHS

		FIGURE 3.21	CHAPTER 3
		TYPICAL SECTION	CLEARANCES AND ROW
		COMBINED MAJOR TRACKWAY ELEMENTS	
		ELEVATED STRUCTURE	
DATE	REVISION		

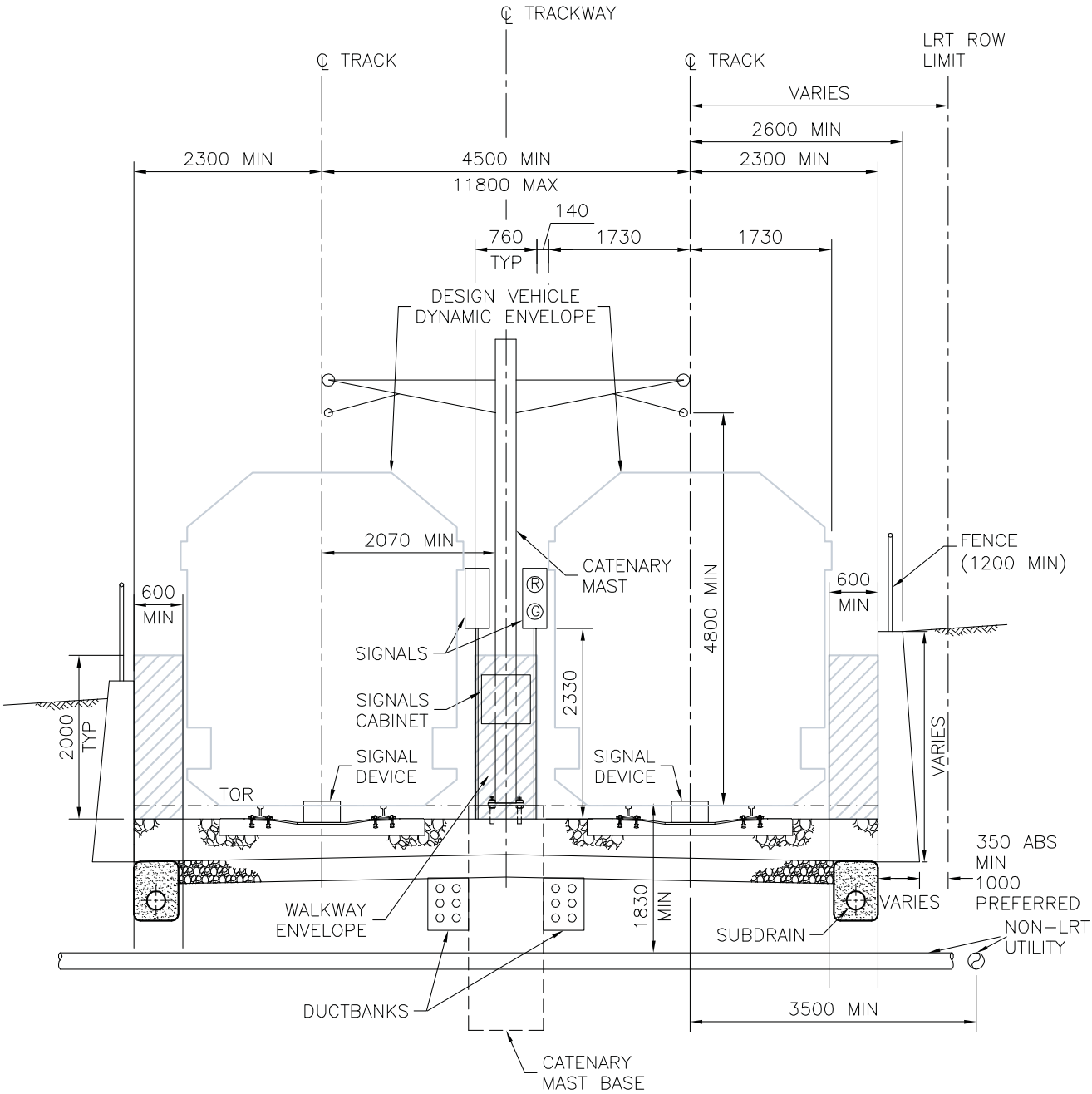

ROW DESIGN
ELEMENTS NOT SHOWN
SIGNAGE
VAULTS
CATCH BASINS
STREET LIGHTS
MAST ANCHORAGE SYSTEM

NOTE:
ROW LIMIT WILL BE DEPENDENT ON TOPOGRAPHY AND RETAINING WALL FOOTING DESIGN.

		FIGURE 3.22	CHAPTER 3
		TYPICAL SECTION	CLEARANCES AND ROW
		COMBINED MAJOR TRACKWAY ELEMENTS	
		PORTAL/RETAINED CUT	
DATE	REVISION		

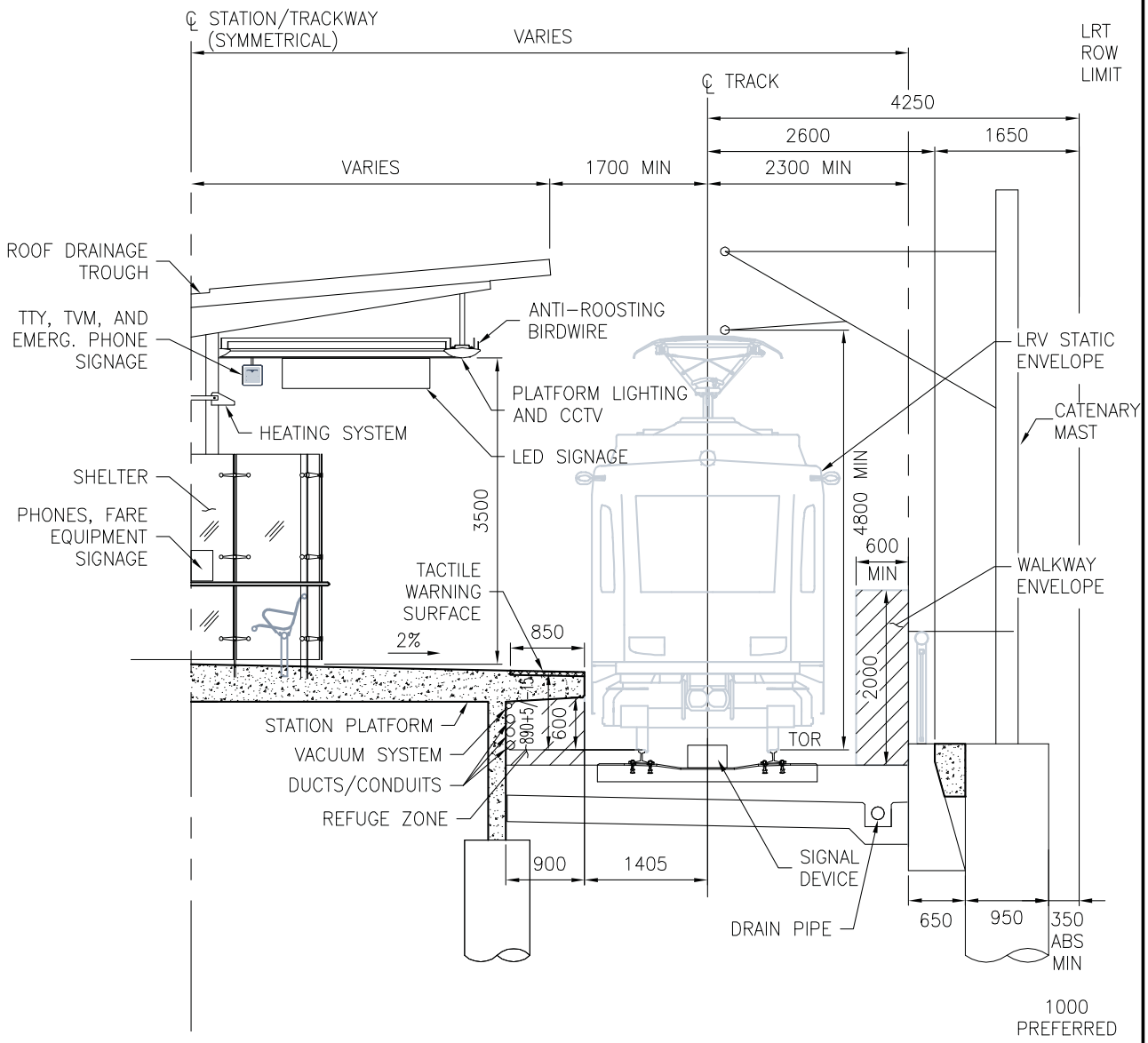

ROW DESIGN
ELEMENTS NOT SHOWN

VAULTS
CATCH BASINS
STREET LIGHTS
MAST ANCHORAGE SYSTEM
SIGNAL MASTS

NOTE:
REFER TO CH.3 APPENDIX 1 FOR MIN. AND PREFERRED ROW WIDTHS.

		FIGURE 3.23	CHAPTER 3
		TYPICAL SECTION	CLEARANCES AND ROW
		COMBINED MAJOR TRACKWAY ELEMENTS	
Date	Revision	TYPE III STATION (WITH ROOF)	

Appendix I

Minimum and Preferred ROW Widths for Sample of Typical LRT Mainline Level Tangent Trackway Cross Section Configurations

1-TRACKWAY OPEN AREA		Minimum ROW mm	Preferred ROW mm	Details of Dimensions
1A - Basic Trackway with Ditches - (refer to Figs. 3.7 & 5.4)				
i) Min. distance from centreline of trackway to ROW limit: 6607(2250+1800+1557+1000)+1500+500+500=9107				2250-dist. from centre of trackway to centre of track:1800-dist fr.centre of track to top edge ballast
Min. ROW:	9107x2=18215 rd'd (based on 3:1 sideslope)	**18,215**		1557+1000-dist. Fr. top edge of ballast to bottom of ditch:6607 dist. Fr. Centre of trkwy to center of ditch
(Option available to locate all ductbanks between tracks or Comm ductbank at top of ditch slope)				1500 - 3:1 min sideslope farside of ditch
				500 - rounding at top of ditch
				500 - minimum offset from rounding to min. LRT ROW limit
ii) Preferred distance from Track Center to ROW Limit:6607+1750+500+1000=9857				6607 - dist. From centre of trkwy to centre of ditch
Preferred ROW:	9857x2=19715 (based on 3.5/1 sideslope)		**19,715**	1750 -31/2:1 preferred sideslope farside of ditch
(Option available to locate all ductbanks between tracks or Comm ductbank at top of ditch slope)				500 - rounding at top of ditch
				1000-preferred offset from rounding to preferred ROW limit
1B - Basic Trackway with subdrains (refer to Fig.3.7)				
i) Abs. Min. distance from centreline of trackway to ROW limit: 2250+1800+1200+500=5750				2250 - distance from centreline of trkwy to centreline of track
Abs. Min. ROW:	5750x2=11500	**11,500**		1800 - distance from centreline of track to top outside edge of track ballast
(All ductbanks located between tracks, width marginally adequate to house wayside equip.				1200 - distance from top edge of ballast to the outside edge of subdrain
				500 - minimum offset from outside edge of subdrain to min. LRT ROW Limit
ii)Preferred distance from Tkwy centre to ROW Limit:2250+1800+1200+1000=6250				
Preferred ROW:	6250x2=12500 (All ductbanks between tracks)		**12,500**	1000 - preferred offset from outside of ductbank to LRT ROW limit
iii) Preferred dist.from Trkwy centre to ROW Limit on ductbank side:2250+1800+1200+1950+500+1000=8700				1950 - distance from outside edge of subdrain to centre of typical 1000 comm. ductbank
Preferred ROW:	6250+8700=14950		**14,950**	500-distance from centre of ductbank for farside edge of ductbank
(Locate Comm. Ductbank on one side of Trackway and provide 1000 offset to ROW Limit)				1000 - preferred offset from farside edge of ductbank to preferred LRT ROW limit
1C - Basic Curbed Trackway (refer to Fig 3.8)				
i) Min. distance from trackway center to ROW Limt 2250+2600+1500=6350				2250 - distance from centreline of trackway to centreline of track
Min. ROW:	6350x2=12700	**12,700**		2600 - distance from centreline trackway to outside top edge of 300 ballast curb
(All ductbanks located between tracks)				1500 - distance from outside top edge of ballast curb to LRT ROW Limit
ii) Preferred distance from trky centre to ROW limit 2250+2600+5000=9850				5000 - distance from outside top edge of ballast curb to LRT ROW Limit
Preferred ROW:	9850x2=19700		**19,700**	review 5000 - from Fig 3.8
(Locate Comm. ductbank on one side of Trkwy)				
1D - Basic Trackway with subdrains at Track Crossover				
i) With switch blowers on one side distance from trkwy centre to				2250 - distance from centreline of trackway to centreline of track
min. ROW limit is:	2250+1800+1200+300+1225+500=7275			1800 - distance from centreline of track to top outside edge of track ballast
Distance from track centre opposite switch blower to min. ROW limit: 2250+1800+1200+500=5750				1200 - distance from top edge of ballast to the outside edge of subdrain
Min. ROW:	7275+5750 = 13025	**13,025**		300-offset from subdrain to nearside edge of switch blower pad
				1225 - width of switch blower pad
ii) With sevice vehicle layby on switch blower side distance from track centre to				500 - minimum offset from outside edge of blower pad to LRT ROW Limit
min. ROW limit is:	2250+1800+1200+4000+500=9750			
Distance from track centre on opposite side of switch blower to ROW Limit:2250+1800+1200+500=5750				
Min.ROW:	9750+5750=15500	**15,500**		4000 - width of service vehicl layby measured from outside of subdrain
(Comm. Ductbank can be accommodated outside trackway on service veh.layby side)				
iii) Provide preferred 1000 offset from subdrain to ROW Limit for Configuration 1D ii) opposite side only				
Preferred ROW:	15500+500=16000		**16,000**	Add 500 offset to provide preferred offset of 1000 on side opposite service vehicle layby
1E - Trackway Configuration 1C (Basic Curbed) with *SUP on one side				
Min. dist. From Trkwy center to ROW limit on SUP side: 2250+2600+3050+3000+500=11400				2250 - distance from centreline of trackway to centreline of track
Distance from track centre on side opposite to SUP to ROW limit:2250+2300+650+500=5700				2600 - distance from centreline trackway to outside top edge of ballast curb
Min ROW:	11400+5700=17100	**17,100**		3050 -distance from outside edge of ballast curb to trackway edge of SUP
(Comm. ductbank can be located between ballast curb and SUP)				3000 - width of SUP
				650 - width of base of ballast curb
***Note:** "SUP" - Shared Use Path (Formely "MUT" - Multi-Use Trail)				500 - minimum offset from outside edge of SUP to LRT ROW Limit
Preferred ROW:	11400+2250+2300+650+500+1000 (500+500)=18100		**18,100**	1000-preferred offset from outside edge of SUP to LRT ROW Limit
1F - Type 3 Station with 9 m platform and Curbed Trackway (refer to Fig.3.23)				
Abs. min. distance from platform centre to ROW limit:4500+1405+2300+650+950+350=10155				4500 - platform width 9000 divided by 2
Abs. min ROW:	10155x2=20310	**20,310**		1405 - distance from platform edge to centreline of track
(Ductbanks routed under station platform, Cat masts on outside of ballast curb along length of platform)				2300 - distance from centreline trkwy to inside edge of ballast curb
				650-width of base of ballast curb
				950-diameter of catenary mast foundation
				350 - abs. min. offset from outside edge of cat. mast base to LRT ROW Limit
				2300 - distance from outside top edge of ballast curb to LRT ROW Limit
Preferred distance from platform center to ROW limit 4500+1405+2300+650+950+1000=10805				
Preferred ROW:	10805x2=21610		**21,610**	1000-preferred offset from outside edge of cat mast base to LRT ROW Limit
Longtitudnal dist. req'd to transition ROW to basic trackway width (50+100+20+50=220m)				50- transition distance from basic trackway to station and trackway width
				100- platform length 4 car trains
				20-additional platform length to accommodate one more car
1G - Trackway Configuration 1B (with subdrains) at Pocket Track				
Min. distance from trackway centerline to farside ROW limit 4500+1405+1800+1200+500=9405				4500 - platform width 9000 divided by 2
Min. distance to ROW limit on Serv. Veh lay side 4500=1405+1800+1200+4000+500=13405				1405 - distance from platform edge to centreline of track
Min. ROW:	9405+13405=22810	**22,810**		1800 - distance from centreline of track to top outside edge of track ballast
(Track centers based on station platform width of 9000)				1200 - distance from top edge of ballast to the outside edge of subdrain
(Switch blowers located between tracks. All ductbanks located in trackway)				4000 - width of service vehicl layby
				500 - minimum offset from outside edge subdrain/service vehicle layby to LRT ROW Limit
Preferred ROW:	22810+1000 (500+500)=23810		**23,810**	1000-preferred offset from outside edge of subdrain/service veh. Layby to LRT ROW Limit
2 -TRACKWAY BESIDE ARTERIAL/COLLECTOR RD		**Minimum ROW mm**	**Preferred ROW mm**	**Details of Dimensions**
Open Trackway with Ditches - Configuration generally not applicable in urban area				
2A - Basic Open Trackway with sudrains				
Min.distance from Trkwy center to farside ROW limit 2250+1800+1200+500=5750				2250 - distance from centreline of trackway to centreline of track
Min.distance from Trkwy center to BOC of road 2250+1800+1200+1000=6250				1800 - distance from centreline of track to top edge of track ballast
Min. ROW:	5750+6250=12000	**12,000**		1200 - distance from top edge of ballast to the outside edge of subdrain
(All ductbanks located between tracks)				500- min. off set from outside edge of subdrain to far side ROW limit
				1000 - distance from outside edge of subdrain to BOC (back of curb)
Preferred distance from Trkwy center to farside ROW limit 2250+1800+1200+1000=6250				
Preferred distance from Trkwy center to BOC of road 2250+1800+1200+4300=9550				4300-distance from outside edge of subdrain to BOC
Preferred ROW:	6250+9550=15800		**15,800**	1000-preferred offset from outside edge of subdrain to farside ROW limit
(Comm ductbank on road side of trackway between subdrain and BOC)				
2B - Basic Trackway with Subdrains at Track Crossover				
Min.dist. from Trkwy center to farside ROW limit 2250+1800+1200+500=5750				2250 - distance from centreline of trackway to centreline of track
Min.dist. from Trkwy center to BOC of road 2250+1800+1200+300+1225+500=7275				1800 - distance from centreline of track to top edge of track ballast
Min. ROW:	5750+7275=13025	**13,025**		1200 - distance from top edge of ballast to the outside edge of subdrain
(All ducbanks in trackway, service vehicles occupy curb lane)				300 - distance from outside edge of subdrain to edge of blower pad
				1225 - width of blower pad; 500-min.offset from outside edge of blower pad to BOC
Preferred distance from Trkwy center to farside ROW limit 2250+1800+1200+1000=6250				4000 - distance from track side of blower pad to edge of road travelled lane
Preferred distance from Trkwy center to BOC of road 2250+1800+1200+300+4000=9550				1000 - preferred offset from outside edge of subdrain to farside ROW limit
Preferred ROW:	6250+9550=15800		**15,800**	
(Provides exclusive service vehicle layby; comm ductbank between trkwy and road; switch blower pad				
in service vehicle layby)				

2 -TRACKWAY BESIDE ARTERIAL/COLLECTOR RD (cont'd)		Minimum ROW mm	Preferred ROW mm	Details of Dimensions
2C - Basic Curbed Trackway				
Min. distance from Trkwy center to farside ROW Limit: 2250+2300+650+500=5700				2250 - distance from Trkwy centre to centreline of track
Min. distance from track center to BOC: 2250+2300+300+1500=6350				2300 - distance from centreline of track to trackside top edge of ballast curb
Min ROW:	5700+6350 = 12050 (All ductbanks located between tracks)	**12,050**		650- width of base of ballast curb
				500- min offset from ballast curb base to farside ROW limit
Pref. dist. fr. Trkwy centre to farside ROW limit - provide 1000 offset from outside of ballast curb =6200				1500 - dist. from outside top edge of ballast curb to LRT ROW Limit (Fig.3.8)
Pref. dist. From Trkwy centre to BOC - 2250+2300+300+5000=9850				
Preferred ROW:	6200+9850=16050		**16,050**	1000-preferred offset from ballast curb base to farside ROW limit
(Comm ductbank located between roadside ballast curb and BOC)				5000- preferred distance from top of ballast curb to BOC (refer to Fig3.8)
2D - Basic Curbed Trackway at Track Crossover				
Min. distance from Trkwy center to farside ROW Limit: 2250+2300+650+500=5700				2250 - distance from centreline of trackway to centreline of track
Min.dist. from Trky center to BOC of road 2250+2300+300+1225+500=6575				2300-distance from centreline of track to track side of ballast curb
Min ROW:	5700+6575=12275	**12,275**		300-width of top of tapered ballast curb
(Comm Ductbank between road and tracks. All other ductbanks located between tracks)				650-width of base of tapered ballast curb
				500- min offset from base of ballast curb to farside ROW limit
Preferred dist. from Trkwy center to farside ROW limit 2250+2300+650+1000=6200				
Preferred dist. from Track Center to BOC of road 2250+2300+300+4000=8850				1225-width of blower pad
Preferred ROW:	6200+8850=15050		**15,050**	1000-preferred offset from base of ballast curb to farside ROW limit
(Provides exclusive service vehicle layby, comm ductbank between trackway and road				4000- distance from to edge of ballast curb to edge of road travelled lane (layby width)
and switch blower pad in service vehicle layby)				
2E - Basic Curbed Trackway with Noise Wall and MUT on one side				
(Based on Typical 114 Street North of 76 Ave.)				2250 - distance from centreline of trackway to centreline of track
Min. distance from Track center to farside ROW Limit:2250+2300+295+500+3000+500=8845				2300 - distance from centreline of track to trackside face of noise wall cap
Min. distance from track center to BOC:2250+7400=9650				295 - width of noise wall cap
Min ROW:	8845+9650=18495	**18,495**		500 - distance from MUT side face of noise wall cap to trackside edge of MUT
(Comm Ductbank between track and road. All other ductbanks located between tracks)				3000 - min. width of MUT
				500-min. offset from edge of MUT to ROW limit
				7400 - distance from road side track centreline to back of road curb (BOC)
Preferred ROW:	18495 - 500 +1000=18995		**18,995**	1000-preferred offset from MUT to ROW limit
2F - Type 3 Station with 9 m platform, Curbed Trkwy, Noise Wall and MUT on one side				
Min.dist. from track center to farside ROW limit: 4500+1405+2300+950+295+500+3000+500=13450				4500-platform width of 9000 divided by 2
Min./pref. dist. from track centre to BOC 4500+1405+7400=13305				1405-distance from platform edge to track centre
Min ROW:	13450+13305=26755	**26,755**		2300 - distance from centreline of track to trackside face of cat pole base
(Noise Wall and MUT on one side of station. All ductbanks routed under station platform)				7400 - distance from track centreline to back of road curb (BOC)
				950-width of cat pole base
				295- width of noise wall cap
				500 - distance from MUT side face of noise wall cap to trackside edge of MUT
				3000 - width of MUT
				500-min. offset from edge of MUT to ROW limit
Preferred ROW:	26755 - 500+1000 =27255		**27,255**	1000-preferred offset from MUT to ROW limit
Longtitudnal dist. req'd to transition ROW to basic trackway width (50+100+20+50=220m)				50- transition distance from basic trackway to station and trackway width
				100- platform length 4 car trains
				20-additional platform length to accommodate one more car
2G - Basic Curbed Trackway at Pocket Track				
Min.dist. from track center to farside ROW limit: 4500+1405+2300+650+500=9355				4500-platform width of 9000 divided by 2
Min/pref. dist. from track centre to BOC 4500+1405+7400=13305				1405-distance from platform edge to track centre
Min ROW:	9355+13305=22660	**22,660**		2300 - distance from centreline of track to trackside face of cat pole base
(All ductbanks and switch blowers located in trackway, distance to BOC adequate to accommodate				650-width of base of ballast curb
service vehicle layby)				500- min. offset from edge ballast curb to farside ROW limit
				7400 - distance from roadside track centreline to back of road curb (BOC)
				1000-preferred offset from edge of signal base to ROW limit
Preferred ROW:	9355 - 500+1000+13305=23160		**23,160**	
3 - TRACKWAY IN MEDIAN OF ARTERIAL ROAD		**Minimum ROW mm**	**Preferred ROW mm**	**Details of Dimensions**
All ductbanks located in median of roadway and between or alongside of tracks				
Min ROW - is distance between trackside of New Jersy Barriers (NBJ) on both sides of median.				
Median ROW widths may increase - dependent on pedestrian volumes at Ped X-ings				
3A(i) - Basic Curbed Trackway No left turns at intersections				
Refer to Configuration 1C for ROW width				
Min. LRT ROW:	12700	**12,700**		
3A(ii) - Curbed Trackway All ped crossings allowed (refer to Fig. 18.2)				
Distance from trackway centreline to farside edge of left turn bay: 7250+1460+3300=12010				7250-distance from center of trackway to back of NJB on left turn bay side
Distance from trackway centreline on opposite side to trackside edge of through lane:10550+1460=12015				1460-offset from back of NJB to left turn bay lane marking/trackside edge of through lane
Preferred LRT ROW:	12010+12015=24025		**24,025**	3300-width of left turn bay
				10555-distance from center of trackway to back of NJB on through lane side
3A(iii) - Curbed Trackway Ped crossings one side only allowed (refer to Fig. 18.3)				
Distance from trackway centreline to farside edge of left turn bay: 5850+1460+3300=10610				5850-distance from center of trackway to back of NJB on left turn bay side
Distance from trackway centreline on opposite side to trackside edge of through lane:10550+1460=12015				1460-offset from back of NJB to left turn bay lane marking/trackside edge of through lane
LRT ROW:	10610+12015=22625		**22,625**	3300-width of left turn bay
				10555-distance from center of trackway to back of NJB on through lane side
3A(iv) - Curbed Trackway No Ped crossings allowed (refer to Fig.18.4)				
Distance from trackway centreline to farside edge of left turn bay: 5850+1460+3300=10610				5850-distance from center of trackway to back of NJB on left turn bay side
Distance from trackway centreline on opposite side to trackside edge of through lane:9150+1460=10610				1460-offset from back of NJB to left turn bay lane marking/trackside edge of through lane
LRT ROW:	10610+10610=21220		**21,220**	3300-width of left turn bay
				9150-distance from center of trackway to back of NJB on through lane side
3B - LRT Station w/ 9m Platform Ped crossing one side only (refer to Fig.18.5)				
Distance from trackway centreline to farside edge of left turn bay:9500+1460+3300=14260				9500-distance from center of trackway to back of NJB on left turn bay side
Distance from trackway centreline on opposite side to trackside edge of through lane:14210+1460=15760				1460-offset from back of NJB to left turn bay lane marking/trackside edge of through lane
LRT ROW:	14260+15760=30020		**30,020**	3300-width of left turn bay
				14210 -distance from center of trackway to back of NJB on through lane side
3C - LRT Station w/ 9m Platform No Ped crossings (refer to Fig.18.6)				
Distance from trackway centreline to farside edge of left turn bay:9500+1460+3300=14260				9500-distance from center of trackway to back of NJB on left turn bay side
Distance from trackway centreline on opposite side to trackside edge of through lane:12810+1460=14270				1460-offset from back of NJB to left turn bay lane marking/trackside edge of through lane
LRT ROW:	14260+14270=28530		**28,530**	3300-width of left turn bay
				12810 -distance from center of trackway to back of NJB on through lane side
3D - Curbed Trackway at Pocket Track				
Dependent if Cross-section 3B or 3C above are implemented.			**TBD**	
4 - TRACKWAY BESIDE OPERATING RAILROAD				
Provide **6000 mm** distance between the centreline of the railroad track and the centre of the closests			**TBD**	
LRT track. Width of LRT ROW will be dependent on application of configurations previously described.				

LRT DESIGN GUIDELINES

Chapter 4

2017 EDITION – Revisions Tracking Form

Section	Reference	Revision General Description	Issue Date
All	Various	Various units have been changed to match ISO standards (e.g. kph or km/hr have been changed to km/h)	July 2017
4.1.4	2nd last bullet	Minor text change.	
4.2.3.2	(b), 1st paragr	Updated reference.	
4.2.3.5	Balanced Speed, 4th paragr	Minor text change.	

4.0 TRACK ALIGNMENT

		Page
4.0	**TRACK ALIGNMENT**	**1**
4.1	GENERAL	1
4.1.1	Introduction	1
4.1.2	Applicable Codes, Regulations, Standards and Practices	1
4.1.3	Design Basis	1
4.1.4	Optimization	1
4.1.5	Design Speed	2
4.1.6	Definitions and Nomenclatures	3
4.2	HORIZONTAL ALIGNMENT	6
4.2.1	General	6
4.2.2	Tangent Sections	8
4.2.3	Curved Lines	9
4.3	VERTICAL ALIGNMENT	14
4.3.1	General	14
4.3.2	Gradient	15
4.3.3	Vertical Curves (VC)	15
4.3.4	Vertical Tangents	16
4.3.5	Asymmetrical Vertical Curves	16
4.4	COMBINED HORIZONTAL AND VERTICAL CURVES	16
4.5	VERTICAL CURVE RESTRICTIONS	16
4.6	SUPPLEMENTARY REFERENCE INFORMATION (FOR INFORMATION ONLY)	17

List of Figures

Figure 4.1 - LRV Acceleration Data (Graph and Table)
Figure 4.2 - Summary of Horizontal Alignment Standards (Table)
Figure 4.3 - V_u Versus E_u for Given E_a and Curve Radius (Table)
Figure 4.4 - Superelevation Versus Radius and Unbalanced Speed (Table)
Figure 4.5 - LRV Articulating Joint Limits
Figure 4.6 - Summary of Vertical Alignment Standards (Table)

List of Diagrams

Diagram 1 - Horizontal Curve and Spiral Nomenclature
Diagram 2 - Sag Vertical Curve Nomenclature
Diagram 3 - Crest Vertical Curve Nomenclature
Diagram 4 - Superelevation Runoff for Transition Spiral
Diagram 5 - Superelevation Runoff for Compound Spiral

4.0 TRACK ALIGNMENT

4.1 GENERAL

4.1.1 Introduction

This chapter defines the general requirements for the geometric design of the track alignment for the Edmonton LRT System. The desired minimum and maximum criteria are based on industry practices and passenger comfort. The absolute minimum and maximum criteria are based on safety considerations and have potential impacts in terms of maintenance costs, noise, wheel and track life. Extensive use of absolute minimum and maximum design criteria can result in service problems and unacceptable maintenance costs.

The absolute minimum criteria herein are set as limits and must be met unless approval is otherwise obtained from the ETS. They are not intended to be used as the standard throughout the system.

Guidelines are presented for horizontal and vertical alignment, survey control and vehicle clearances. They have been derived through experience and accepted engineering practices to suit the requirements of the Edmonton LRT System.

4.1.2 Applicable Codes, Regulations, Standards and Practices

The following references have been used in developing these geometric design guidelines:

- American Railway Engineering and Maintenance Association “AREMA” (formally known as AREA) Practices
- Railroad Engineering (William W. Hay)
- Transit Cooperative Research Program (TCRP) Report 57, Track Design Handbook for Light Rail Transit - Transportation Research Board (TRB)
- LRT Signals System Engineering Standards Manual (Omnia Incorporated) – Referred to as Signals Engineering Standards Manual

4.1.3 Design Basis

The primary objective is to design a track alignment that is cost effective, ensures a high level of system performance and efficiency, and will carry LRT passengers safely and comfortably.

The design standards utilized must take into account the LRV, and overall operations and maintenance considerations.

Specifically, the factors that will influence the design of any alignment will include:

- Cost effectiveness which considers material cost based on physical lengths, maintenance cost, operating cost and right-of-way cost of each alignment alternative
- LRV performance characteristics
- LRV and Design Vehicle Characteristics (refer to Chapter 2, Vehicles and Chapter 3, Clearances and Right-of-Way)
- LRV and auxiliary equipment clearances
- Right-of-way restrictions including physical horizontal and vertical constraints
- Geometric design standards and practices
- Public and stakeholder input and concerns

4.1.4 Optimization

It is important that the during the preliminary design process, track alignment is optimized to provide an efficient operating system without compromising passenger safety and ride quality.

The fundamental objective of track geometric design is to identify the appropriate range of geometric parameters that satisfies the physical horizontal and vertical constraints within the given right-of-way. Track alignment design should not be carried out for any given segment of track without considering how the adjacent segments will be influenced. Often the design adjustments will have an impact on the operational characteristics, passenger comfort, construction cost and maintenance cost, etc. of the adjacent segments.

The overall objective of track alignment optimization is to:

- Ensure that the lateral acceleration experienced by the passenger is within acceptable limits (refer to Section 4.2.3.2).
- LRV will not experience negative unbalanced lateral acceleration through the identified range of operating speeds.

The general factors influencing the alignment design have been listed in the preceding section 4.1.3. In addition to those, the following factors should also be considered in carrying out track alignment design:

- Station spacing
- Stopping distance
- Speed Profiles for the track alignment
- Track superelevation requirements (the appropriate combination of actual and unbalanced superelevation) and LRV attainable speed
- Track separation and trackwork configuration

During the preliminary engineering design phase, the conceptual track alignment should be optimized in accordance with the following procedure:

- Mathematize alignments based on the Survey Control Network
- Analyze the horizontal and vertical alignment with respect to operation and system requirements
- Develop track charts showing horizontal curve information corresponding with the vertical alignment profiles
- Calculate the maximum allowable unbalanced speed in accordance with the curve radii
- Develop the comprehensive speed profile based on the track charts and vehicle performance. For Vehicle Acceleration data, refer to Figure 4.1. For Stopping Distance (Dynamic and Worst Case) data, refer to the Signals Engineering Standards Manual, Section 3.6.
- Optimize the attainable operating speeds to avoid abrupt changes in operating speeds between curves over short distances. Gradual changes in operating speeds are preferred. Track alignment should be optimized between stations to meet the overall system operation requirements and operating speeds. Maximum operating speed upon entering station is 40 km/h.
- Adjust actual track superelevation to the optimized operating speeds and to eliminate the possibility of a negative superelevation condition on the designed curves.

Note: Negative unbalanced lateral acceleration is undesirable, and results in excessive wheel and rail wear and reduction in passenger comfort.

4.1.5 Design Speed

4.1.5.1 Speed

Design speed is determined by geometry, station spacing, safety, and signal system constraints. All tracks should be designed for the maximum design speed dictated by the geometric and operational constraints of the section under consideration.

The maximum design speed for the LRV on mainline should not exceed 80 km/h.

The maximum design speed for the Work train on mainline should not exceed 40 km/h.

The maximum design speed on yard track should not exceed 15 km/h except for vehicle testing track where the maximum design speed will be dictated by geometric and safety constraints (refer to Chapter 5 Trackwork, Section 5.2.3.2).

Where the LRT line crosses a trolley bus line, the design speed may be restricted by the maximum allowable rate of change of height for the pantograph (refer to Chapter 6, Traction Power Section 6.5.3.8).

4.1.5.2 Acceleration/Deceleration

The time and distance required to bring the LRV to maximum operating speed following a stop or speed reduction, will directly affect the overall running time and system capacity. The time and distance required for the LRV to accelerate influence the determination of appropriate track superelevation and operating speed in maintaining system operational efficiency. The time and distance required for the LRV to decelerate are critical in order to maintain the safe stopping distance.

The selection of the combined actual and unbalanced superelevation for a given track alignment must take into consideration the attainable speed of the LRV based on the vehicle acceleration and deceleration characteristics (refer to Figure 4.1(i)).

4.1.6 Definitions and Nomenclatures

This section presents the industry accepted formulae and definitions, including related diagrams, to be used by the Consultant to calculate the horizontal and vertical alignment.

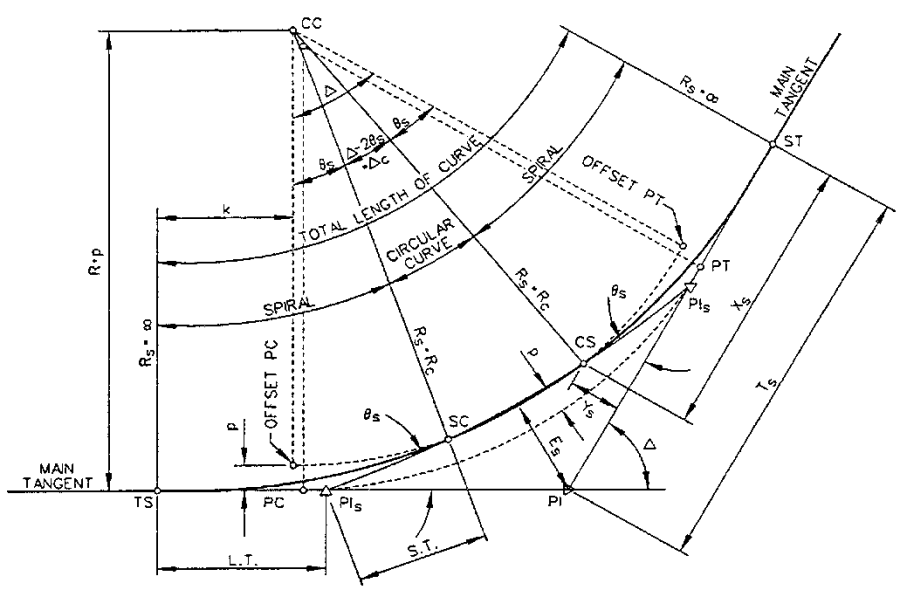

Diagram 1 – Horizontal Curve and Spiral Nomenclature

Notations:

CC = Centre of circular curve

CS = Point of change from circular curve to spiral

$_c$ = Degree of circular curve in arc definition

E_s = Total external distance of a spiralized Curve

k = Tangent distance from TS or ST to PC or PT of the shifted circular curve

L_C = Total length of circular curve in arc

L_s = Total length of spiral

L.T. = Long tangent of spiral

p = Offset from main tangent to PC or PT of the shifted circular curve

PC = Point of change from tangent to circular curve

PI = Point of intersection of main tangents

PI_s = Point of intersection of main tangent and tangent through SC or CS point

PT = Point of change from circular curve to tangent

R_c = Radius of circular curve

R_s = Instantaneous radius of spiral Curve

SC = Point of change from spiral to circular curve

ST = Point of change from spiral to tangent

S.T. = Short tangent of spiral

T_s = Total tangent distance from TS or ST to PI

TS = Point of change from tangent to spiral

X_s = Tangent distance from TS to SC or ST to CS

Y_s = Tangent offset at SC or CS

Δ = Total deflection angle of spirals and circular curve

Δ_c = Deflection angle of circular curve

θ_s = Deflection angle of spiral in radians

Circular Curve Formulas:

$$D_C = \frac{5729.578}{R}$$

$$T_S = (R + p) \times \tan\left(\frac{\Delta}{2}\right) + k$$

$$E_S = (R + p) \times \left[\frac{1}{\cos\left(\Delta/2\right)} - 1\right] + p$$

$$L_S = \frac{\Delta_C}{D_C} \times 100 = \left(\frac{\Delta - 2\theta_S}{D_C}\right) \times 100$$

Spiral Formulas:

$$X_S = L_S\left(1 - \frac{\theta_S^{\,2}}{10} + \frac{\theta_S^{\,4}}{216} - \frac{\theta_S^{\,6}}{9360} + \ldots\ldots\right)$$

$$Y_S = L_S\left(\frac{\theta_S}{3} - \frac{\theta_S^{\,3}}{42} + \frac{\theta_S^{\,5}}{1320} - \frac{\theta_S^{\,7}}{75600} \ldots\right)$$

$$k = L_S\left(\frac{1}{2} - \frac{\theta_S^{\,2}}{60} + \frac{\theta_S^{\,4}}{2160} - \frac{\theta_S^{\,6}}{131040} + \ldots\ldots\right)$$

$$p = L_S\left(\frac{\theta_S}{12} - \frac{\theta_S^{\,3}}{336} + \frac{\theta_S^{\,5}}{15840} - \ldots\ldots\ldots\right)$$

$$L_S = 2 \times R \times \theta_S \qquad \theta_S = \frac{1}{2} \times \left(\frac{L_S}{R}\right)$$

$$L.T. = X_S - \left(\frac{Y_S}{\tan\theta_S}\right) \qquad S.T. = \left(\frac{Y_S}{\sin\theta_S}\right)$$

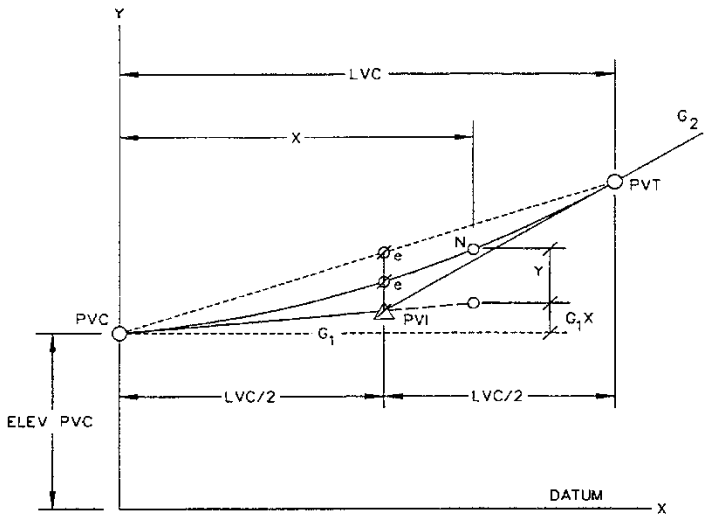

Diagram 2 – Sag Vertical Curve Nomenclature

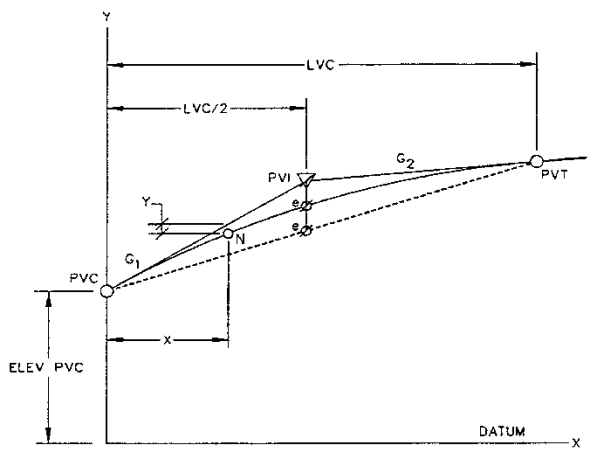

Diagram 3 – Crest Vertical Curve Nomenclature

Notations:

A = Algebraic difference in grades

e = External distance from curve to PVI

G_1 = Incoming vertical grade in percentage

G_2 = Outgoing vertical grade in percentage

LVC = Length of vertical curve

K = Rate of change in grade

PVC = Beginning of vertical curve

PVI = Point of vertical intersection

PVT = End of vertical curve

X = Horizontal distance from PVC

Y = Vertical distance from PVC

N = Point along the vertical curve

Parabolic Vertical Curve Formulas:

$$A = (G_2 - G_1)$$

$$e = \frac{(G_2 - G_1)}{800} \times LVC = \frac{A}{800} \times LVC$$

$$K = \frac{LVC}{A}$$

$$LVC = A \times K$$

4.2 HORIZONTAL ALIGNMENT

4.2.1 General

Mainline horizontal track alignment consists of tangents, circular curves and spiral transition curves. Circular curves can be further classified as simple, compound or reverse curves and are described in the following sections.

In general, wherever possible, it is considered good practice to introduce spiral transition curves to ease the wheels in and out of the circular curve portion of the alignment. This design approach should also apply to large circular curves on mainline not requiring superelevation.

In the yard or non-revenue tracks where operating speed is low, transition spiral curves are generally not required.

Superelevation should be introduced on curves to counteract the centrifugal forces and to maximize the design operating speed set within the vehicle and design limitations, still maintaining a safe comfortable ride for passenger.

4.2.1.1 Survey Control Network

The track alignment is used as the reference line (by all other consultants) by which the design of all other major system components are carried out. The linear nature of track alignment components and stringent trackwork construction tolerances warrant a need to maintain the geometric integrity of the existing system and planned extensions. Prior to the commencement of preliminary design work, a Survey Control Network must be established by a certified Alberta Land Surveyor to ensure all system components are tied together properly.

The horizontal alignment must be mathematized in accordance with the established Survey Control Network.

4.2.1.2 Control Criteria

The horizontal control for all alignments must be based on the Alberta Survey Control grid, which uses a sea level datum and a 3° Mercator Projection. All intersections and curve data points are to be coordinated to this grid. Dimensions and chainages shown on the drawings must be correct at existing ground level (top of rail). Distances obtained by inversing coordinates must be corrected by a factor to yield the correct dimensions at existing ground level datum. This correction factor has two components. One component corrects for the difference in elevation between sea level and ground level and is essentially constant throughout the Edmonton area. The second component corrects for the effects of the earth's curvatures and varies as the distance from the reference meridian on which the 3° Mercator Projection is based. This second component varies significantly over the Edmonton area. The Consultant must ensure that correct combined factor for converting the grid coordinates to ground coordinates or vice versa is used on each portion of the alignment under consideration.

It is the responsibility of the track alignment consultant to verify the record drawings of the existing system components and to ensure they are tied to the Survey Control Network established for the portion of alignment under consideration.

Note: The Project Manager for the South LRT Extension Project prepared a Reference Document titled Survey Control Network, July 2004. It describes in detail the survey control network for Sections 1A and 1B. It is available upon request from the ETS.

4.2.1.3 Reference Lines

The reference line for the alignment design will be the track centreline. A separate chainage will be run along the centreline of each track. All dimensions, clearances, etc., pertaining to the track must be referred to the centreline. The reference track centreline must be tied to the established Survey Control Network.

4.2.1.4 Track Centres

The minimum track separation on tangent is 4.5 m at track centres. Track separation less than 4.5 m may cause the vehicle dynamic clearance envelope to encroach on wayside equipment such as catenary and signal support masts located between the tracks.

The minimum track separation is dependent on the physical dimensions and truck configuration of LRV and on-track auxiliary maintenance equipment used in the system. For tracks located on curves, it is the responsibility of the track alignment consultant to verify and ensure there is no encroachment to the minimum vehicle running clearance envelop by any of the trackway and structural elements. As such, this will entail a dynamic vehicle clearance analysis on the basis of bi-directional train movement.

Refer to Chapter 3, Clearance and Right-of-Way, Section 3.3.3, Minimum Vehicle Running Clearance Envelope.

Refer to Chapter 5, Trackwork, Section 5.2.3.3 Minimum Track Separation and Fouling Point.

4.2.1.5 Field Checks

Field checks should be incorporated as part of the Testing and Commissioning Program.

Field checks may be necessary to verify that wayside equipment installed on tunnel walls and within curved sections of the alignment does not intrude into the vehicle dynamic clearance envelope.

If required, distances, clearances, and intersection points of crucial importance should be field checked, prior to constructing the track, by laying out the relevant portion of the alignment on site or by using a mock-up dynamic vehicle template mounted on the testing vehicle.

4.2.2 Tangent Sections

4.2.2.1 Tangent Length Between Reverse Curves

Mainline absolute minimum tangent length between reverse curves depends on the vehicle and effect on passenger ride quality. The criterion for the Edmonton LRT System is based on the truck configuration. It ensures that the front axle on the leading truck does not enter a curve of one direction while the rear axle of the trailing truck is within a curve in the reverse direction. The absolute minimum tangent length between reverse curves on mainline is 10 m (refer to Chapter 2, Vehicles; Figure 2.1).

The absolute minimum tangent length between reverse curves will only be considered:

- At special trackwork installations
- Areas where speed reductions are placed
- In spiral transition curves provided that for at least one of the spirals, the spiral offset distance from tangent for the first 1/3 of spiral transition is less than 5 mm.

The desired minimum tangent length between reverse curves should be the length of the LRV (25 m) or a travel distance over 2 seconds, whichever is greater.

4.2.2.2 Tangent Length between Curves in the same Direction

For curves orientated in the same direction, it is preferable to incorporate a compound curve or compound spiral rather than to have a short tangent between curves. If a tangent is required, the minimum tangent length requirement for the reverse curves will apply.

4.2.2.3 Tangent at Stations

Horizontal alignment should be tangent through the entire length of station platform and extending a minimum of 15 m beyond each end of the platform (refer to Chapter 3, Clearances and Right-of-Way, Section 3.3.3.1).

As a general guideline, the absolute minimum un-superelevated tangent length beyond each end of station platform is usually based on the greater of:

- The longest maintenance vehicle with rigid body frame – one-car length. This is currently the VMB (13.0 m).
- The Edmonton LRV – front end of the SD160 LRV to the centre of the rear axle of the truck at the articulating joint (12.7 m).

The absolute minimum horizontal tangent length beyond the station platform will not be relaxed unless the end of the platform is tapered to meet vehicle dynamic clearance requirements. If a design variance is proposed, the track alignment consultant must provide a vehicle dynamic clearance analyses to substantiate the variance request for review by ETS.

4.2.2.4 Tangent at Special Trackwork

All special trackwork should be located on tangent track. The absolute minimum tangent length ahead the point of switch and beyond the last long ties, should be 5 m. This is to ensure the truck is straightened out to minimize the angle of attack by wheel flange prior to entering the special trackwork area. If vehicle movement would entail a reverse curve movement the criterion for tangent length between reverse curves will apply.

In direct fixation track structure where there is good control of track installation tolerances and minimal differential movement between track components, the absolute minimum tangent ahead the point of switch and beyond the heel joint of the frog, may be reduced to 3 m, except where vehicle movement would entail a reverse curve movement.

4.2.3 Curved Lines

4.2.3.1 Circular Curve

All curves are to be defined by arc definition and specified by radius in metres. Larger radii are to be used whenever possible to improve ride comfort qualities. The circular curve design criteria for the Edmonton LRT System are as follows:

Mainline Track

The desirable minimum circular curve radius is 180 m. Circular curve with radius less than the desirable minimum will result in higher maintenance costs, reduced rail life and increased the probability of rail squeal.

The following must be analyzed when any deviation from this standard is being considered:

- The impact on operating speed, safety and maintenance
- Mitigation of noise and vibration
- Influence on vehicle dynamic clearances to trackway elements

Yard Track

The absolute minimum circular curve radius is 35 m.

4.2.3.2 Spiral Transition Curves

Spiral transition curves should be used on all mainline track curves with a radius less than 1500 m. The minimum length of spiral curve to be provided should be the greatest of the computed value from equations (1), (2) and (3) as follows:

a. Based on the criterion for the rate of change in superelevation of 30 mm/s (refer to 4.2.3.5):

$$E_a = \text{Rate} \times t, \text{ and } t = \frac{L_s}{v}$$

Where v is velocity in m/s

Therefore $$E_a = \frac{\text{Rate} \times L_s}{v} = \frac{30}{0.278} \times \frac{L_s}{v}$$

$$E_a = 108 \times \frac{L_s}{V}$$

$$L_s = \frac{E_a \times V}{108} \qquad (1)$$

Where, L_s = Length of spiral curve in m

E_a = superelevation in mm

V = maximum speed in km/h

b. Based on the maximum acceptable lateral acceleration for unbalanced superelevation E_u on a circular curve of 0.067 g and a comfortable rate of change of lateral acceleration of

0.03 g/s (refer to 4.2.3.5), the minimum time period to attain the full acceleration of 0.067 g will be 0.067/0.03 or approximately 2 seconds.

Therefore, $L_S = V \times \frac{1000}{3600} \times 2 = 0.556V$

If operating with an unbalanced superelevation less than the maximum unbalanced superelevation permitted, then length of spiral necessary to ensure passenger comfort can be reduced proportionally as follows:

$$L_S = 0.556V \times \frac{E_u}{E_{u\,max}}$$

Where, $E_{u\,max}$ = 100 mm

Therefore, $L_S = 0.556V \times \frac{E_u}{100} = \frac{E_u \times V}{180}$ (2)

Where, L_s = Length of spiral curve in m
E_u = unbalanced superelevation in mm
V = maximum speed in km/h

Based on the truck spacing

$$L_S = 15\,m \quad (3)$$

Note: The minimum spiral length is equal to the LRV truck spacing (7.7 m). The desirable minimum spiral is twice the LRV truck spacing. This is consistent with the general industry practice.

4.2.3.3 Compound Circular Curves

The criterion for compound circular curves is similar to that for tangent-to-curve transition (refer to Section 4.2.3.2). Although less severe, they must still address passenger comfort and vehicle design in torsion. Where circumstances dictate the use of compound curves, the circular curves must be linked by spiral curves conforming to Section 4.2.3.2 provided the compounding ratio between the large radius and smaller radius does not exceed 1.15. Where compounding ratio is greater than 1.15, a compound spiral should be used.

The compound spiral should be used to connect the two circular curves to avoid abrupt change in curvature, wherever possible.

4.2.3.4 Compound Spiral

The minimum compound spiral inserted between a pair of superelevated circular curves should be the greater of the following:

$$L_S = \frac{(E_1 - E_2) \times V}{108} \quad (4)$$

$$L_S = \frac{(E_{u1} - E_{u2}) \times V}{108} \quad (5)$$

$$L_S = 15\,m$$

Where, L_s = spiral length in m
V = speed in km/h

E_1 = the larger actual superelevation in the two curves in mm
E_2 = the smaller actual superelevation in the two curves in mm
E_{u1} = the larger unbalanced superelevation in the two curves in mm
E_{u2} = the smaller unbalanced superelevation in the two curves in mm

The desirable compound spiral length is twice as long as the calculated minimum spiral length. This is consistent with the general industry practice. The compound spiral length should be reduced from the desirable length only in a difficult design condition dictated by alignment geometry or clearance requirement, and then, only by the smallest amount necessary.

Figure 4.2 provides a summary of the horizontal alignment standards.

4.2.3.5 Superelevation

General

Superelevation will be attained linearly throughout the full length of the spiral transition curve or throughout the full length of the runoff for circular curves, by raising the rail farthest from the curve centre, while maintaining the top of the inside rail at the profile grade.

Note: Applying the superelevation as noted implies appropriate measures will be taken in tunnel sections with superelevated curves as the centreline of the tunnel will not coincide with the centreline of the track. The centreline of the tunnel must be displaced towards the centre of curvature (refer to Chapter 3, Clearances and Right-of-Way; Figure 3.5) to accommodate vehicle clearances.

Superelevation Runoffs

The superelevation runoff for spirals will be accomplished within the length of spiral plus a distance of T_v beyond each end of the spiral transition points (i.e. TS and SC or CS and ST), as shown in Diagrams 4 and 5.

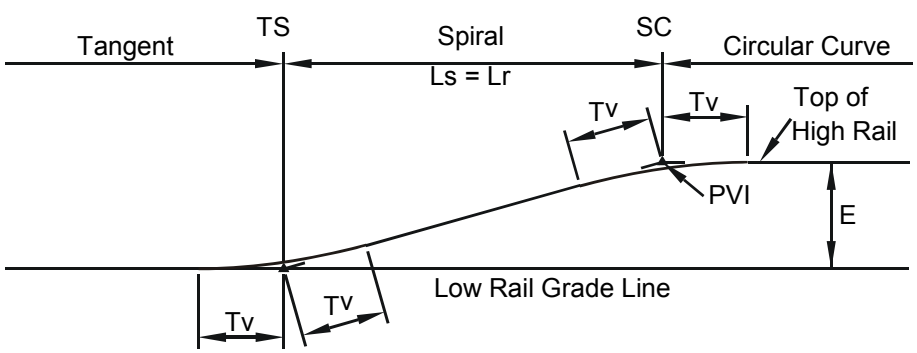

Diagram 4 – Superelevation Runoff for Transition Spiral

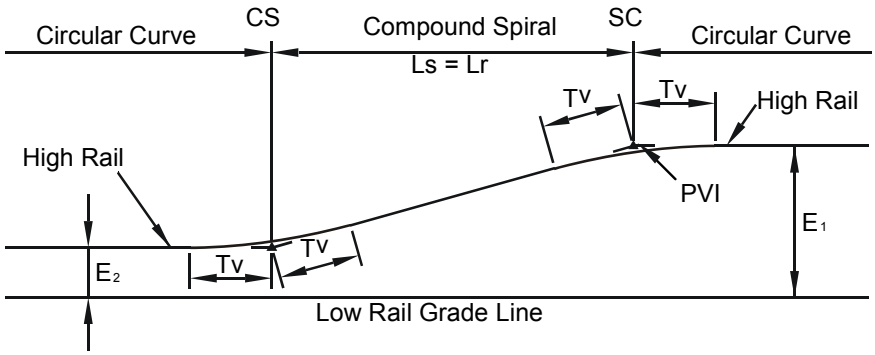

Diagram 5 – Superelevation Runoff for Compound Spiral

Rail is too stiff to conform to a sudden transition in the rate of change of elevation at the spiral transition points. To avoid creating a kink and inducing stresses in the running rail, a parabolic vertical curve should be used to adjust the runoff elevation at the spiral transition points.

Depending on the length of spiral and the actual superelevation, the required tangent length (T_v) of the parabolic vertical curve should be between 2 m and 4 m.

Superelevation runoffs for circular curves can be used instead of spiral transition curves in the following exceptional instances:

- The intersection angle is too small to necessitate a spiral
- In special areas where conditions limit the length of spiral

In the above instances, the runoff length should be the same length as the spiral. The spiral length is determined by satisfying the requirements of Section 4.2.3.2 and substituting the runoff length for the length of spiral. The runoff is to be located equally on either side of the curve or preferably within the tangent.

<u>Rate of Change in Superelevation</u>

The maximum rate of change of elevation is 30 mm per second for the maximum speed of train operation on the curve.

<u>Actual Superelevation E_a</u>

The maximum actual superelevation (E_a) permitted is 100 mm.

<u>Equilibrium Superelevation E_e</u>

When the operating speed is calculated based on an equilibrium condition, the wheels are bearing equally on the rail with no lateral thrust. The equilibrium superelevation (E_e) creates a resultant force F_r, at right angle to the plane of top of rail, counteracting the centrifugal force F_c. The equilibrium condition can be determined in the following equations:

Centrifugal Force F_c acting radially outward:

$$F_C = \frac{w \times V^2}{g \times R}$$

Where,
- w = Weight of vehicle
- V = Speed of vehicle in km/h
- R = Radius of curve in m
- g = Acceleration due to gravity, 9.81 m / s²

In an equilibrium condition:

$$\frac{F_c}{E_e} = \frac{w}{B}$$

Where, B = 1505 mm, centre of rail head to rail head support

$$E_e = \frac{F_c \times B}{w} = \frac{w \times V_b^{\ 2} \times B}{g \times R \times w}$$

$$E_e = \frac{BV_b^{\ 2}}{gR}$$

By converting speed from km/h to m/s

$$E_e = \frac{1505 \times V_b^{\ 2}}{9.81 \times 12.96 \times R}$$

$$E_e = 11.83 \times \frac{V_b^{\ 2}}{R} \qquad (6)$$

Where, E_e = Equilibrium superelevation (i.e. actual superelevation of outer rail in a balanced condition in mm)
V_b = speed for balanced superelevation in km/h
R = radius of the circular curve in m

Balanced Speed V_b

The balanced speed is determined by substituting E_a equal to 100 mm as follows:

$$V_b = \left(\frac{E_a \times R}{11.83}\right)^{1/2} \qquad (7)$$

However, trains are likely to run at different speeds on the same track, a certain amount of flexibility is allowed to obtain a range of optimal operating speed.

The maximum acceptable lateral acceleration for unbalanced superelevation on a circular curve is 0.067 g (based on maximum allowable unbalanced of 100 mm).

The desirable range of rate of change of lateral acceleration of 0.03 g/s or less is considered acceptable to provide a comfortable ride (refer to TCRP Report 57, Track Design Handbook).

As a design guideline, an unbalanced superelevation E_u of up to 100 mm is permitted in determining an optimal range of safe operating speed for the alignment under consideration.

Unbalanced Speed V_u

The maximum allowable unbalanced speed shall be determined by substituting E_u equal to 100 mm in the following equation:

$$V_u = \left\{\frac{(E_a + E_u) \times R}{11.83}\right\}^{1/2} \qquad (8)$$

Where, E_a = Actual superelevation of outer rail in mm
E_u = Unbalanced superelevation in mm
V_u = Unbalanced speed in km/h

R = radius of the circular curve in m.

The optimal range of unbalanced operating speed is determined by the combined superelevation (i.e. actual superelevation, E_a plus unbalanced superelevation, E_u). The combined superelevation for a given unbalanced operating speed, V_u can be optimized by going through the calculation iterations as shown Figure 4.3. The adjusted actual superelevation, E_a should be in increments of 5 mm.

Alternatively, the optimal range of actual superelevation that satisfies the lateral acceleration criteria can be checked and determined by the following equation:

$$E_a = 11.83 \times \frac{V_u^2}{R} - (Z \times 1505) \qquad (9)$$

$$Z = 11.83 \times \frac{Vu^2}{R} - E_a$$

Where,
E_a = Actual superelevation of outer rail in mm
V_u = Unbalanced Operating speed in km/h
R = Radius of the circular curve in m
Z = Allowable lateral acceleration in term of g (from 0 to 0.067 for ETS)

The minimum actual superelevation (E_a) required for a given curve radius and speed can be determined using Figure 4.4.

4.2.3.6 Superelevation Constraints in Turnouts

In tie and ballast structure, superelevation should not be introduced at a distance closer than 3 m ahead of the switch point or before the last long tie.

In direct fixation track structure, superelevation should not be introduced at a distance closer than 3 m ahead of the switchpoint or 3 m beyond the heel joint of the frog.

4.3 VERTICAL ALIGNMENT

4.3.1 General

Vertical track alignment is comprised of tangential gradients joined together by parabolic vertical curves.

For mainline track next to parallel major roadways the gradient will be dependent on the roadway profile in order to minimize the elevation differential between the road and the track.

Intersections of the vertical alignment of track and the road should be designed to match as closely as possible to provide for the smooth crossing of LRV's and vehicular traffic for safety and comfort.

In yard and non-revenue tracks where operating speed is low, desirable gradients will be at or near 0%.

4.3.1.1 Control

The vertical control for all track structures and related components are based on bench marks established by the Government of Canada or the Province of Alberta. All elevations are to be referenced to Geodetic Datum and indicated in meters to three decimal places.

4.3.1.2 Reference Lines

Gradients are to be referred to the horizontal track centreline and to the top of the low rail for all elevation controls.

4.3.2 Gradient

4.3.2.1 Mainline Track

The desirable maximum grade on mainline is 4.5%.

The absolute maximum grade on mainline is 6.0%. This is dictated by the LRV's braking capacity.

Grades in excess of 6.0% but not exceeding 6.7% may be permitted over short distances at the discretion of the ETS by taking into account the operating characteristics of LRV.

4.3.2.2 Stations

The maximum allowable grade through stations is 1.0%.

The minimum grade through stations is 0.3%.

A change in grade within the station area including 15 m beyond each end of the platform is not permitted. A change in grade within these defined limits will impact on the design and the construction of the station platform, and may create operational problems for the LRV in terms of opening of doors under crush load conditions.

4.3.2.3 Storage track and Yard track

The desirable grade for storage track and yard track is 0.0%.

The maximum grade for storage track and yard track should not be more than 0.5%.

4.3.2.4 Shop track

The grade for shop track must be 0.0%.

4.3.3 Vertical Curves (VC)

All changes in grade must be connected with parabolic curves. The minimum length of curve should be the greater of the computed value from equation (10), (11), (12) and (13) as follows:

a. Based on the minimum length permitted:

$$LVC = 60 \text{ m} \qquad (10)$$

Note: A minimum LVC of 60 m limits centripetal acceleration to less than 0.3 m/s2. This is accepted industry standard based on passenger comfort.

b. Based on the rate of change in grade:

$$LVC = A \times K \qquad (11)$$

Where, A = Algebraic difference in grades in percent

Note: Due to the restriction in the articulating joint of the LRV, the maximum "A" value should not be greater than 7% (refer to Figure 4.5).

K = Rate of change in grade as follows:

(i) on horizontal tangents or curves with balanced superelevation

$K = 25$

(ii) on curves with unbalanced superelevation

$K = 50$

(iii) Where speed is restricted to less than 50 km/h

$K = 15$

c. Based on the vertical acceleration (refer to TCRP Report 57, Track Design Handbook)

For crest curves:

$$LVC = 0.0047AV^2 \quad (12)$$

For sag curves:

$$LVC = 0.0025AV^2 \quad (13)$$

Where, A = Algebraic difference in grades in percent
V = speed in km/h

4.3.4 Vertical Tangents

Based on car length the minimum length of tangent grade between vertical curves should be 25 m.

4.3.5 Asymmetrical Vertical Curves

An asymmetrical vertical curve is a compound vertical curve with no intervening tangent length between the two vertical curves.

In areas where there are existing vertical or geometric constraints, asymmetrical vertical curve may be permitted. Asymmetrical vertical curves should not be used in areas where the vertical curve overlaps with tight horizontal curve, unless the rate of change in vertical curve K is greater than 50. Where speed is restricted to less than 50 km/h, the rate of change in vertical curve K may be reduced to 15.

4.4 COMBINED HORIZONTAL AND VERTICAL CURVES

Vertical alignment is dependent on the horizontal alignment. In laying out the vertical alignment, it is considered good practice to avoid overlapping a vertical curve with a horizontal curve. This condition will produce a twisting (roller coaster) effect. If the overlapping condition cannot be avoided, the rate of change in vertical curve should be made as generous as possible. As a minimum, the rate of change in vertical curve, K under the overlapping condition should not be less than 50. However, where speed is restricted to less than 50 km/h, the rate of change in vertical curve may be reduced to 25.

4.5 VERTICAL CURVE RESTRICTIONS

Vertical curves are not permitted within the limits of special trackwork.

A vertical curve should not be introduced at a distance closer than 3 m ahead of the switch point or before the last long tie.

In direct fixation track structure, a vertical curve should not be introduced at a distance closer than 3 m ahead of the switch point or 3 m before the heel joint of the frog.

Figure 4.6 provides a summary of the vertical alignment standards.

4.6 SUPPLEMENTARY REFERENCE INFORMATION (FOR INFORMATION ONLY)

The Duewag U2 vehicle acceleration data contained in Figure 4.1 (ii) was provided by Siemens. No indication was given whether the data was generated based on AW0 load (empty), AW1 load (63 seated passengers), AW2 load (design load with 160 passengers) or AW4 load (crush load with 258 passengers).

The following information was contained in the LRT Design Guidelines (1983/04/05 draft edition) Chapter 4, Clause 4.3, Performance Characteristics:

> "Acceleration rates shall be based on actual car weight (*31600 kg) plus a passenger load of *10650 kg" (i.e. equivalent to AW2 load of *42250 kg).
>
> The acceleration and deceleration rate of 1.34 m/s² (AW0 to AW2) and 1.16 m/s² respectively with full acceleration rate to maintained from 0 to 40 km/h before going on motor curve shall be provided with the vehicle."

***Note:** These weights are at variance with the most recent measured weight data as presented in Chapter 2 Vehicles, Section 2.3.2.3.

The data provided by Siemens is primarily based on the AW2 design load. ETS should be consulted if further clarification on the forgoing is required.

For deceleration data, the Consultant must refer to the Signals Engineering Standards Manual, Section 3.6.

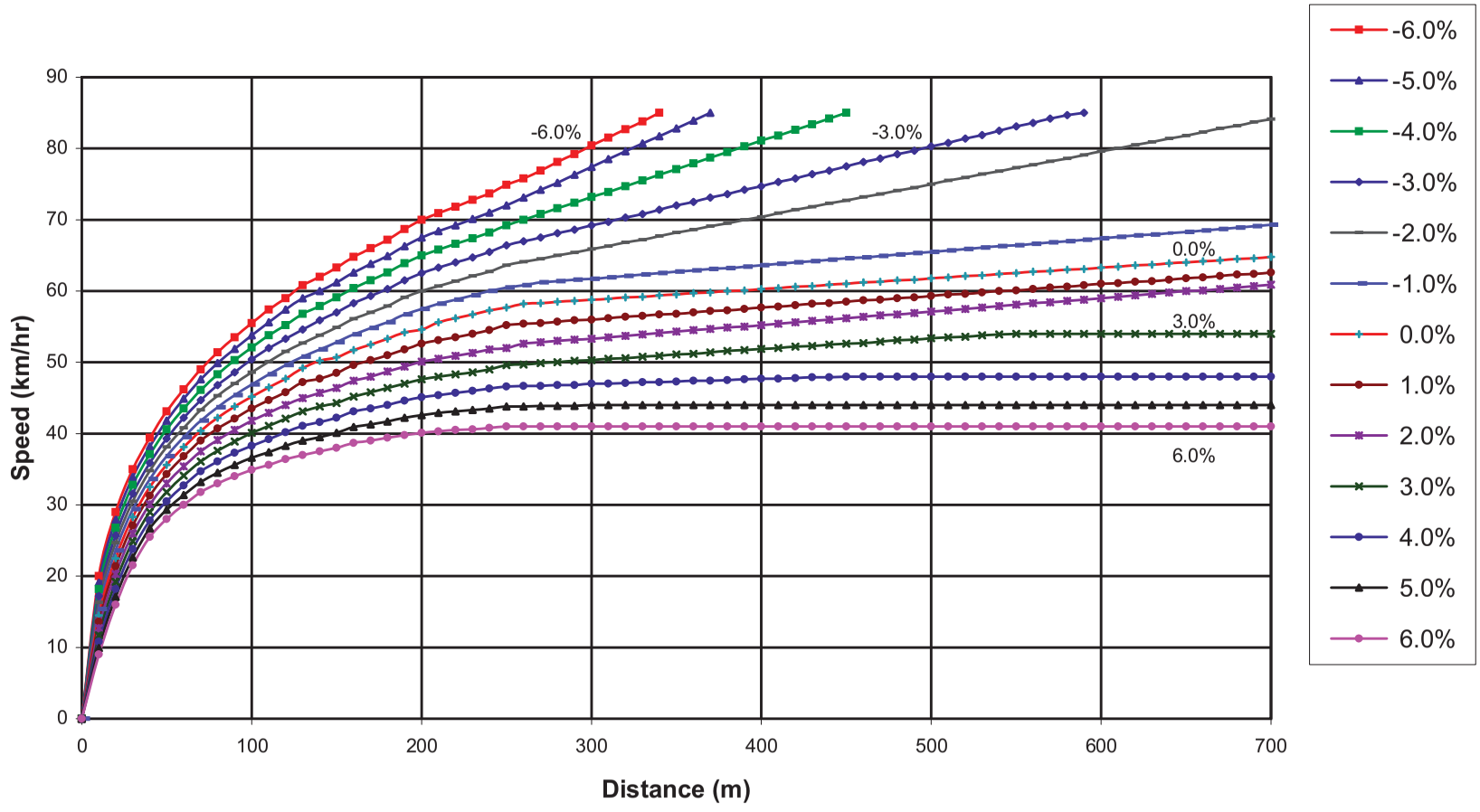

Figure 4.1 (i) - U2 Acceleration Curve

GRADE	ACCEL TO MOTOR CURVE	0-25 kph		0-35 kph		0-45 kph		0-55 kph		0-65 kph		0-75 kph		0-80 kph		0-85 kph		SETTLED SPEED		
	(m/sec 2)	TIME (sec)	DIST. (m)	TIME (sec)	DIST. (m)	TIME (sec)	DIST. (m)	TIME (sec)	DIST. (m)	TIME (sec)	DIST. (m)	TIME (sec)	DIST. (m)	TIME (sec)	DIST. (m)	TIME (sec)	DIST. (m)	(kph)	TIME (sec)	DIST. (m)
6.0%	**0.55**	12.6	44	19.5	103													41	33.0	250
5.0%	**0.65**	10.7	37	16.5	85													44	35.0	305
4.0%	**0.74**	9.4	33	15.0	80	30.0	250											48	45.0	450
3.0%	**0.83**	8.4	29	12.5	65	21.0	155											54	50.0	550
2.0%	**0.92**	7.5	26	11.0	60	17.5	135	29.0	300									63	68.0	960
1.0%	**1.00**	7.0	24	10.5	50	15.5	115	27.0	270	60.5	820							74	90.0	1400
0.0%	**1.10**	6.5	22	9.5	45	13.5	98	22.0	213	35.0	430	52.0	750	73.0	1220	110.0	2070	85	110.0	2070
-1.0%	**1.19**	5.8	20	8.5	43**	12.5	85	18.5	185**	27.5	305	40.0	550	47.0	700	83.0	1530	> 85		
-2.0%	**1.28**	5.4	19	7.5	40	11.0	75	17.5	170	24.5	290	33.0	470	39.0	580	45.0	720	*		
-3.0%	**1.37**	5.1	18	7.0	35	10.5	75	15.0	140	20.5	230	27.5	375	32.0	470	37.0	585	*		
-4.0%	**1.46**	4.7	17	6.5	33	9.5	67	13.0	115	18.0	200	23.5	305	27.0	380	30.0	450	*		
-5.0%	**1.55**	4.5	16	6.2	30	9.0	60	12.0	100	16.0	170	21.0	255	23.5	310	26.0	370	*		
-6.0%	**1.65**	4.2	15	6.0	29	8.5	57	11.5	97	15.0	165	19.0	245	21.0	280	23.0	340	*		

* AT SPEED > 85 kph OVERSPEED PROTECTION RESPONDS

** THE DATA PROVIDED APPEAR INCORRECT AND IS ADJUSTED BY THEORETICAL CALCULATION

Figure 4.1 (ii) - U2 Vehicle Acceleration Data

Track Zone	Criteria	Circular Curve (m)	Spiral Length (m)	Tangent Length (m)	Superelevation		
					E_a (mm)	E_u (mm)	Runoff (mm/sec)
Mainline	Maximum				100	100	30
	Desirable Minimum	180	2 x Minimum				
	Minimum		The greatest of: $L_s = (E_a \times V) / 108$ or $L_s = (E_u \times V) / 180$ or $L_s = 15$	The greater of: 25 or Travel distance over 2 seconds			
	Absolute Minimum			10			
Yard Track	Absolute Minimum	35					
Station Track	Minimum			Platform Length +30 (15 m each end)			
Special Trackwork	Minimum			Turnout Limits +10 (5 m each end)			

Figure 4.2

Summary of Horizontal Alignment Standards

R (m) E_a (mm)	35 0	35 5	35 10	35 15	35 20	35 25	35 30	35 35	35 40	35 45	35 50	35 55	35 60	35 65	35 70	35 75	35 80	35 85	35 90	35 95	35 100
E_u (mm)	V_u (Unbalanced Speed) in Km/hour; $V_u = V_b$ (Balanced Speed) when $E_u = 0$ (kph)																				
0	0	4	6	7	8	9	10	10	11	12	12	13	13	14	14	15	15	16	16	17	17
5	4	6	7	8	9	10	10	11	12	12	13	13	14	14	15	15	16	16	17	17	18
10	6	7	8	9	10	10	11	12	12	13	13	14	14	15	15	16	16	17	17	18	18
15	7	8	9	10	10	11	12	12	13	13	14	14	15	15	16	16	17	17	18	18	19
20	8	9	10	10	11	12	12	13	13	14	14	15	15	16	16	17	17	18	18	19	19
25	9	10	10	11	12	12	13	13	14	14	15	15	16	16	17	17	18	18	19	19	19
30	10	10	11	12	12	13	13	14	14	15	15	16	16	17	17	18	18	19	19	19	20
35	10	11	12	12	13	13	14	14	15	15	16	16	17	17	18	18	19	19	19	20	20
40	11	12	12	13	13	14	14	15	15	16	16	17	17	18	18	19	19	19	20	20	20
45	12	12	13	13	14	14	15	15	16	16	17	17	18	18	19	19	19	20	20	20	21
50	12	13	13	14	14	15	15	16	16	17	17	18	18	19	19	19	20	20	20	21	21
55	13	13	14	14	15	15	16	16	17	17	18	18	19	19	19	20	20	20	21	21	22
60	13	14	14	15	15	16	16	17	17	18	18	19	19	19	20	20	20	21	21	22	22
65	14	14	15	15	16	16	17	17	18	18	19	19	19	20	20	20	21	21	22	22	22
70	14	15	15	16	16	17	17	18	18	19	19	19	20	20	20	21	21	22	22	22	23
75	15	15	16	16	17	17	18	18	19	19	19	20	20	20	21	21	22	22	22	23	23
80	15	16	16	17	17	18	18	19	19	19	20	20	20	21	21	22	22	22	23	23	23
85	16	16	17	17	18	18	19	19	19	20	20	20	21	21	22	22	22	23	23	23	24
90	16	17	17	18	18	19	19	19	20	20	20	21	21	22	22	22	23	23	23	24	24
95	17	17	18	18	19	19	19	20	20	20	21	21	22	22	22	23	23	23	24	24	24
100	17	18	18	19	19	19	20	20	20	21	21	22	22	22	23	23	23	24	24	24	24

Figure 4.3 (1 of 27)

Vu Versus Eu plus Ea for R35

R (m) E_a (mm)	50 0	50 5	50 10	50 15	50 20	50 25	50 30	50 35	50 40	50 45	50 50	50 55	50 60	50 65	50 70	50 75	50 80	50 85	50 90	50 95	50 100
E_u (mm)	V_u (Unbalanced Speed) in Km/hour; $V_u = V_b$ (Balanced Speed) when $E_u = 0$ (kph)																				
0	0	5	7	8	9	10	11	12	13	14	15	15	16	17	17	18	19	19	20	20	21
5	5	7	8	9	10	11	12	13	14	15	15	16	17	17	18	19	19	20	20	21	21
10	7	8	9	10	11	12	13	14	15	15	16	17	17	18	19	19	20	20	21	21	22
15	8	9	10	11	12	13	14	15	15	16	17	17	18	19	19	20	20	21	21	22	22
20	9	10	11	12	13	14	15	15	16	17	17	18	19	19	20	20	21	21	22	22	23
25	10	11	12	13	14	15	15	16	17	17	18	19	19	20	20	21	21	22	22	23	23
30	11	12	13	14	15	15	16	17	17	18	19	19	20	20	21	21	22	22	23	23	24
35	12	13	14	15	15	16	17	17	18	19	19	20	20	21	21	22	22	23	23	24	24
40	13	14	15	15	16	17	17	18	19	19	20	20	21	21	22	22	23	23	24	24	24
45	14	15	15	16	17	17	18	19	19	20	20	21	21	22	22	23	23	24	24	24	25
50	15	15	16	17	17	18	19	19	20	20	21	21	22	22	23	23	24	24	24	25	25
55	15	16	17	17	18	19	19	20	20	21	21	22	22	23	23	24	24	24	25	25	26
60	16	17	17	18	19	19	20	20	21	21	22	22	23	23	24	24	24	25	25	26	26
65	17	17	18	19	19	20	20	21	21	22	22	23	23	24	24	24	25	25	26	26	27
70	17	18	19	19	20	20	21	21	22	22	23	23	24	24	24	25	25	26	26	27	27
75	18	19	19	20	20	21	21	22	22	23	23	24	24	24	25	25	26	26	27	27	27
80	19	19	20	20	21	21	22	22	23	23	24	24	24	25	25	26	26	27	27	27	28
85	19	20	20	21	21	22	22	23	23	24	24	24	25	25	26	26	27	27	27	28	28
90	20	20	21	21	22	22	23	23	24	24	24	25	25	26	26	27	27	27	28	28	28
95	20	21	21	22	22	23	23	24	24	24	25	25	26	26	27	27	27	28	28	28	29
100	21	21	22	22	23	23	24	24	24	25	25	26	26	27	27	27	28	28	28	29	29

Figure 4.3 (2 of 27)

Vu Versus Eu plus Ea for R50

R (m) E_a (mm)	75 0	75 5	75 10	75 15	75 20	75 25	75 30	75 35	75 40	75 45	75 50	75 55	75 60	75 65	75 70	75 75	75 80	75 85	75 90	75 95	75 100
E_u (mm)	V_u (Unbalanced Speed) in Km/hour; $V_u = V_b$ (Balanced Speed) when $E_u = 0$ (kph)																				
0	0	6	8	10	11	13	14	15	16	17	18	19	20	20	21	22	23	23	24	25	25
5	6	8	10	11	13	14	15	16	17	18	19	20	20	21	22	23	23	24	25	25	26
10	8	10	11	13	14	15	16	17	18	19	20	20	21	22	23	23	24	25	25	26	27
15	10	11	13	14	15	16	17	18	19	20	20	21	22	23	23	24	25	25	26	27	27
20	11	13	14	15	16	17	18	19	20	20	21	22	23	23	24	25	25	26	27	27	28
25	13	14	15	16	17	18	19	20	20	21	22	23	23	24	25	25	26	27	27	28	28
30	14	15	16	17	18	19	20	20	21	22	23	23	24	25	25	26	27	27	28	28	29
35	15	16	17	18	19	20	20	21	22	23	23	24	25	25	26	27	27	28	28	29	29
40	16	17	18	19	20	20	21	22	23	23	24	25	25	26	27	27	28	28	29	29	30
45	17	18	19	20	20	21	22	23	23	24	25	25	26	27	27	28	28	29	29	30	30
50	18	19	20	20	21	22	23	23	24	25	25	26	27	27	28	28	29	29	30	30	31
55	19	20	20	21	22	23	23	24	25	25	26	27	27	28	28	29	29	30	30	31	32
60	20	20	21	22	23	23	24	25	25	26	27	27	28	28	29	29	30	30	31	32	32
65	20	21	22	23	23	24	25	25	26	27	27	28	28	29	29	30	30	31	32	32	33
70	21	22	23	23	24	25	25	26	27	27	28	28	29	29	30	30	31	32	32	33	33
75	22	23	23	24	25	25	26	27	27	28	28	29	29	30	30	31	32	32	33	33	33
80	23	23	24	25	25	26	27	27	28	28	29	29	30	30	31	32	32	33	33	33	34
85	23	24	25	25	26	27	27	28	28	29	29	30	30	31	32	32	33	33	33	34	34
90	24	25	25	26	27	27	28	28	29	29	30	30	31	32	32	33	33	33	34	34	35
95	25	25	26	27	27	28	28	29	29	30	30	31	32	32	33	33	33	34	34	35	35
100	25	26	27	27	28	28	29	29	30	30	31	32	32	33	33	33	34	34	35	35	36

Figure 4.3 (3 of 27)

Vu Versus Eu plus Ea for R75

R (m) E_a (mm)	100 0	100 5	100 10	100 15	100 20	100 25	100 30	100 35	100 40	100 45	100 50	100 55	100 60	100 65	100 70	100 75	100 80	100 85	100 90	100 95	100 100
E_u (mm)	V_u (Unbalanced Speed) in Km/hour; $V_u = V_b$ (Balanced Speed) when $E_u = 0$ (kph)																				
0	0	7	9	11	13	15	16	17	19	20	21	22	23	24	24	25	26	27	28	28	29
5	7	9	11	13	15	16	17	19	20	21	22	23	24	24	25	26	27	28	28	29	30
10	9	11	13	15	16	17	19	20	21	22	23	24	24	25	26	27	28	28	29	30	31
15	11	13	15	16	17	19	20	21	22	23	24	24	25	26	27	28	28	29	30	31	31
20	13	15	16	17	19	20	21	22	23	24	24	25	26	27	28	28	29	30	31	31	32
25	15	16	17	19	20	21	22	23	24	24	25	26	27	28	28	29	30	31	31	32	33
30	16	17	19	20	21	22	23	24	24	25	26	27	28	28	29	30	31	31	32	33	33
35	17	19	20	21	22	23	24	24	25	26	27	28	28	29	30	31	31	32	33	33	34
40	19	20	21	22	23	24	24	25	26	27	28	28	29	30	31	31	32	33	33	34	35
45	20	21	22	23	24	24	25	26	27	28	28	29	30	31	31	32	33	33	34	35	35
50	21	22	23	24	24	25	26	27	28	28	29	30	31	31	32	33	33	34	35	35	36
55	22	23	24	24	25	26	27	28	28	29	30	31	31	32	33	33	34	35	35	36	36
60	23	24	24	25	26	27	28	28	29	30	31	31	32	33	33	34	35	35	36	36	37
65	24	24	25	26	27	28	28	29	30	31	31	32	33	33	34	35	35	36	36	37	38
70	24	25	26	27	28	28	29	30	31	31	32	33	33	34	35	35	36	36	37	38	38
75	25	26	27	28	28	29	30	31	31	32	33	33	34	35	35	36	36	37	38	38	39
80	26	27	28	28	29	30	31	31	32	33	33	34	35	35	36	36	37	38	38	39	39
85	27	28	28	29	30	31	31	32	33	33	34	35	35	36	36	37	38	38	39	39	40
90	28	28	29	30	31	31	32	33	33	34	35	35	36	36	37	38	38	39	39	40	40
95	28	29	30	31	31	32	33	33	34	35	35	36	36	37	38	38	39	39	40	40	41
100	29	30	31	31	32	33	33	34	35	35	36	36	37	38	38	39	39	40	40	41	41

Figure 4.3 (4 of 27)

Vu Versus Eu plus Ea for R100

R (m) E_a (mm)	125 0	125 5	125 10	125 15	125 20	125 25	125 30	125 35	125 40	125 45	125 50	125 55	125 60	125 65	125 70	125 75	125 80	125 85	125 90	125 95	125 100
E_u (mm)	V_u (Unbalanced Speed) in Km/hour; $V_u = V_b$ (Balanced Speed) when $E_u = 0$ (kph)																				
0	0	7	10	13	15	16	18	19	21	22	23	24	25	26	27	28	29	30	31	32	33
5	7	10	13	15	16	18	19	21	22	23	24	25	26	27	28	29	30	31	32	33	33
10	10	13	15	16	18	19	21	22	23	24	25	26	27	28	29	30	31	32	33	33	34
15	13	15	16	18	19	21	22	23	24	25	26	27	28	29	30	31	32	33	33	34	35
20	15	16	18	19	21	22	23	24	25	26	27	28	29	30	31	32	33	33	34	35	36
25	16	18	19	21	22	23	24	25	26	27	28	29	30	31	32	33	33	34	35	36	37
30	18	19	21	22	23	24	25	26	27	28	29	30	31	32	33	33	34	35	36	37	37
35	19	21	22	23	24	25	26	27	28	29	30	31	32	33	33	34	35	36	37	37	38
40	21	22	23	24	25	26	27	28	29	30	31	32	33	33	34	35	36	37	37	38	39
45	22	23	24	25	26	27	28	29	30	31	32	33	33	34	35	36	37	37	38	39	39
50	23	24	25	26	27	28	29	30	31	32	33	33	34	35	36	37	37	38	39	39	40
55	24	25	26	27	28	29	30	31	32	33	33	34	35	36	37	37	38	39	39	40	41
60	25	26	27	28	29	30	31	32	33	33	34	35	36	37	37	38	39	39	40	41	41
65	26	27	28	29	30	31	32	33	33	34	35	36	37	37	38	39	39	40	41	41	42
70	27	28	29	30	31	32	33	33	34	35	36	37	37	38	39	39	40	41	41	42	43
75	28	29	30	31	32	33	33	34	35	36	37	37	38	39	39	40	41	41	42	43	43
80	29	30	31	32	33	33	34	35	36	37	37	38	39	39	40	41	41	42	43	43	44
85	30	31	32	33	33	34	35	36	37	37	38	39	39	40	41	41	42	43	43	44	44
90	31	32	33	33	34	35	36	37	37	38	39	39	40	41	41	42	43	43	44	44	45
95	32	33	33	34	35	36	37	37	38	39	39	40	41	41	42	43	43	44	44	45	46
100	33	33	34	35	36	37	37	38	39	39	40	41	41	42	43	43	44	44	45	46	46

Figure 4.3 (5 of 27)

Vu Versus Eu plus Ea for R125

R (m) E_a (mm)	150 0	150 5	150 10	150 15	150 20	150 25	150 30	150 35	150 40	150 45	150 50	150 55	150 60	150 65	150 70	150 75	150 80	150 85	150 90	150 95	150 100
E_u (mm)	V_u (Unbalanced Speed) in Km/hour; $V_u = V_b$ (Balanced Speed) when $E_u = 0$ (kph)																				
0	0	8	11	14	16	18	20	21	23	24	25	27	28	29	30	31	32	33	34	35	36
5	8	11	14	16	18	20	21	23	24	25	27	28	29	30	31	32	33	34	35	36	37
10	11	14	16	18	20	21	23	24	25	27	28	29	30	31	32	33	34	35	36	37	38
15	14	16	18	20	21	23	24	25	27	28	29	30	31	32	33	34	35	36	37	38	38
20	16	18	20	21	23	24	25	27	28	29	30	31	32	33	34	35	36	37	38	38	39
25	18	20	21	23	24	25	27	28	29	30	31	32	33	34	35	36	37	38	38	39	40
30	20	21	23	24	25	27	28	29	30	31	32	33	34	35	36	37	38	38	39	40	41
35	21	23	24	25	27	28	29	30	31	32	33	34	35	36	37	38	38	39	40	41	42
40	23	24	25	27	28	29	30	31	32	33	34	35	36	37	38	38	39	40	41	42	42
45	24	25	27	28	29	30	31	32	33	34	35	36	37	38	38	39	40	41	42	42	43
50	25	27	28	29	30	31	32	33	34	35	36	37	38	38	39	40	41	42	42	43	44
55	27	28	29	30	31	32	33	34	35	36	37	38	38	39	40	41	42	42	43	44	45
60	28	29	30	31	32	33	34	35	36	37	38	38	39	40	41	42	42	43	44	45	45
65	29	30	31	32	33	34	35	36	37	38	38	39	40	41	42	42	43	44	45	45	46
70	30	31	32	33	34	35	36	37	38	38	39	40	41	42	42	43	44	45	45	46	47
75	31	32	33	34	35	36	37	38	38	39	40	41	42	42	43	44	45	45	46	47	47
80	32	33	34	35	36	37	38	38	39	40	41	42	42	43	44	45	45	46	47	47	48
85	33	34	35	36	37	38	38	39	40	41	42	42	43	44	45	45	46	47	47	48	49
90	34	35	36	37	38	38	39	40	41	42	42	43	44	45	45	46	47	47	48	49	49
95	35	36	37	38	38	39	40	41	42	42	43	44	45	45	46	47	47	48	49	49	50
100	36	37	38	38	39	40	41	42	42	43	44	45	45	46	47	47	48	49	49	50	51

Figure 4.3 (6 of 27)

Vu Versus Eu plus Ea for R150

R (m) E_a (mm)	180 0	180 5	180 10	180 15	180 20	180 25	180 30	180 35	180 40	180 45	180 50	180 55	180 60	180 65	180 70	180 75	180 80	180 85	180 90	180 95	180 100
E_u (mm)	V_u (Unbalanced Speed) in Km/hour; $V_u = V_b$ (Balanced Speed) when $E_u = 0$ (kph)																				
0	0	9	12	15	18	20	21	23	25	26	28	29	30	32	33	34	35	36	37	38	39
5	9	12	15	18	20	21	23	25	26	28	29	30	32	33	34	35	36	37	38	39	40
10	12	15	18	20	21	23	25	26	28	29	30	32	33	34	35	36	37	38	39	40	41
15	15	18	20	21	23	25	26	28	29	30	32	33	34	35	36	37	38	39	40	41	42
20	18	20	21	23	25	26	28	29	30	32	33	34	35	36	37	38	39	40	41	42	43
25	20	21	23	25	26	28	29	30	32	33	34	35	36	37	38	39	40	41	42	43	44
30	21	23	25	26	28	29	30	32	33	34	35	36	37	38	39	40	41	42	43	44	45
35	23	25	26	28	29	30	32	33	34	35	36	37	38	39	40	41	42	43	44	45	46
40	25	26	28	29	30	32	33	34	35	36	37	38	39	40	41	42	43	44	45	46	46
45	26	28	29	30	32	33	34	35	36	37	38	39	40	41	42	43	44	45	46	46	47
50	28	29	30	32	33	34	35	36	37	38	39	40	41	42	43	44	45	46	46	47	48
55	29	30	32	33	34	35	36	37	38	39	40	41	42	43	44	45	46	46	47	48	49
60	30	32	33	34	35	36	37	38	39	40	41	42	43	44	45	46	46	47	48	49	50
65	32	33	34	35	36	37	38	39	40	41	42	43	44	45	46	46	47	48	49	50	50
70	33	34	35	36	37	38	39	40	41	42	43	44	45	46	46	47	48	49	50	50	51
75	34	35	36	37	38	39	40	41	42	43	44	45	46	46	47	48	49	50	50	51	52
80	35	36	37	38	39	40	41	42	43	44	45	46	46	47	48	49	50	50	51	52	53
85	36	37	38	39	40	41	42	43	44	45	46	46	47	48	49	50	50	51	52	53	53
90	37	38	39	40	41	42	43	44	45	46	46	47	48	49	50	50	51	52	53	53	54
95	38	39	40	41	42	43	44	45	46	46	47	48	49	50	50	51	52	53	53	54	55
100	39	40	41	42	43	44	45	46	46	47	48	49	50	50	51	52	53	53	54	55	55

Figure 4.3 (7 of 27)

Vu Versus Eu plus Ea for R180

R (m) E_a (mm)	200 0	200 5	200 10	200 15	200 20	200 25	200 30	200 35	200 40	200 45	200 50	200 55	200 60	200 65	200 70	200 75	200 80	200 85	200 90	200 95	200 100
E_u (mm)	V_u (Unbalanced Speed) in Km/hour; $V_u = V_b$ (Balanced Speed) when $E_u = 0$ (kph)																				
0	0	9	13	16	19	21	23	24	26	28	29	31	32	33	35	36	37	38	39	40	41
5	9	13	16	19	21	23	24	26	28	29	31	32	33	35	36	37	38	39	40	41	42
10	13	16	19	21	23	24	26	28	29	31	32	33	35	36	37	38	39	40	41	42	43
15	16	19	21	23	24	26	28	29	31	32	33	35	36	37	38	39	40	41	42	43	44
20	19	21	23	24	26	28	29	31	32	33	35	36	37	38	39	40	41	42	43	44	45
25	21	23	24	26	28	29	31	32	33	35	36	37	38	39	40	41	42	43	44	45	46
30	23	24	26	28	29	31	32	33	35	36	37	38	39	40	41	42	43	44	45	46	47
35	24	26	28	29	31	32	33	35	36	37	38	39	40	41	42	43	44	45	46	47	48
40	26	28	29	31	32	33	35	36	37	38	39	40	41	42	43	44	45	46	47	48	49
45	28	29	31	32	33	35	36	37	38	39	40	41	42	43	44	45	46	47	48	49	50
50	29	31	32	33	35	36	37	38	39	40	41	42	43	44	45	46	47	48	49	50	51
55	31	32	33	35	36	37	38	39	40	41	42	43	44	45	46	47	48	49	50	51	51
60	32	33	35	36	37	38	39	40	41	42	43	44	45	46	47	48	49	50	51	51	52
65	33	35	36	37	38	39	40	41	42	43	44	45	46	47	48	49	50	51	51	52	53
70	35	36	37	38	39	40	41	42	43	44	45	46	47	48	49	50	51	51	52	53	54
75	36	37	38	39	40	41	42	43	44	45	46	47	48	49	50	51	51	52	53	54	55
80	37	38	39	40	41	42	43	44	45	46	47	48	49	50	51	51	52	53	54	55	55
85	38	39	40	41	42	43	44	45	46	47	48	49	50	51	51	52	53	54	55	55	56
90	39	40	41	42	43	44	45	46	47	48	49	50	51	51	52	53	54	55	55	56	57
95	40	41	42	43	44	45	46	47	48	49	50	51	51	52	53	54	55	55	56	57	58
100	41	42	43	44	45	46	47	48	49	50	51	51	52	53	54	55	55	56	57	58	58

Figure 4.3 (8 of 27)

Vu Versus Eu plus Ea for R200

R (m) E_a (mm)	250 0	250 5	250 10	250 15	250 20	250 25	250 30	250 35	250 40	250 45	250 50	250 55	250 60	250 65	250 70	250 75	250 80	250 85	250 90	250 95	250 100
E_u (mm)	V_u (Unbalanced Speed) in Km/hour; $V_u = V_b$ (Balanced Speed) when $E_u = 0$ (kph)																				
0	0	10	15	18	21	23	25	27	29	31	33	34	36	37	39	40	41	43	44	45	46
5	10	15	18	21	23	25	27	29	31	33	34	36	37	39	40	41	43	44	45	46	47
10	15	18	21	23	25	27	29	31	33	34	36	37	39	40	41	43	44	45	46	47	48
15	18	21	23	25	27	29	31	33	34	36	37	39	40	41	43	44	45	46	47	48	50
20	21	23	25	27	29	31	33	34	36	37	39	40	41	43	44	45	46	47	48	50	51
25	23	25	27	29	31	33	34	36	37	39	40	41	43	44	45	46	47	48	50	51	52
30	25	27	29	31	33	34	36	37	39	40	41	43	44	45	46	47	48	50	51	52	53
35	27	29	31	33	34	36	37	39	40	41	43	44	45	46	47	48	50	51	52	53	54
40	29	31	33	34	36	37	39	40	41	43	44	45	46	47	48	50	51	52	53	54	55
45	31	33	34	36	37	39	40	41	43	44	45	46	47	48	50	51	52	53	54	55	56
50	33	34	36	37	39	40	41	43	44	45	46	47	48	50	51	52	53	54	55	56	57
55	34	36	37	39	40	41	43	44	45	46	47	48	50	51	52	53	54	55	56	57	57
60	36	37	39	40	41	43	44	45	46	47	48	50	51	52	53	54	55	56	57	57	58
65	37	39	40	41	43	44	45	46	47	48	50	51	52	53	54	55	56	57	57	58	59
70	39	40	41	43	44	45	46	47	48	50	51	52	53	54	55	56	57	57	58	59	60
75	40	41	43	44	45	46	47	48	50	51	52	53	54	55	56	57	57	58	59	60	61
80	41	43	44	45	46	47	48	50	51	52	53	54	55	56	57	57	58	59	60	61	62
85	43	44	45	46	47	48	50	51	52	53	54	55	56	57	57	58	59	60	61	62	63
90	44	45	46	47	48	50	51	52	53	54	55	56	57	57	58	59	60	61	62	63	64
95	45	46	47	48	50	51	52	53	54	55	56	57	57	58	59	60	61	62	63	64	64
100	46	47	48	50	51	52	53	54	55	56	57	57	58	59	60	61	62	63	64	64	65

Figure 4.3 (9 of 27)

Vu Versus Eu plus Ea for R250

R (m) E_a (mm)	300 0	300 5	300 10	300 15	300 20	300 25	300 30	300 35	300 40	300 45	300 50	300 55	300 60	300 65	300 70	300 75	300 80	300 85	300 90	300 95	300 100
E_u (mm)	V_u (Unbalanced Speed) in Km/hour; $V_u = V_b$ (Balanced Speed) when $E_u = 0$ (kph)																				
0	0	11	16	20	23	25	28	30	32	34	36	38	39	41	42	44	45	47	48	49	51
5	11	16	20	23	25	28	30	32	34	36	38	39	41	42	44	45	47	48	49	51	52
10	16	20	23	25	28	30	32	34	36	38	39	41	42	44	45	47	48	49	51	52	53
15	20	23	25	28	30	32	34	36	38	39	41	42	44	45	47	48	49	51	52	53	54
20	23	25	28	30	32	34	36	38	39	41	42	44	45	47	48	49	51	52	53	54	55
25	25	28	30	32	34	36	38	39	41	42	44	45	47	48	49	51	52	53	54	55	57
30	28	30	32	34	36	38	39	41	42	44	45	47	48	49	51	52	53	54	55	57	58
35	30	32	34	36	38	39	41	42	44	45	47	48	49	51	52	53	54	55	57	58	59
40	32	34	36	38	39	41	42	44	45	47	48	49	51	52	53	54	55	57	58	59	60
45	34	36	38	39	41	42	44	45	47	48	49	51	52	53	54	55	57	58	59	60	61
50	36	38	39	41	42	44	45	47	48	49	51	52	53	54	55	57	58	59	60	61	62
55	38	39	41	42	44	45	47	48	49	51	52	53	54	55	57	58	59	60	61	62	63
60	39	41	42	44	45	47	48	49	51	52	53	54	55	57	58	59	60	61	62	63	64
65	41	42	44	45	47	48	49	51	52	53	54	55	57	58	59	60	61	62	63	64	65
70	42	44	45	47	48	49	51	52	53	54	55	57	58	59	60	61	62	63	64	65	66
75	44	45	47	48	49	51	52	53	54	55	57	58	59	60	61	62	63	64	65	66	67
80	45	47	48	49	51	52	53	54	55	57	58	59	60	61	62	63	64	65	66	67	68
85	47	48	49	51	52	53	54	55	57	58	59	60	61	62	63	64	65	66	67	68	69
90	48	49	51	52	53	54	55	57	58	59	60	61	62	63	64	65	66	67	68	69	70
95	49	51	52	53	54	55	57	58	59	60	61	62	63	64	65	66	67	68	69	70	71
100	51	52	53	54	55	57	58	59	60	61	62	63	64	65	66	67	68	69	70	71	72

Figure 4.3 (10 of 27)

Vu Versus Eu plus Ea for R300

R (m) E_a (mm)	350 0	350 5	350 10	350 15	350 20	350 25	350 30	350 35	350 40	350 45	350 50	350 55	350 60	350 65	350 70	350 75	350 80	350 85	350 90	350 95	350 100
E_u (mm)	V_u (Unbalanced Speed) in Km/hour; $V_u = V_b$ (Balanced Speed) when $E_u = 0$ (kph)																				
0	0	12	17	21	24	27	30	32	35	37	39	41	42	44	46	47	49	50	52	53	55
5	12	17	21	24	27	30	32	35	37	39	41	42	44	46	47	49	50	52	53	55	56
10	17	21	24	27	30	32	35	37	39	41	42	44	46	47	49	50	52	53	55	56	57
15	21	24	27	30	32	35	37	39	41	42	44	46	47	49	50	52	53	55	56	57	59
20	24	27	30	32	35	37	39	41	42	44	46	47	49	50	52	53	55	56	57	59	60
25	27	30	32	35	37	39	41	42	44	46	47	49	50	52	53	55	56	57	59	60	61
30	30	32	35	37	39	41	42	44	46	47	49	50	52	53	55	56	57	59	60	61	62
35	32	35	37	39	41	42	44	46	47	49	50	52	53	55	56	57	59	60	61	62	63
40	35	37	39	41	42	44	46	47	49	50	52	53	55	56	57	59	60	61	62	63	65
45	37	39	41	42	44	46	47	49	50	52	53	55	56	57	59	60	61	62	63	65	66
50	39	41	42	44	46	47	49	50	52	53	55	56	57	59	60	61	62	63	65	66	67
55	41	42	44	46	47	49	50	52	53	55	56	57	59	60	61	62	63	65	66	67	68
60	42	44	46	47	49	50	52	53	55	56	57	59	60	61	62	63	65	66	67	68	69
65	44	46	47	49	50	52	53	55	56	57	59	60	61	62	63	65	66	67	68	69	70
70	46	47	49	50	52	53	55	56	57	59	60	61	62	63	65	66	67	68	69	70	71
75	47	49	50	52	53	55	56	57	59	60	61	62	63	65	66	67	68	69	70	71	72
80	49	50	52	53	55	56	57	59	60	61	62	63	65	66	67	68	69	70	71	72	73
85	50	52	53	55	56	57	59	60	61	62	63	65	66	67	68	69	70	71	72	73	74
90	52	53	55	56	57	59	60	61	62	63	65	66	67	68	69	70	71	72	73	74	75
95	53	55	56	57	59	60	61	62	63	65	66	67	68	69	70	71	72	73	74	75	76
100	55	56	57	59	60	61	62	63	65	66	67	68	69	70	71	72	73	74	75	76	77

Figure 4.3 (11 of 27)

Vu Versus Eu plus Ea for R350

R (m) E_a (mm)	400 0	400 5	400 10	400 15	400 20	400 25	400 30	400 35	400 40	400 45	400 50	400 55	400 60	400 65	400 70	400 75	400 80	400 85	400 90	400 95	400 100
E_u (mm)	V_u (Unbalanced Speed) in Km/hour; $V_u = V_b$ (Balanced Speed) when $E_u = 0$ (kph)																				
0	0	13	19	23	26	29	32	35	37	39	41	43	45	47	49	51	52	54	55	57	58
5	13	19	23	26	29	32	35	37	39	41	43	45	47	49	51	52	54	55	57	58	60
10	19	23	26	29	32	35	37	39	41	43	45	47	49	51	52	54	55	57	58	60	61
15	23	26	29	32	35	37	39	41	43	45	47	49	51	52	54	55	57	58	60	61	63
20	26	29	32	35	37	39	41	43	45	47	49	51	52	54	55	57	58	60	61	63	64
25	29	32	35	37	39	41	43	45	47	49	51	52	54	55	57	58	60	61	63	64	65
30	32	35	37	39	41	43	45	47	49	51	52	54	55	57	58	60	61	63	64	65	67
35	35	37	39	41	43	45	47	49	51	52	54	55	57	58	60	61	63	64	65	67	68
40	37	39	41	43	45	47	49	51	52	54	55	57	58	60	61	63	64	65	67	68	69
45	39	41	43	45	47	49	51	52	54	55	57	58	60	61	63	64	65	67	68	69	70
50	41	43	45	47	49	51	52	54	55	57	58	60	61	63	64	65	67	68	69	70	72
55	43	45	47	49	51	52	54	55	57	58	60	61	63	64	65	67	68	69	70	72	73
60	45	47	49	51	52	54	55	57	58	60	61	63	64	65	67	68	69	70	72	73	74
65	47	49	51	52	54	55	57	58	60	61	63	64	65	67	68	69	70	72	73	74	75
70	49	51	52	54	55	57	58	60	61	63	64	65	67	68	69	70	72	73	74	75	76
75	51	52	54	55	57	58	60	61	63	64	65	67	68	69	70	72	73	74	75	76	77
80	52	54	55	57	58	60	61	63	64	65	67	68	69	70	72	73	74	75	76	77	78
85	54	55	57	58	60	61	63	64	65	67	68	69	70	72	73	74	75	76	77	78	79
90	55	57	58	60	61	63	64	65	67	68	69	70	72	73	74	75	76	77	78	79	80
95	57	58	60	61	63	64	65	67	68	69	70	72	73	74	75	76	77	78	79	80	
100	58	60	61	63	64	65	67	68	69	70	72	73	74	75	76	77	78	79	80		

Figure 4.3 (12 of 27)

Vu Versus Eu plus Ea for R400

R (m) E_a (mm)	450 0	450 5	450 10	450 15	450 20	450 25	450 30	450 35	450 40	450 45	450 50	450 55	450 60	450 65	450 70	450 75	450 80	450 85	450 90	450 95	450 100
E_u (mm)	V_u (Unbalanced Speed) in Km/hour; $V_u = V_b$ (Balanced Speed) when $E_u = 0$ (kph)																				
0	0	14	20	24	28	31	34	37	39	42	44	46	48	50	52	54	55	57	59	60	62
5	14	20	24	28	31	34	37	39	42	44	46	48	50	52	54	55	57	59	60	62	63
10	20	24	28	31	34	37	39	42	44	46	48	50	52	54	55	57	59	60	62	63	65
15	24	28	31	34	37	39	42	44	46	48	50	52	54	55	57	59	60	62	63	65	66
20	28	31	34	37	39	42	44	46	48	50	52	54	55	57	59	60	62	63	65	66	68
25	31	34	37	39	42	44	46	48	50	52	54	55	57	59	60	62	63	65	66	68	69
30	34	37	39	42	44	46	48	50	52	54	55	57	59	60	62	63	65	66	68	69	71
35	37	39	42	44	46	48	50	52	54	55	57	59	60	62	63	65	66	68	69	71	72
40	39	42	44	46	48	50	52	54	55	57	59	60	62	63	65	66	68	69	71	72	73
45	42	44	46	48	50	52	54	55	57	59	60	62	63	65	66	68	69	71	72	73	75
50	44	46	48	50	52	54	55	57	59	60	62	63	65	66	68	69	71	72	73	75	76
55	46	48	50	52	54	55	57	59	60	62	63	65	66	68	69	71	72	73	75	76	77
60	48	50	52	54	55	57	59	60	62	63	65	66	68	69	71	72	73	75	76	77	78
65	50	52	54	55	57	59	60	62	63	65	66	68	69	71	72	73	75	76	77	78	80
70	52	54	55	57	59	60	62	63	65	66	68	69	71	72	73	75	76	77	78	80	
75	54	55	57	59	60	62	63	65	66	68	69	71	72	73	75	76	77	78	80		
80	55	57	59	60	62	63	65	66	68	69	71	72	73	75	76	77	78	80			
85	57	59	60	62	63	65	66	68	69	71	72	73	75	76	77	78	80				
90	59	60	62	63	65	66	68	69	71	72	73	75	76	77	78	80					
95	60	62	63	65	66	68	69	71	72	73	75	76	77	78	80						
100	62	63	65	66	68	69	71	72	73	75	76	77	78	80							

Figure 4.3 (13 of 27)

Vu Versus Eu plus Ea for R450

R (m) E_a (mm)	500 0	500 5	500 10	500 15	500 20	500 25	500 30	500 35	500 40	500 45	500 50	500 55	500 60	500 65	500 70	500 75	500 80	500 85	500 90	500 95	500 100
E_u (mm)	V_u (Unbalanced Speed) in Km/hour; $V_u = V_b$ (Balanced Speed) when $E_u = 0$ (kph)																				
0	0	15	21	25	29	33	36	39	41	44	46	48	51	53	55	57	58	60	62	64	65
5	15	21	25	29	33	36	39	41	44	46	48	51	53	55	57	58	60	62	64	65	67
10	21	25	29	33	36	39	41	44	46	48	51	53	55	57	58	60	62	64	65	67	68
15	25	29	33	36	39	41	44	46	48	51	53	55	57	58	60	62	64	65	67	68	70
20	29	33	36	39	41	44	46	48	51	53	55	57	58	60	62	64	65	67	68	70	72
25	33	36	39	41	44	46	48	51	53	55	57	58	60	62	64	65	67	68	70	72	73
30	36	39	41	44	46	48	51	53	55	57	58	60	62	64	65	67	68	70	72	73	74
35	39	41	44	46	48	51	53	55	57	58	60	62	64	65	67	68	70	72	73	74	76
40	41	44	46	48	51	53	55	57	58	60	62	64	65	67	68	70	72	73	74	76	77
45	44	46	48	51	53	55	57	58	60	62	64	65	67	68	70	72	73	74	76	77	79
50	46	48	51	53	55	57	58	60	62	64	65	67	68	70	72	73	74	76	77	79	80
55	48	51	53	55	57	58	60	62	64	65	67	68	70	72	73	74	76	77	79	80	
60	51	53	55	57	58	60	62	64	65	67	68	70	72	73	74	76	77	79	80		
65	53	55	57	58	60	62	64	65	67	68	70	72	73	74	76	77	79	80			
70	55	57	58	60	62	64	65	67	68	70	72	73	74	76	77	79	80				
75	57	58	60	62	64	65	67	68	70	72	73	74	76	77	79	80					
80	58	60	62	64	65	67	68	70	72	73	74	76	77	79	80						
85	60	62	64	65	67	68	70	72	73	74	76	77	79	80							
90	62	64	65	67	68	70	72	73	74	76	77	79	80								
95	64	65	67	68	70	72	73	74	76	77	79	80									
100	65	67	68	70	72	73	74	76	77	79	80										

Figure 4.3 (14 of 27)

Vu Versus Eu plus Ea for R500

R (m) E_a (mm)	550 0	550 5	550 10	550 15	550 20	550 25	550 30	550 35	550 40	550 45	550 50	550 55	550 60	550 65	550 70	550 75	550 80	550 85	550 90	550 95	550 100
E_u (mm)	V_u (Unbalanced Speed) in Km/hour; $V_u = V_b$ (Balanced Speed) when $E_u = 0$ (kph)																				
0	0	15	22	27	31	34	38	41	43	46	48	51	53	55	57	59	61	63	65	67	68
5	15	22	27	31	34	38	41	43	46	48	51	53	55	57	59	61	63	65	67	68	70
10	22	27	31	34	38	41	43	46	48	51	53	55	57	59	61	63	65	67	68	70	72
15	27	31	34	38	41	43	46	48	51	53	55	57	59	61	63	65	67	68	70	72	73
20	31	34	38	41	43	46	48	51	53	55	57	59	61	63	65	67	68	70	72	73	75
25	34	38	41	43	46	48	51	53	55	57	59	61	63	65	67	68	70	72	73	75	77
30	38	41	43	46	48	51	53	55	57	59	61	63	65	67	68	70	72	73	75	77	78
35	41	43	46	48	51	53	55	57	59	61	63	65	67	68	70	72	73	75	77	78	80
40	43	46	48	51	53	55	57	59	61	63	65	67	68	70	72	73	75	77	78	80	
45	46	48	51	53	55	57	59	61	63	65	67	68	70	72	73	75	77	78	80		
50	48	51	53	55	57	59	61	63	65	67	68	70	72	73	75	77	78	80			
55	51	53	55	57	59	61	63	65	67	68	70	72	73	75	77	78	80				
60	53	55	57	59	61	63	65	67	68	70	72	73	75	77	78	80					
65	55	57	59	61	63	65	67	68	70	72	73	75	77	78	80						
70	57	59	61	63	65	67	68	70	72	73	75	77	78	80							
75	59	61	63	65	67	68	70	72	73	75	77	78	80								
80	61	63	65	67	68	70	72	73	75	77	78	80									
85	63	65	67	68	70	72	73	75	77	78	80										
90	65	67	68	70	72	73	75	77	78	80											
95	67	68	70	72	73	75	77	78	80												
100	68	70	72	73	75	77	78	80													

Figure 4.3 (15 of 27)

Vu Versus Eu plus Ea for R550

R (m) E_a (mm)	600 0	600 5	600 10	600 15	600 20	600 25	600 30	600 35	600 40	600 45	600 50	600 55	600 60	600 65	600 70	600 75	600 80	600 85	600 90	600 95	600 100
E_u (mm)	V_u (Unbalanced Speed) in Km/hour; $V_u = V_b$ (Balanced Speed) when $E_u = 0$ (kph)																				
0	0	16	23	28	32	36	39	42	45	48	51	53	55	58	60	62	64	66	68	70	72
5	16	23	28	32	36	39	42	45	48	51	53	55	58	60	62	64	66	68	70	72	73
10	23	28	32	36	39	42	45	48	51	53	55	58	60	62	64	66	68	70	72	73	75
15	28	32	36	39	42	45	48	51	53	55	58	60	62	64	66	68	70	72	73	75	77
20	32	36	39	42	45	48	51	53	55	58	60	62	64	66	68	70	72	73	75	77	78
25	36	39	42	45	48	51	53	55	58	60	62	64	66	68	70	72	73	75	77	78	80
30	39	42	45	48	51	53	55	58	60	62	64	66	68	70	72	73	75	77	78	80	
35	42	45	48	51	53	55	58	60	62	64	66	68	70	72	73	75	77	78	80		
40	45	48	51	53	55	58	60	62	64	66	68	70	72	73	75	77	78	80			
45	48	51	53	55	58	60	62	64	66	68	70	72	73	75	77	78	80				
50	51	53	55	58	60	62	64	66	68	70	72	73	75	77	78	80					
55	53	55	58	60	62	64	66	68	70	72	73	75	77	78	80						
60	55	58	60	62	64	66	68	70	72	73	75	77	78	80							
65	58	60	62	64	66	68	70	72	73	75	77	78	80								
70	60	62	64	66	68	70	72	73	75	77	78	80									
75	62	64	66	68	70	72	73	75	77	78	80										
80	64	66	68	70	72	73	75	77	78	80											
85	66	68	70	72	73	75	77	78	80												
90	68	70	72	73	75	77	78	80													
95	70	72	73	75	77	78	80														
100	72	73	75	77	78	80															

Figure 4.3 (16 of 27)

Vu Versus Eu plus Ea for R600

R (m) E_a (mm)	650 0	650 5	650 10	650 15	650 20	650 25	650 30	650 35	650 40	650 45	650 50	650 55	650 60	650 65	650 70	650 75	650 80	650 85	650 90	650 95	650 100
E_u (mm)	V_u (Unbalanced Speed) in Km/hour; $V_u = V_b$ (Balanced Speed) when $E_u = 0$ (kph)																				
0	0	17	24	29	33	37	41	44	47	50	53	55	58	60	62	64	67	69	71	73	74
5	17	24	29	33	37	41	44	47	50	53	55	58	60	62	64	67	69	71	73	74	76
10	24	29	33	37	41	44	47	50	53	55	58	60	62	64	67	69	71	73	74	76	78
15	29	33	37	41	44	47	50	53	55	58	60	62	64	67	69	71	73	74	76	78	80
20	33	37	41	44	47	50	53	55	58	60	62	64	67	69	71	73	74	76	78	80	
25	37	41	44	47	50	53	55	58	60	62	64	67	69	71	73	74	76	78	80		
30	41	44	47	50	53	55	58	60	62	64	67	69	71	73	74	76	78	80			
35	44	47	50	53	55	58	60	62	64	67	69	71	73	74	76	78	80				
40	47	50	53	55	58	60	62	64	67	69	71	73	74	76	78	80					
45	50	53	55	58	60	62	64	67	69	71	73	74	76	78	80						
50	53	55	58	60	62	64	67	69	71	73	74	76	78	80							
55	55	58	60	62	64	67	69	71	73	74	76	78	80								
60	58	60	62	64	67	69	71	73	74	76	78	80									
65	60	62	64	67	69	71	73	74	76	78	80										
70	62	64	67	69	71	73	74	76	78	80											
75	64	67	69	71	73	74	76	78	80												
80	67	69	71	73	74	76	78	80													
85	69	71	73	74	76	78	80														
90	71	73	74	76	78	80															
95	73	74	76	78	80																
100	74	76	78	80																	

Figure 4.3 (17 of 27)

Vu Versus Eu plus Ea for R650

R (m) E_a (mm)	700 0	700 5	700 10	700 15	700 20	700 25	700 30	700 35	700 40	700 45	700 50	700 55	700 60	700 65	700 70	700 75	700 80	700 85	700 90	700 95	700 100
E_u (mm)	V_u (Unbalanced Speed) in Km/hour; $V_u = V_b$ (Balanced Speed) when $E_u = 0$ (kph)																				
0	0	17	24	30	35	39	42	46	49	52	55	57	60	62	65	67	69	71	73	75	77
5	17	24	30	35	39	42	46	49	52	55	57	60	62	65	67	69	71	73	75	77	79
10	24	30	35	39	42	46	49	52	55	57	60	62	65	67	69	71	73	75	77	79	
15	30	35	39	42	46	49	52	55	57	60	62	65	67	69	71	73	75	77	79		
20	35	39	42	46	49	52	55	57	60	62	65	67	69	71	73	75	77	79			
25	39	42	46	49	52	55	57	60	62	65	67	69	71	73	75	77	79				
30	42	46	49	52	55	57	60	62	65	67	69	71	73	75	77	79					
35	46	49	52	55	57	60	62	65	67	69	71	73	75	77	79						
40	49	52	55	57	60	62	65	67	69	71	73	75	77	79							
45	52	55	57	60	62	65	67	69	71	73	75	77	79								
50	55	57	60	62	65	67	69	71	73	75	77	79									
55	57	60	62	65	67	69	71	73	75	77	79										
60	60	62	65	67	69	71	73	75	77	79											
65	62	65	67	69	71	73	75	77	79												
70	65	67	69	71	73	75	77	79													
75	67	69	71	73	75	77	79														
80	69	71	73	75	77	79															
85	71	73	75	77	79																
90	73	75	77	79																	
95	75	77	79																		
100	77	79																			

Figure 4.3 (18 of 27)

Vu Versus Eu plus Ea for R700

R (m) E_a (mm)	750 0	750 5	750 10	750 15	750 20	750 25	750 30	750 35	750 40	750 45	750 50	750 55	750 60	750 65	750 70	750 75	750 80	750 85	750 90	750 95	750 100
E_u (mm)	V_u (Unbalanced Speed) in Km/hour; $V_u = V_b$ (Balanced Speed) when $E_u = 0$ (kph)																				
0	0	18	25	31	36	40	44	47	51	54	57	59	62	64	67	69	72	74	76	78	80
5	18	25	31	36	40	44	47	51	54	57	59	62	64	67	69	72	74	76	78	80	
10	25	31	36	40	44	47	51	54	57	59	62	64	67	69	72	74	76	78	80		
15	31	36	40	44	47	51	54	57	59	62	64	67	69	72	74	76	78	80			
20	36	40	44	47	51	54	57	59	62	64	67	69	72	74	76	78	80				
25	40	44	47	51	54	57	59	62	64	67	69	72	74	76	78	80					
30	44	47	51	54	57	59	62	64	67	69	72	74	76	78	80						
35	47	51	54	57	59	62	64	67	69	72	74	76	78	80							
40	51	54	57	59	62	64	67	69	72	74	76	78	80								
45	54	57	59	62	64	67	69	72	74	76	78	80									
50	57	59	62	64	67	69	72	74	76	78	80										
55	59	62	64	67	69	72	74	76	78	80											
60	62	64	67	69	72	74	76	78	80												
65	64	67	69	72	74	76	78	80													
70	67	69	72	74	76	78	80														
75	69	72	74	76	78	80															
80	72	74	76	78	80																
85	74	76	78	80																	
90	76	78	80																		
95	78	80																			
100	80																				

Figure 4.3 (19 of 27)

Vu Versus Eu plus Ea for R750

R (m) E_a (mm)	800 0	800 5	800 10	800 15	800 20	800 25	800 30	800 35	800 40	800 45	800 50	800 55	800 60	800 65	800 70	800 75	800 80	800 85	800 90	800 95	800 100
E_u (mm)	V_u (Unbalanced Speed) in Km/hour; $V_u = V_b$ (Balanced Speed) when $E_u = 0$ (kph)																				
0	0	19	26	32	37	41	45	49	52	55	58	61	64	67	69	72	74	76	78	80	
5	19	26	32	37	41	45	49	52	55	58	61	64	67	69	72	74	76	78	80		
10	26	32	37	41	45	49	52	55	58	61	64	67	69	72	74	76	78	80			
15	32	37	41	45	49	52	55	58	61	64	67	69	72	74	76	78	80				
20	37	41	45	49	52	55	58	61	64	67	69	72	74	76	78	80					
25	41	45	49	52	55	58	61	64	67	69	72	74	76	78	80						
30	45	49	52	55	58	61	64	67	69	72	74	76	78	80							
35	49	52	55	58	61	64	67	69	72	74	76	78	80								
40	52	55	58	61	64	67	69	72	74	76	78	80									
45	55	58	61	64	67	69	72	74	76	78	80										
50	58	61	64	67	69	72	74	76	78	80											
55	61	64	67	69	72	74	76	78	80												
60	64	67	69	72	74	76	78	80													
65	67	69	72	74	76	78	80														
70	69	72	74	76	78	80															
75	72	74	76	78	80																
80	74	76	78	80																	
85	76	78	80																		
90	78	80																			
95	80																				
100																					

Figure 4.3 (20 of 27)

Vu Versus Eu plus Ea for R800

R (m) E_a (mm)	900 0	900 5	900 10	900 15	900 20	900 25	900 30	900 35	900 40	900 45	900 50	900 55	900 60	900 65	900 70	900 75	900 80	900 85	900 90	900 95	900 100
E_u (mm)	V_u (Unbalanced Speed) in Km/hour; $V_u = V_b$ (Balanced Speed) when $E_u = 0$ (kph)																				
0	0	20	28	34	39	44	48	52	55	59	62	65	68	71	73	76	78	81			
5	20	28	34	39	44	48	52	55	59	62	65	68	71	73	76	78	81				
10	28	34	39	44	48	52	55	59	62	65	68	71	73	76	78	81					
15	34	39	44	48	52	55	59	62	65	68	71	73	76	78	81						
20	39	44	48	52	55	59	62	65	68	71	73	76	78	81							
25	44	48	52	55	59	62	65	68	71	73	76	78	81								
30	48	52	55	59	62	65	68	71	73	76	78	81									
35	52	55	59	62	65	68	71	73	76	78	81										
40	55	59	62	65	68	71	73	76	78	81											
45	59	62	65	68	71	73	76	78	81												
50	62	65	68	71	73	76	78	81													
55	65	68	71	73	76	78	81														
60	68	71	73	76	78	81															
65	71	73	76	78	81																
70	73	76	78	81																	
75	76	78	81																		
80	78	81																			
85	81																				
90																					
95																					
100																					

Figure 4.3 (21 of 27)

Vu Versus Eu plus Ea for R900

R (m) E_a (mm)	1000 0	1000 5	1000 10	1000 15	1000 20	1000 25	1000 30	1000 35	1000 40	1000 45	1000 50	1000 55	1000 60	1000 65	1000 70	1000 75	1000 80	1000 85	1000 90	1000 95	1000 100
E_u (mm)	V_u (Unbalanced Speed) in Km/hour; $V_u = V_b$ (Balanced Speed) when $E_u = 0$ (kph)																				
0	0	21	29	36	41	46	51	55	58	62	65	68	72	74	77	80					
5	21	29	36	41	46	51	55	58	62	65	68	72	74	77	80						
10	29	36	41	46	51	55	58	62	65	68	72	74	77	80							
15	36	41	46	51	55	58	62	65	68	72	74	77	80								
20	41	46	51	55	58	62	65	68	72	74	77	80									
25	46	51	55	58	62	65	68	72	74	77	80										
30	51	55	58	62	65	68	72	74	77	80											
35	55	58	62	65	68	72	74	77	80												
40	58	62	65	68	72	74	77	80													
45	62	65	68	72	74	77	80														
50	65	68	72	74	77	80															
55	68	72	74	77	80																
60	72	74	77	80																	
65	74	77	80																		
70	77	80																			
75	80																				
80																					
85																					
90																					
95																					
100																					

Figure 4.3 (22 of 27)

Vu Versus Eu plus Ea for R1000

R (m) E_a (mm)	1100 0	1100 5	1100 10	1100 15	1100 20	1100 25	1100 30	1100 35	1100 40	1100 45	1100 50	1100 55	1100 60	1100 65	1100 70	1100 75	1100 80	1100 85	1100 90	1100 95	1100 100
E_u (mm)	V_u (Unbalanced Speed) in Km/hour; $V_u = V_b$ (Balanced Speed) when $E_u = 0$ (kph)																				
0	0	22	31	38	43	48	53	57	61	65	68	72	75	78	81						
5	22	31	38	43	48	53	57	61	65	68	72	75	78	81							
10	31	38	43	48	53	57	61	65	68	72	75	78	81								
15	38	43	48	53	57	61	65	68	72	75	78	81									
20	43	48	53	57	61	65	68	72	75	78	81										
25	48	53	57	61	65	68	72	75	78	81											
30	53	57	61	65	68	72	75	78	81												
35	57	61	65	68	72	75	78	81													
40	61	65	68	72	75	78	81														
45	65	68	72	75	78	81															
50	68	72	75	78	81																
55	72	75	78	81																	
60	75	78	81																		
65	78	81																			
70	81																				
75																					
80																					
85																					
90																					
95																					
100																					

Figure 4.3 (23 of 27)

Vu Versus Eu plus Ea for R1100

R (m) E_a (mm)	1200 0	1200 5	1200 10	1200 15	1200 20	1200 25	1200 30	1200 35	1200 40	1200 45	1200 50	1200 55	1200 60	1200 65	1200 70	1200 75	1200 80	1200 85	1200 90	1200 95	1200 100
E_u (mm)	V_u (Unbalanced Speed) in Km/hour; $V_u = V_b$ (Balanced Speed) when $E_u = 0$ (kph)																				
0	0	23	32	39	45	51	55	60	64	68	72	75	78	82							
5	23	32	39	45	51	55	60	64	68	72	75	78	82								
10	32	39	45	51	55	60	64	68	72	75	78	82									
15	39	45	51	55	60	64	68	72	75	78	82										
20	45	51	55	60	64	68	72	75	78	82											
25	51	55	60	64	68	72	75	78	82												
30	55	60	64	68	72	75	78	82													
35	60	64	68	72	75	78	82														
40	64	68	72	75	78	82															
45	68	72	75	78	82																
50	72	75	78	82																	
55	75	78	82																		
60	78	82																			
65	82																				
70																					
75																					
80																					
85																					
90																					
95																					
100																					

Figure 4.3 (24 of 27)

Vu Versus Eu plus Ea for R1200

R (m) E_a (mm)	1300 0	1300 5	1300 10	1300 15	1300 20	1300 25	1300 30	1300 35	1300 40	1300 45	1300 50	1300 55	1300 60	1300 65	1300 70	1300 75	1300 80	1300 85	1300 90	1300 95	1300 100
E_u (mm)	V_u (Unbalanced Speed) in Km/hour; $V_u = V_b$ (Balanced Speed) when $E_u = 0$ (kph)																				
0	0	24	33	41	47	53	58	62	67	71	74	78	82								
5	24	33	41	47	53	58	62	67	71	74	78	82									
10	33	41	47	53	58	62	67	71	74	78	82										
15	41	47	53	58	62	67	71	74	78	82											
20	47	53	58	62	67	71	74	78	82												
25	53	58	62	67	71	74	78	82													
30	58	62	67	71	74	78	82														
35	62	67	71	74	78	82															
40	67	71	74	78	82																
45	71	74	78	82																	
50	74	78	82																		
55	78	82																			
60	82																				
65																					
70																					
75																					
80																					
85																					
90																					
95																					
100																					

Figure 4.3 (25 of 27)

Vu Versus Eu plus Ea for R1300

R (m) E_a (mm)	1400 0	1400 5	1400 10	1400 15	1400 20	1400 25	1400 30	1400 35	1400 40	1400 45	1400 50	1400 55	1400 60	1400 65	1400 70	1400 75	1400 80	1400 85	1400 90	1400 95	1400 100
E_u (mm)	V_u (Unbalanced Speed) in Km/hour; $V_u = V_b$ (Balanced Speed) when $E_u = 0$ (kph)																				
0	0	24	35	42	49	55	60	65	69	73	77	81									
5	24	35	42	49	55	60	65	69	73	77	81										
10	35	42	49	55	60	65	69	73	77	81											
15	42	49	55	60	65	69	73	77	81												
20	49	55	60	65	69	73	77	81													
25	55	60	65	69	73	77	81														
30	60	65	69	73	77	81															
35	65	69	73	77	81																
40	69	73	77	81																	
45	73	77	81																		
50	77	81																			
55	81																				
60																					
65																					
70																					
75																					
80																					
85																					
90																					
95																					
100																					

Figure 4.3 (26 of 27)

Vu Versus Eu plus Ea for R1400

R (m) E_a (mm)	1500 0	1500 5	1500 10	1500 15	1500 20	1500 25	1500 30	1500 35	1500 40	1500 45	1500 50	1500 55	1500 60	1500 65	1500 70	1500 75	1500 80	1500 85	1500 90	1500 95	1500 100
E_u (mm)	V_u (Unbalanced Speed) in Km/hour; $V_u = V_b$ (Balanced Speed) when $E_u = 0$ (kph)																				
0	0	25	36	44	51	57	62	67	72	76	80										
5	25	36	44	51	57	62	67	72	76	80											
10	36	44	51	57	62	67	72	76	80												
15	44	51	57	62	67	72	76	80													
20	51	57	62	67	72	76	80														
25	57	62	67	72	76	80															
30	62	67	72	76	80																
35	67	72	76	80																	
40	72	76	80																		
45	76	80																			
50	80																				
55																					
60																					
65																					
70																					
75																					
80																					
85																					
90																					
95																					
100																					

Figure 4.3 (27 of 27)

Vu Versus Eu plus Ea for R1500

	Ea (in mm) = 11.83 V_u^2 / R - 100 for Z = 0.067g ; E_u max = 100 mm (Refer to Section 4.2.3.5)												
Speed (V_u) (Km/hr) / Radius (metres)	**20**	**25**	**30**	**35**	**40**	**45**	**50**	**55**	**60**	**65**	**70**	**75**	**80**
35	35												
40	18	85											
45	5	64											
50		48											
55		34	94										
60		23	77										
65		14	64										
70		6	52										
75			42	93									
80			33	81									
85			25	70									
90			18	61									
95			12	53	99								
100			6	45	89								
110				32	72								
120				21	58	100							
130				11	46	84							
140				4	35	71							
150					26	60	97						
160					18	50	85						
170					11	41	74						
180					5	33	64	99					
190					0	26	56	88					
200						20	48	79					
220						9	34	63	94				
240						0	23	49	77				
260							14	38	64	92			
280							6	28	52	79			
300								19	42	67	93		
325								10	31	54	78		
350								2	22	43	66	90	
375									14	33	55	77	
400									6	25	45	66	89
450										11	29	48	68
500										0	16	33	51
550											5	21	38
600												11	26
650												2	16
700													8
750													1

Note: E_a less than zero or greater than 100 mm are not l isted on the table

Figure 4.4

Superelevation Vs Radius and Unbalanced Speed

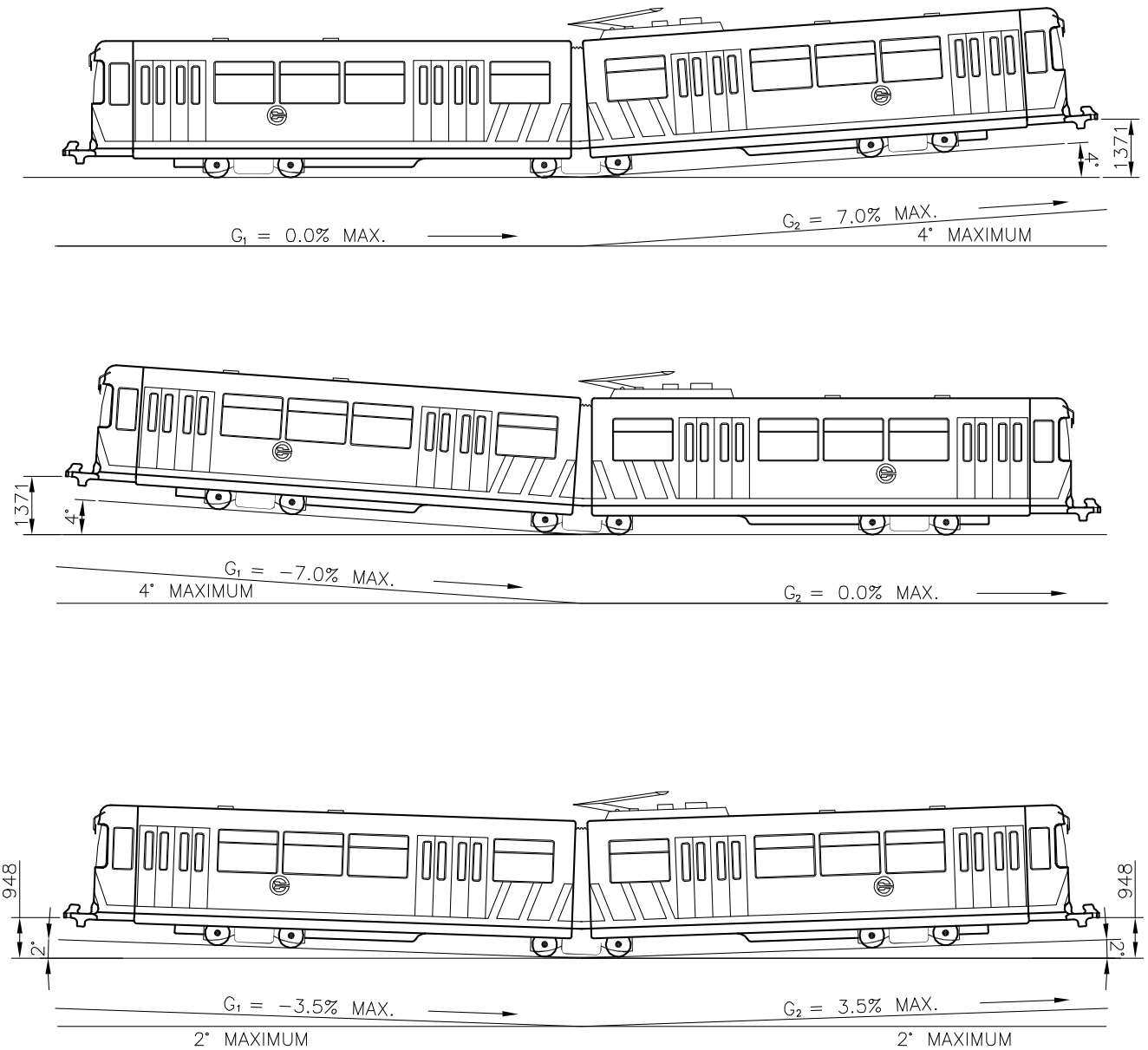

$A_{max} = (G_1 - G_2) = 7.0\%$

NOTE:

U2 AND SD160 ALLOW FOR 4°MAXIMUM ANGULAR DEFLECTION AT ARTICULATION JOIN. LINEAR DIMENSIONS SHOWN ARE FOR THE U2 LRV.

		FIGURE 4.5	CHAPTER 4
		LRV ARTICULATING JOINT LIMITS	TRACK ALIGNMENT
Date	Revision		

Track Zone	Criteria	Grade (%)	Length of Vertical Curve (m)	Tangent Length (m)
Mainline	Desirable Maximum Absolute Maximum	4.5 6.0 or 6.7 over short distances		
(1) Based on Rate of Change in Grade: **(i) V = or > 50 km/hr** Balanced Speed Unbalanced Speed	 Minimum Minimum		The greater of: 60 or *A x 25 60 or *A x 50	25
(ii) V < 50 km/hr Balanced Speed Unbalanced Speed	 Minimum Minimum		The greater of : 60 or *A x 15 or 60 or *A x 25	
(2) Based on Vertical Acceleration: **(i) Crest Curve** **(ii) Crest Curve**	 Minimum Minimum		 $0.0047AV^2$ $0.0025AV^2$	
Storage Track	Desirable Maximum	0.0 0.5		
Yard Track	Desirable Maximum	0.0 0.5		
Shop Track	Desirable	0.0		
Station Track	Desirable Maximum Desirable Minimum	1.0 0.3		 Platform Length +30 (15 m each end)
Special Trackwork	*Desirable Minimum *Minimum	** **		Turnout Limits +10 (5 m each end) Turnout Limits +6 (3 m each end)

* A is the algebraic difference in percentage grade
** Refer to Chapter 5 Trackwork, Table 5.2 for details

Figure 4.6

Summary of Vertical Alignment Standards

LRT DESIGN GUIDELINES

Chapter 5

2017 EDITION – Revisions Tracking Form

Section	Reference	Revision General Description	Issue Date
All	Various	Various units have been changed to match ISO standards (e.g. kph or km/hr have been changed to km/h)	July 2017
5.2.1	Last bullet	Added requirement for consultant to develop spare parts list.	
5.2.4	Last paragr.	Minor text change.	
5.3.3.1	2nd paragr.	Specified HDPE baseplate pad.	
5.3.3.1	4th paragr.	Added Metro Line.	
5.4.7	4th paragr.	Updated current condition of Metro Line guard rail.	
5.4.7	Last paragr	Clarified consultant responsibility for future guard rail designs.	
5.5.1.1	2nd paragr.	Preference for road crossings changed from hardwood to composite ties.	
5.6.3.6	New section	Added composite tie information.	
5.6.4	2nd paragr	Use of Dolostone in ballast prohibited.	
5.7.2	Last paragr.	Minor text change.	
5.7.7	1st paragr.	Added reference to TCRP.	
5.7.9	1st paragr.	Clarified rail lubricators used on running rails and guard rails.	
Figures	Figure revision	Fig 5.3C, Fig 5.3D, Fig 12A, Fig 5.12C	
	New figures	Fig 5.12F, Fig 5.23D	

5.0 TRACKWORK

		Page
5.0	**TRACKWORK**	**1**
5.1	INTRODUCTION	1
5.2	GENERAL STANDARDS AND SYSTEM REQUIREMENTS	1
	5.2.1 General System Requirements	1
	5.2.2 Track System Classification	1
	5.2.3 Applicable Design Standards and Governing Criteria	2
	5.2.4 5.2.4 Electrical Isolation	4
	5.2.5 Noise and Vibration Attenuation	4
5.3	TRACK STRUCTURE (INCLUDING YARD TRACK)	5
	5.3.1 General	5
	5.3.2 Rail Deflection	5
	5.3.3 At-Grade (Surface) Track	6
	5.3.4 Track in Portals and Tunnels	7
	5.3.5 Track on Aerial Structures	8
	5.3.6 Embedded Track	8
	5.3.7 Track Transitional Requirements	9
5.4	SPECIAL TRACKWORK	10
	5.4.1 General Requirements	10
	5.4.2 Turnouts	10
	5.4.3 Crossovers	12
	5.4.4 Diamonds	13
	5.4.5 Sliding Rail Joints	13
	5.4.6 Lateral Restraining Devices	14
	5.4.7 Guard Rails	14
	5.4.8 Restraining Rails	14
5.5	GRADE CROSSINGS	15
	5.5.1 Road Crossings	15
	5.5.2 Pedestrian Crossings	15
	5.5.3 Requirements	15
	5.5.4 Service Life and Maintenance	16
	5.5.5 Corrosion Protection	16
5.6	TRACK COMPONENTS	16
	5.6.1 Running Rails	16
	5.6.2 Fastening Devices	18
	5.6.3 Ties	20
	5.6.4 Ballast	23
	5.6.5 Sub-ballast	23
	5.6.6 Subgrade	23
	5.6.7 Ballast Curb	24
5.7	OTHER TRACKWORK MATERIALS (OTM)	24
	5.7.1 Switch Machines	24
	5.7.2 Switch Blowers	24
	5.7.3 Switch Point Detectors	25
	5.7.4 Hold-down Bars	25

5.7.5 Roller Plates 25
5.7.6 Switch Point Protector 25
5.7.7 Friction End Stops 25
5.7.8 Wheel Stops 26
5.7.9 Rail Lubricators 26
5.7.10 Lateral Track Bracing for Stations 26
5.7.11 Rail Anchors 26

5.8 METHODS OF JOINING RAIL 27

5.8.1 Welding Processes 27
5.8.2 Non-insulated Joints 28
5.8.3 Insulated Joints 28

5.9 TRACK CONSTRUCTION TOLERANCES 28

5.9.1 General 28

5.10 RAIL GRINDING 29

5.11 DESIGN COORDINATION 30

5.12 QUALITY ASSURANCE AND QUALITY CONTROL 30

5.13 5.13 PROJECT DOCUMENTATION 30

List of Figures

Figure 5.1 – Light Rail Vehicle Wheel Profile
Figure 5.2 – Work Train Standard A.A.R. Wheel Profile
Figure 5.3A – Typical 1:40 Canted Direct Fixation Fastener and Anchoring Assembly
Figure 5.3B – Cast-in-place Plinth
Figure 5.3C – Typical 650 mm x 1200 Precast Plinth
Figure 5.3D – Typical 820 mm x 1200 mm Precast Plinth
Figure 5.4 – Ballasted Track At-grade – Mainline and Yard (Open)
Figure 5.5 – Ballasted Track At-grade – Mainline (Confined)
Figure 5.6 – Ballasted Track At-grade – Median Running
Figure 5.7 – Ballasted Track At-grade on Concrete Slab – Mainline (Confined)
Figure 5.8 – Ballasted Track on Concrete Slab – Station Structure
Figure 5.9 – Direct Fixation on Concrete Slab – Double Box/Portal Structure
Figure 5.10 – Direct Fixation on Concrete Slab – TBM Tunnel Structure
Figure 5.11 – Direct Fixation/Ballasted Track – Aerial Structure
Figure 5.12A – Typical Embedded Mainline Track with Guard Rail
Figure 5.12B – Typical Embedded Mainline Track without Guard Rail
Figure 5.12C – Typical Embedded Track Road/Pedestrian Crossing with Guard Rail
Figure 5.12D – Typical Embedded Mainline Track with Track Drains
Figure 5.12E – Typical Embedded Shop Track
Figure 5.12F – Typical Embedded Track with Guard Rail and Anchor Bolts
Figure 5.13 – Typical Rail Beam – Pit Track
Figure 5.14 – Typical Transition Tie Layout
Figure 5.15 – Typical Transition Slab Details
Figure 5.16 – Turnout and Crossover Data for Curved Split Switches – AREMA Standard
Figure 5.17 – No. 5 Turnout UIC Standard
Figure 5.18 – No. 8 Turnout UIC Standard
Figure 5.19A – Type-1 Guard Rail Mounting Bracket for Embedded Track
Figure 5.19B – Type-2 Guard Rail Mounting Bracket for Direct Fixation
Figure 5.19C – Type-3 Guard Rail Mounting Bracket for Wood Tie
Figure 5.20A – Typical Restraining Rail Layout Plan
Figure 5.20B – Typical Restraining Guard Rail Fasteners
Figure 5.21 – Typical At-Grade Road Crossing
Figure 5.22A – Typical At-Grade Pedestrian Crossing
Figure 5.22B – Detectable Warning Surface – 2500 mm Pedestrian Crossing
Figure 5.22C – Detectable Warning Surface – 3100 mm Pedestrian Crossing
Figure 5.22D – Detectable Warning Surface – 5000 mm Pedestrian Crossing
Figure 5.23A – 100 lb ARA-A Tee Rail
Figure 5.23B – 115 lb RE Rail
Figure 5.23C – 67R1 (Ph37a) Girder Rail
Figure 5.23D – Modified UIC-33 Guard Rail
Figure 5.24 – Typical Shim Details for Direct Fixation Fastener
Figure 5.25 – Typical Wood Tie Details
Figure 5.26 – Typical Concrete Tie Details
Figure 5.27 – Typical Lateral Track Bracing Details
Figure 5.28 – Ballast Curb Typical Details
Figure 5.29 – Typical Bollard and Chain Fence
Figure 5.30 – CPG & CPF wheel Alignment
Figure 5.31 – Typical Hold-Down Bar
Figure 5.32 – Typical Switch Point Protector
Figure 5.33 – Typical Rail Anchor on Cast-in-place Plinth

5.0 TRACKWORK

5.1 INTRODUCTION

This chapter presents the general requirements, guidelines and criteria for the design of track and trackwork components for the Edmonton LRT System. These guidelines have been developed to assist the consultant to facilitate the design process. All aspects of track and related track components are discussed including rail, special trackwork, support structures, fastening devices, and related hardware.

These guidelines have evolved from AREMA (American Railway Engineering and Maintenance Association) practices. However, with the introduction of the European UIC (International Union of Railways) design standards, new design technology, and through experience, the guidelines have been modified to better suit the requirements of Edmonton's LRT System.

It is a requirement that technology used in trackwork design development be proven for a minimum of two (2) years of revenue service in a LRT system similar to Edmonton's. Compatibility with Edmonton's existing technology is also essential.

Trackwork components should generally comply with Edmonton's current trackwork standards. These guidelines will form the basis for the trackwork design and evaluation of alternative systems. Any variance from these guidelines will require approval in writing from ETS.

5.2 GENERAL STANDARDS AND SYSTEM REQUIREMENTS

5.2.1 General System Requirements

The trackwork consultant should apply a design philosophy that will provide continued acceptable performance, ease of operation and maintenance, and stresses the following principles:

- Minimal changes to the design of the existing Edmonton LRT System
- Ensuring design compatibility with existing trackwork components
- Interchangeability
- Modular design
- Use of standard off-the-shelf components
- Maintainability
- Availability and reliability
- Ability to interface with work to be done by other disciplines
- During the design, the consultant should determine a spare parts list for each component, and discuss with ETS for agreement.

5.2.2 Track System Classification

Edmonton's LRT System has four (4) classifications for its track system: Mainline track, Secondary track, and Yard and Shop track.

5.2.2.1 Definitions

Mainline track or **Primary Track** consists of track constructed for the purpose of carrying revenue passengers and should be constructed of continuous welded rail (CWR).

Secondary track consists of track constructed for the purpose of temporary storage, staging and branching off the mainline (e.g. pocket track and lead track off the mainline to the Maintenance Yard). Secondary track must be constructed to mainline track standards.

Yard track consists of tracks constructed beyond the lead track off the mainline.

Yard track does not carry revenue passengers. In general, its purpose is for routing and switching trains around the Maintenance Yard or for storing trains outside the Maintenance Facilities. Yard track should be constructed of jointed rail on tie and ballast track structure.

Embedded track consists of the track structure which is completely covered by pavement materials except for the top of rail and flangeway. The embedment materials, including the design of flangeway and rail used, are tailored to specific site circumstances, such as road crossing, pedestrian crossing and in-street track within a shared ROW.

Shop track consists of pit tracks and embedded tracks constructed within the building limits of the Maintenance Facilities. Shop track should be constructed of Continuous Welded Rail (CWR) with direct fastening system embedded in in-fill concrete or mounted directly on steel beams.

5.2.3 Applicable Design Standards and Governing Criteria

5.2.3.1 General

As a minimum, all track and trackwork should be designed in accordance with current governing codes, regulations, standards and practices as follows:

- American Railway Engineering and Maintenance Association - AREMA
- American Society for Testing and Materials - ASTM
- Canadian Standards Association - CSA
- International Union of Railways - UIC

Consideration must be given to the design vehicle size, load and performance, and horizontal and vertical vehicle dynamic clearances as noted in Chapters 2 and 3 of these Guidelines.

5.2.3.2 Design Speed and Design Wheel Load

All tracks should be designed for the maximum design operating speed dictated by the geometric and operational constraints of the section under consideration.

The maximum design speed for LRVs on mainline is 80 km/h.

The maximum design speed for Work Trains on mainline is 40 km/h.

The design speed for the LRV on yard track is 15 km/h, whereas the yard operating speed for both the LRV and the Work Train is 10 km/h. Yard test tracks may require a higher design operating speed.

The maximum design wheel load of the Design LRV is *5800 kg rounded (refer to Figure 2.3).

* 23,063 ÷ 4 = 5766 kg

The maximum design wheel load of the Work Train is *8000 kg rounded (refer to Figure 2.4).

* 32,200 ÷ 4 = 8050 kg

5.2.3.3 Minimum Track Separation and Fouling Point

Where possible, the trackwork consultant should maintain a minimum distance of 4.5 m between track centers. Fouling point restrictions based on the vehicle dynamic clearances of bi-directional train movement to all trackway elements must be taken into consideration.

5.2.3.4 Track Gauge

Edmonton's LRT System currently utilizes 100 lb ARA-A rail and 115 lb RE rail installed in accordance with the following criteria:

- Track gauge for mainline tangent track is 1435 mm +3/-1 mm, measured 16 mm below the top of railhead.
- Track gauge for curved track is 1435 mm +3/-1 mm. If necessary, gauge adjustment may be considered in sharp curves on mainline to minimize wheel binding.
- Special trackwork should be designed to the standard gauge of 1435 mm +3/-1 mm.
- No gauge widening is required in the yard and shop track.

Refer to Table 5.3 for track gauge construction tolerances.

Refer to Section 5.3.3.1 regarding the use of 115 lb RE rail.

5.2.3.5 Trackwork Lateral and Vertical Adjustability

Direct fixation fasteners and concrete ties should be designed so that adjustments can be made to newly installed trackwork as follows:

i. Direct Fixation Fastener

   Lateral track adjustments of +/- 15 mm in increments of 3 mm should be provided. A positive serrated fastening design for lateral adjustment is preferred.

   Vertical adjustment of direct fixation fasteners should be achieved by shimming. Steel shim thickness ranging from 1 mm to 20 mm should be used. Combinations of a maximum of three shims are permitted to make up a maximum shimming height of 25 mm.

ii. Concrete Cross Ties

   Provision should be made to allow minor gauge adjustment to compensate for concrete tie shoulder casting tolerances and future rail wear. Insulators of varying widths should be used to provide flexibility for gauge adjustment.

5.2.3.6 Rail Cant

Rail cant should be 1:40, unless otherwise specified.

Rail cant on mainline and yard track should be achieved by the use of canted fasteners.

Rail cant on concrete ties should be incorporated in the rail seat area as part of the tie casting requirements.

Rails in turnouts and shop track should be installed vertically with zero rail cant.

Rail expansion joints and lateral deflecting devices, where used, should have the same rail cant as the connecting rails. Refer to Section 5.4.5, for Sliding Rail Joints requirements.

5.2.3.7 Rail Cant Transition

Zero to 1:40 rail cant transitioning between turnouts and the connecting tracks should take place a minimum of 3 m ahead of the point of switch. This distance should be increased if necessary to avoid placing the cant transitioning at insulated joint locations. Insulated joints are too rigid to conform to changes in cant.

Tapered shims, elastomeric grout pads or concrete crossties with built-in variable canted rail seats should be used to accomplish the rail cant transition over a distance of 3 m, allowing the rail to twist in its natural form.

Rail cant transitioning is not required at the transition point between the yard and the shop track due to the slow train speeds in this area.

5.2.3.8 Flangeways

Flangeway dimension requirements are a function of the wheel profile (refer to Figure 5.1) and curve radius used. The wheel flange width and the back-to-back wheel flange distance determine the appropriate wheel flange clearance. The determination of an appropriate flangeway width should also take rail-mounted maintenance equipment requirements and pedestrian crossing safety standards into consideration.

The flangeway depth must be sufficient to accommodate dirt and debris without causing wheel lift.

The flangeway width through the frog and corresponding guard rail must be designed to prevent excessive lateral wheel movement at the point of wheel transfer. Excessive lateral wheel movement will result in premature wear of the wing rail and frog point.

The following are the flangeway requirements:

- Frog flangeway – 47 mm (width) x 52 mm (depth)
- Guard rail flangeway in special trackwork – 45 mm (width) x 52 mm (depth)
- Guard rail flangeway in curves – adjustable width to compensate for rail wear and operating speed x 52 mm (depth)
- Road grade crossing flangeway – 65 mm (width) x 52 mm (depth)
- Pedestrian crossing flangeway – 65 mm (width) x 52 mm (depth)

The above requirements are industry standards for the standard AAR wheel profile used on the LRT Work Train (refer to Figure 5.2).

5.2.4 Electrical Isolation

The Edmonton LRT System uses a 700 V direct current power supply. Both rails of the track are used as conductors for the traction power current return. Rail current leakage may cause corrosion of the track structure and facilities. Concerns regarding stray current must be addressed in the trackwork design.

Note: 700 V DC represents a no load traction power voltage.

All trackwork systems in direct contact with the vehicle must have provision for electrical isolation from the ground. With the exception of wood ties (refer to Section 5.6.3), the rail base that comes in contact with fasteners on concrete slab and concrete ties must be isolated electrically. Insulating requirements are presented in Chapter 13, Corrosion and Stray Current Control.

Corrosion protection should also be considered at crossings, track structures and underground utilities along the LRT right-of-way.

The grounding system should be designed and constructed based on a grounding study.

5.2.5 Noise and Vibration Attenuation

Noise along the LRT right-of-way primarily originates from the LRV wheel and rail at the point of contact. Surface roughness of both the wheel and rail at the contact point generates noise and vibration in the LRV, trackwork components, and track support structures.

Trackwork design can have a substantial effect on noise and vibration. The trackwork design and selection of trackwork components should consider the following methods for controlling and/or reducing noise and vibration adjacent to residential areas:

- Use of resilient or elastomeric bonded direct fixation fasteners

- Use of resilient rail seat pads for concrete ties
- Use of Continuous Welded Rail (CWR) on mainline
- Use of rubber rail boot or elastomeric grout for embedded track system at areas sensitive to noise and vibration impacts
- Strategically incorporating track lubricator on curved track with radius of less than 200 m
- Strategically locating turnouts to minimize the impact of noise and vibration generated from wheel transfer impact
- Use of trackwork components which incorporate noise and vibration dampening measures (e.g. ballast matting)
- Rail grinding prior to revenue service
- Use of wayside sound barriers, where appropriate

Refer to Chapter 14, Impact Mitigation, Aesthetics, ROW Control for guidelines regarding noise attenuation measures adjacent to residential and other sensitive communities.

5.3 TRACK STRUCTURE (INCLUDING YARD TRACK)

5.3.1 General

Mainline track on grade in accessible areas should be of concrete tie with Pandrol clip (or approved fastener) and ballast construction. Yard track on grade in accessible areas should be of timber tie, screw spike and ballast construction.

Track laid in areas where access is restricted (e.g. in tunnels, on aerial structures, or inside buildings) should be the direct fixation. Cementitious grout pads as direct fixation foundation must not be used. The pre-cast or cast-in-place concrete plinth upon which the direct fixation fasteners are anchored should be poured or grouted in separately after the main slab has been cast. Figure 5.3A illustrates a typical installation of direct fixation fastener on concrete plinth.

Tracks installed in major roadways, in close proximity to businesses, should consider the use of embedded structure (refer to Section 5.3.6.1).

Depending on the location optimized for the installation of special trackwork, mainline special trackwork can be installed on tie and ballasted track structure or on track slab utilizing elastomeric grout pads (refer to Section 5.4.1).

To ensure the proposed trackwork system is compatible with the existing Edmonton LRT System, other alternate track structures will not be permitted unless the advantages in terms of performance, overall cost and maintenance requirements can be proven. Any proposed alternate track structure must have a proven revenue service record of at least 2 years on a LRT system similar to Edmonton.

5.3.2 Rail Deflection

Rail deflection is a critical factor in the determination of the appropriate track structure and rail support spacing requirements.

The trackwork consultant must analyze the rail deflection to verify the fastener or tie spacing required for the selected track structure and rail section.

The amount of rail deflection is dependent on the following factors:

- Wheel load and wheel diameter
- Track modulus
    - Rail Section (moment of inertia)
    - Depth of ballast and sub-ballast
    - Subgrade strength
- Train speed

The maximum allowable rail deflection should not exceed 2 mm on mainline track structure. A deflection exceeding 2 mm may cause premature failure of track components.

5.3.2.1 Fastener Spacing

Direct fixation fasteners on concrete structures or plinths should be spaced at 750 mm. On curved track the fasteners should be installed radially from the centre of the curve.

The maximum allowable direction fixation fastener spacing for 100 lb ARA-A rail section is 800 mm. Spacing greater than 800 mm may cause excessive deflection.

Similarly, the maximum allowable direction fixation fastener spacing for 115 lb RE rail section is 800 mm. Spacing greater than 800 mm may cause excessive deflection.

Note: Refer to Section 5.3.3.1 and later sections in this chapter for guidelines pertaining to the use of 100 lb ARA-A and 115 lb RE rail.

5.3.2.2 Tie Spacing

Tie spacing is dependent on the maximum allowable rail deflection and maximum bearing pressure at the interface layers that makes up the recommended track structure.

Concrete tie spacing should be 675 mm, unless otherwise specified.

Wood tie spacing should be 560 mm, unless otherwise specified.

Should there be a change in tie spacing, the trackwork consultant must verify the rail deflection and bearing pressure exerted at the track structure interfaces. As a minimum, bearing pressures at the track structure interfaces should conform to the following AREMA recommendations:

- Concrete tie - bearing pressure at the ballast/tie interface should not exceed 585 kPa (or 85 psi)
- Wood tie – bearing pressure at the ballast/tie interface should not exceed 448 kPa (or 65 psi)
- The bearing pressure at the subgrade/sub-ballast interface should not exceed 138 kPa (or 20 psi)

Note: The above guidelines are based on AREMA's recommended maximum bearing pressure values. However, a detailed analysis of allowable bearing capacity may be necessary to determine the granular depth (ballast and sub-ballast) required for the allowable load to be transferred to the subgrade.

5.3.3 At-Grade (Surface) Track

A ballasted track structure should be used for surface mainline. Concrete ties are preferred over wood ties in ballasted track. Concrete ties hold gauge and line better providing smoother ride quality and longer service life with less maintenance requirements.

5.3.3.1 Wood Tie and Ballast Track

Wood tie and ballast track structure is generally used in the yard and should be installed as shown in Figure 5.4.

The rail fastening system should consist of a base-plate complete with HDPE baseplate pad, spring clips, screw spikes and spring lock washers.

100 lb ARA-A CWR (refer to Figure 5.23A) is installed on wood tie and ballast for mainline surface track between Clareview and Health Sciences Stations. 100 lb ARA-A jointed rail is installed at the D.L.MacDonald Transit Yards.

115 lb RE CWR (refer to Figure 5.23B) is installed on concrete tie and ballasted tracks for the South LRT Extension from Health Sciences to Century Park Stations, and on concrete plinths

as well as embedded for the Metro Line LRT Extension from just north of Churchill to NAIT Station.

To be consistent with Edmonton LRT trackwork system, all future LRT mainline extensions should be constructed of 115 lb. RE rail section.

Wood ties should be spaced at 560 mm centre to centre. Closer tie spacing may be warranted on curves with radius less than 300 m if deem necessary through track structure analysis.

5.3.3.2 Concrete Ties and Ballast on Subgrade

Concrete tie and ballast track structure on compacted subgrade, as shown in Figures 5.5 and 5.6, is the preferred option for track constructed at grade.

The rail fastening system for precast concrete ties should consist of cast-in-place cast iron shoulders, spring clips, rail pads and insulators for the fastening of 115 lb RE rail section. Refer to Section 5.6.1, Running Rail and Section 5.6.3.4, Concrete Cross Ties for details.

Concrete ties should be spaced at 675 mm centre to centre. Closer tie spacing may be warranted on curves with radius less than 300 m if deemed necessary through track structure analysis.

5.3.3.3 Concrete Ties and Ballast on Concrete Slab

Concrete tie and ballast track structure on concrete slab, as shown in Figures 5.7 and 5.8, should be used in areas where there are depth restrictions preventing construction of a full granular trackbed.

Minimum ballast depth under the tie is 225 mm.

At isolated locations where there are depth restrictions, the absolute minimum ballast depth under the tie is 175 mm. Ballast depth of less than 175 mm will not allow the ballast to be machine tamped effectively.

5.3.4 Track in Portals and Tunnels

5.3.4.1 Direct Fixation on Concrete Slab

Direct fixation track on concrete slab as shown in Figure 5.9 should be used in portal transition sections.

Direct fixation track on concrete slab as shown in Figure 5.10 should be used in tunnels.

Typically it is specified that the tunnel contractor or the installer of the base slab make provision for concrete plinths by providing recesses in the concrete tunnel invert. The concrete plinth should be connected to the invert concrete with a series of stirrups or by rebars connecting to threaded inserts. The concrete plinth system can be designed as cast-in-place or pre-cast system. The trackwork consultant should evaluate the two options based on the economies of scale, constructability, quality and maintainability of the end product.

The top of concrete plinth should be level with the 1:40 inward rail cant being incorporated in the direct fixation fastener.

Inserts for the direct fixation fastener connections should be cast in the concrete plinth. Epoxy coated inserts are preferred over cast-in-place anchor bolts for maintainability.

Direct fixation fasteners are connected to the concrete plinth with anchor bolts to match the cast-in-place inserts. Running rails should be fastened to the direct fixation fasteners with the use of spring clips. Refer to Section 5.3.2.1 for direct fixation fastener spacing and Section 5.6.1 Running Rail, for details.

5.3.4.2 Other

Ballasted track structure on concrete slab can be installed in tunnel sections. This option must be reviewed and approved by ETS. If necessary, vertical barriers should be provided to retain the ballast in place.

5.3.5 Track on Aerial Structures

5.3.5.1 Direct Fixation on Concrete Slab

Direct fixation track on concrete slab as described in Section 5.3.4.1 is the preferred track structure for aerial structures. This track structure for aerial structures is shown in Figure 5.11.

Restraining rails must be installed in the gauge side of both rails for the purpose of restricting the travel distance of a derailed vehicle.

5.3.5.2 Other

Ballasted track on concrete slab may be considered for installation on aerial structures, provided maintenance and safety concerns are satisfactorily addressed.

5.3.6 Embedded Track

5.3.6.1 Embedded Mainline Track

Embedded mainline track in an urban setting environment integrated with road traffic on a shared ROW should be constructed of resilient rubber rail boot or elastomeric grout for mitigating potential stray current leakage and attenuating noise and vibration impacts. Pre-cast concrete in-street ties or composite ties can be used to secure the track gauge and elevation, and form an integral part of embedded track structure. The 115 lb. RE “Tee” rail is the preferred rail section to be used throughout any embedded mainline track section rather than the use of girder rail. Girder rail is more expensive and not readily available in North America, and snow removal in a narrow grooved flangeway has proven to be a major undertaking for other systems with severe winter condition. Typical embedded mainline track structures with and without guard rail system are shown in Figures 5.12A and 5.12B.

The installation of embedded mainline track using elastomeric grout as an alternative option will require the forming of channels in the concrete slab to accommodate the running rails. The trackwork consultant should evaluate the appropriate embedded track options for review by ETS.

Embedded mainline track at-grade should have provisions of trackway cross drains at the limits of each road crossing and/or at intermediate track intervals of no greater than 50 m. Drainage should be designed for every recess (i.e. switches, switch machines, lubricators etc.). The trackwork consultant should work in conjunction with the trackway drainage consultant to determine the drainage requirements for the embedded mainline track. Refer to Figure 5.12D for typical cross drain details.

5.3.6.2 Embedded Shop Track

Embedded tracks are constructed in maintenance facilities for the purpose of allowing maintenance equipment access across the shop floor. A typical embedded shop track structure is shown in Figure 5.12E.

Rail fasteners for embedded shop track should be non-resilient and spaced at 1.5 m on centre. Rails should be laid as CWR. The fastening system must be designed to secure rails at the proper gauge, line and elevation once rails are embedded in concrete.

Gauge rods are normally used to maintain track gauge and form an integral part of the anchoring system. Vertical adjustments should be made by shimming. Gauge rods used in signalized territory must be electrically isolated.

Embedded shop tracks should be in-filled with grout or concrete. The field side in-fill grout or concrete elevation should be set 10 mm below the top of running rail to avoid false flanging. The minimum flangeway width for embedded tracks in maintenance facilities is 65 mm to accommodate AAR wheels as used on the track maintenance equipment.

5.3.6.3 Pit Tracks

Pit tracks are required for maintenance purposes. They provide access for maintenance personnel to inspect and maintain equipment installed in the undercarriage of the LRV.

The current pit track system used by ETS is comprised of rails directly fastened to the top of steel "I" beams. Removable plates are installed on the field sides of pit tracks to allow access to the undercarriage of LRVs from the side. The typical pit track structure is shown in Figure 5.13.

5.3.7 Track Transitional Requirements

The interface points between embedded and ballasted tracks (e.g. at maintenance facilities) or between direct fixation and ballasted tracks are locations where typically there is a sudden change in track modulus. These locations are generally exposed to differential settlement. The more flexible ballasted track normally will settle causing structural damage to occur at the stiffer section. The resulting degradation in the track quality leads to deterioration of the track components and may compromise ride quality. Special design measures are required at these locations to counteract the variation in track modulus*.

***Note:** Track modulus (u) is defined as the vehicle load per unit length of rail required to deflect the rail one unit. It is the measure of track support stiffness by combining rail section, rail support system, ballast, sub-ballast and subgrade stiffness in one term. The following values of track modulus are typical (published) ranges for good quality track:

Track Structure	Typical Track Modulus (u)
Conventional Wood Tie & Ballast	21 N/mm² (3,000 lb/in²) or greater
Concrete Tie & Ballast	48 – 55 N/mm² (7,000 – 8,000 lb/in²)
Direct Fixation	69 N/mm² (10,000 lb/in²) or greater

In general, the method of track transitioning must be considered wherever there is an abrupt change in track modulus.

The minimum length of track transition structure depends on the track structure design and the physical constraints at the interface points. The track transition should be over a minimum of 3 ties.

5.3.7.1 Transition Ties

Transition ties are typically used at approaches to bridge structures and at wood to concrete tie interfaces. Transition ties are of varying lengths. To provide a gradual change in load distribution under the ties, the longer ties are placed near the stiffer end of the track structure as shown in Figure 5.14.

5.3.7.2 Transition Slab

A transition slab (vs. transition ties) is the preferred option for transferring track stiffness from direct fixation to tie and ballast. This option is shown in Figure 5.15.

Designed concrete slabs may also be installed at other track support structure interfaces where space restrictions do not allow transition ties to be used.

5.4 SPECIAL TRACKWORK

Special Trackwork is defined as trackwork structures, trackwork components or fittings that are normally fabricated in whole, or in part, from regular rolled rail section. In general, the following components are included in special trackwork:

- Turnouts and crossovers
- Diamonds
- Guard rails
- Expansion or sliding rail joints
- Lateral restraining devices required at structural interface elements

5.4.1 General Requirements

All special trackwork should be located on tangent track and constant profile grade. Special trackwork located on curves require unique customized design and are difficult to fabricate and maintain. Fabrication and on-site installation variables associated with special trackwork in curves may also compromise operating safety of the system.

On ballasted track, special trackwork should be placed on concrete ties.

On concrete slab track, special trackwork should be incorporated on a direct fixation system using elastomeric grout pads.

In maintenance facilities, switches on the shop floor should be of the in-street type of special trackwork and should be installed as an embedded track system to allow access by maintenance equipment and personnel. A minimum tangent length of 17 m should be inserted between back to back switch points where the turnout arrangement entails a possible reverse movement through turnouts. This is to ensure excessive stress is not exerted on the LRV couplers.

A minimum tangent length of 5 m should be inserted between back to back switch points where the turnout movement is in the same direction. This will provide the opportunity for the LRV bogies to straighten out prior to entering into the next turnout minimizing the angle of attack of the wheel flange on the curved switch point.

When designing turnouts the following restrictions should be taken into account:

- Diverging track should not be used for normal mainline routing except for switching at the end of the line.
- Vehicle dynamic clearances and turnout fouling points must be considered when determining turnout locations.
- Turnouts should not be located within 15 m from the end of the station platform. This is to ensure that the inswing and outswing effect of the dynamic vehicle do not interfere with the station platform.
- Turnouts must not be located on vertical curves. Turnout components are too rigid to conform to vertical curves. In addition, the tight tolerances associated with non-standard trackwork components could compromise operating safety and lead to derailments.
- Turnouts must not be located in superelevated track areas. Superelevation will introduce a twist in the turnout and could create a situation of overbalance or underbalance track conditions (refer to Chapter 4, Track Alignment, Section 4.2.3.5).

5.4.2 Turnouts

5.4.2.1 General Requirements

The following table presents the maximum allowable speeds through turnouts under AREMA and UIC guidelines.

Turnout No.	Location	AREMA*	UIC**
No. 5	Yards and service areas (Figure 5.18 and 5.20) On Mainline track where space restrictions are imposed by track geometry. Slow order must be imposed at 15 km/h maximum.	15 km/h maximum (based on E_u = 65 mm)	23 km/h maximum (based on E_u = 100 mm)
No. 6	Mainline track where space restrictions are imposed by track geometry	20 km/h maximum	28 km/h maximum
No. 8	Mainline track where high speeds are not required through the turnout (Figure 5.19 and 5.20)	25 km/h maximum	36 km/h maximum
No. 12	Mainline track where intermediate speeds through the turnout are required (Figure 5.20)	38 km/h maximum	50 km/h maximum

Table 5.1 Maximum Allowable Speeds Through Turnouts

* For standard North American turnouts based on a maximum allowable unbalanced superelevation of 65 mm. A reduction in E_u (from the standard 100 mm) is utilized for standard North American turnouts to offset the lateral impact at switch entry.

** For tangential geometry turnouts based on a maximum allowable unbalanced superelevation of 100 mm.

Turnouts on tie and ballast must be adequately drained. Drainage blankets should be installed under the trackwork. Buried perforated drainage pipe should be installed running parallel to the track.

5.4.2.2 Turnout Geometry

Turnout geometry is influenced by the design of switch points and heel spread. Because the turnout curves for standard AREMA turnouts do not incorporate true tangential geometry, switch entry angles for these turnouts typically range from 1 to 3 degrees (refer to Figure 5.16).

To minimize the impact created by the wheel flange on the switch points, UIC and other European Standards have placed an emphasis on reducing switch entry angles to almost zero. Special rolled rail sections are used for switches to allow sufficient undercutting in order for the switch points to be fitted tangentially to the stock rails at the turnout entry points. Tangential turnout geometry enables longer lead distances and larger turnout radii to be achieved. This reduces the wheel impact on the curved switch point and the overall maintenance requirements for switches. For future LRT Extensions, UIC is the preferred design standard for tangential turnouts as illustrated in Figures 5.17 and 5.18.

The minimum turnout curve radius for any turnout installed as part of mainline operation must not be less than be 50 m.

For cost reasons, standard North American turnouts are the preferred turnout design for yard track.

5.4.2.3 Turnout Location

In general, it is a good practice to locate turnouts on tangent track with 0% grade and without vertical curvature. Vertical grade introduces a superelevated track condition for diverging train movement running uphill and an undesirable under-balanced track condition for the diverging train movement running downhill and should be avoided. For a No. 8 turnout curve on a 3% grade, there is an elevation difference of 5.6 mm between the frog point and the running rail.

With the diverging train movement running downhill in an under-balanced condition, the wheel set tends to shift toward the frog point and/or ride against the guard rail. Locating the turnout on slope greater than 3% with diverging train movement running downhill is not acceptable unless the travel speeds are reduced to ensure safe operating conditions across the frog.

If it is necessary to locate a turnout on a vertical grade, the trackwork consultant should determine the acceptable cross-level difference induced by the vertical grade on the turnout curve. The assessment should be based on the type of track structure, the special trackwork configuration and turnout size. Turnouts on direct fixation systems are installed with tighter tolerances and will be subject to less differential track movement. The difference in elevation across the frog and running rail through the turnout will have less impact on turnouts installed on direct fixation systems.

The criteria as shown in the following Table 5.2 are based on the acceptable elevation differences across the frog and running rail through the turnout, the type of track structure and the special trackwork configuration. These criteria must be observed when locating turnouts on grades.

CLASSIFICATION	DIRECT FIXATION	BALLASTED TRACK	REMARKS
MAINLINE			Speed restrictions are required if grades exceed these limits.
Turnout			
With diverging track running uphill	Desirable Maximum 2.0% Absolute Maximum 3.0%	Desirable Maximum 1.5% Absolute Maximum 2.5%	
With diverging track running downhill	Absolute Maximum 2.0%	Absolute Maximum 1.5%	
Crossover	Desirable Maximum 1.0% Absolute Maximum 1.5%	Desirable Maximum 0.5% Absolute Maximum 1.0%	
Double Crossover	Absolute Maximum 0.5%	Absolute Maximum 0.3%	
YARD			
Turnout	Not applicable	Desirable Maximum 2.0%	
Crossover	Not applicable	Desirable Maximum 0.5%	

Table 5.2 Criteria for Locating Turnout on Grade

Note: Any deviation from the recommended values as shown in the above table must be approved by ETS.

5.4.3 Crossovers

Crossovers are used to diverge or switch train movements from one track to another.

Single crossovers are made up of two turnouts, typically of the same size to avoid introducing a curve between the two turnouts.

Double crossovers (sometimes referred to as a scissors crossover) are required when there are space restrictions. They are comprised of four turnouts (typically of the same size), and a diamond.

Unless there are space restrictions or restrictions in track geometry, the use of two single crossovers are preferred rather than a double crossover. Diamonds require high maintenance. Also, the use of double crossover limits operational flexibility during maintenance.

5.4.3.1 General Requirements

General requirements for crossovers are similar to those listed for turnouts (Section 5.4.2). However, greater restrictions are imposed on crossovers by the more rigid geometry and track separation layouts.

The dimensional data for crossovers located on vertical grades greater than 1% should be adjusted for construction layout purposes to account for the error introduced when laying out the crossover (on a grade) in accordance with the coordinate system (on a level plan). This is to ensure that the crossover geometry and trackwork components will not be compromised by a forced fit during the course of installation (refer to Table 5.2).

5.4.4 Diamonds

Diamonds allow tracks to cross each other. A diamond consists of four wheel transferring points (or frog points). Diamonds are expensive to construct and require a high level of maintenance. They should be avoided, if possible. If absolutely necessary, the general requirements are:

- The preferred option is to locate the double crossover diamond on tangent parallel track to avoid a customized design. The trackwork consultant should also consider the proximity of track separation in order to avoid an unsafe operating condition of having the LRV wheels crossing the unrestrained frog gaps of the diamond and turnout at the same time.
- Double crossover diamonds may be located on horizontal curves. They will however be higher in cost, require more frequent maintenance and will affect ride quality.
- A diamond located on a curve should be curved (i.e. curved diamond) to closely match the radius of the intersected design track. The intent is to avoid the introduction of short broken back curves and minimize the impact on ride quality (refer to Chapter 4, Track Alignment Section 4.2.2.2 Tangent Length between Curves in the same direction).
- Curved diamonds should be designed to be fully guarded to maintain a safe operating condition during wheel transfer over a series of unrestrained frog gaps of a diamond.
- The existing ETS design standard is to use rigid frogs in turnouts and diamonds. The wheel transfer gaps for rigid frogs should be as small as possible to minimize wheel impact.
- The maximum crossing angle of diamonds on mainline should be equivalent to twice the No. 8 turnout angle.
- The maximum crossing angle of diamonds in yard track should be equivalent to twice the No. 5 turnout angle.

5.4.5 Sliding Rail Joints

Sliding rail joints must be provided where excessive structural joint movement is anticipated. This requirement is to ensure that sufficient movement of the running rails can be accommodated to prevent the rail from buckling or pulling apart when structural expansion and contraction occurs. Sliding rail joints are normally a requirement at bridge abutments on long single span bridges.

In general, sliding rail joints are installed as a set at each specified location. The orientation of the fixed stock rails and the sliding points are both structure and site specific. Sliding rail joints

are typically placed at the transition from the bridge abutment to the moveable bridge deck. Sliding rail joint requirements should be determined jointly by the trackwork and structural consultant.

Sliding rail joints are typically fabricated from the same the rail section as the running rail. For constructability purposes, the sliding rail joint baseplates should incorporate the same rail cant as the connecting track.

5.4.6 Lateral Restraining Devices

Lateral restraining devices must be installed at structural interfaces (typically in conjunction with sliding rail joints) where track movement is not parallel to the fixed structure.

Rails should be secured against lateral movement at movable structural joints where the direction of rail expansion and joint movement are not parallel (e.g. at bridge abutments where the track is in a curve).

The requirement for lateral restraining devices at the structural interface must be determined jointly by the trackwork designer and structural designer.

5.4.7 Guard Rails

Guard rails should be installed for all horizontal curves of radius less than 200 m. Guard rails are installed on the gauge side of the low rail to hold the wheel flange away from the gauge corner of the high rail and prevent excessive wear or derailment.

The guard rail should be tapered to guide the wheel flange in and out of the flangeway at the beginning and the end of the guard rail. The flangeway gap between the running and guard rails should be adjustable (refer to Section 5.2.3.8).

Guard rails can be fabricated from the running rail section or other rail sections. Guard rails should not be bolted directly to the running rail. They should be designed to be directly fastened to the concrete track slab or crossties.

It is preferable that guard rails be designed in such a manner that either the guard rail or running rail can be removed independently without removing the other for maintenance purposes. Refer to Figures 5.19A, 5.19B and 5.19C for the guard rail design option originally used on the Metro Line. Note that the brackets shown in these figures have been abandoned in embedded track sections, but remain in place. Figure 5.12F shows the modified Metro Line guard rail installation detail.

Structural testing and further investigations should be conducted on innovative guard rail designs which are not used elsewhere in the industry.

5.4.8 Restraining Rails

Restraining rails are used to prevent a derailed train from striking other fixed structures or from entering into a danger zone.

Restraining rails must be installed on the gauge side of both running rails on aerial guideways and bridge structures. Restraining rails may be required at the approaches to abutments and portals in some circumstances. Circumstances may include, but are not limited to proximity of special trackwork, sliding rail joints, horizontal curvature, or the existence of unstable ground conditions.

Restraining rails can be fabricated using part-worn rail. On direct fixation track restraining rails can be directly fastened to the concrete slab or bridge deck. The centre of the restraining rail should be located 300 mm from centre of the running rail. A typical restraining rail layout is shown in Figure 5.20A. The fastening details are shown in Figure 5.20B.

5.5 GRADE CROSSINGS

5.5.1 Road Crossings

5.5.1.1 At-grade Road Crossings on Tangent Track

At-grade road crossings should be constructed on a well compacted granular fill to provide adequate support to withstand both high vehicular traffic volumes and heavy vehicular wheel loads.

Pre-cast concrete planks with rubber rail seals on hardwood composite ties is the preferred option. This option is best suited for mitigating the potential for stray currents at road crossings. Refer to Corrosion Protection Study, 2005 by Corrpro Canada Inc.

In extremely high traffic volume locations, other grade crossing designs with proven performance records may be considered.

A typical at-grade road crossing design is shown in Figure 5.21.

5.5.1.2 At-grade Road Crossings on Curved Track

At-grade road crossings on curved track with radius less than 150 m should be constructed with embedded mainline track structure.

Refer to Sections 5.3.6.1 for embedded mainline track requirement; 5.4.7 for guard rail requirement and; 5.7.8 for track lubricator requirement on curved track.

5.5.2 Pedestrian Crossings

Future LRT extensions will be located in close proximity to residential areas and will operate on a shared ROW with multi-use trails. Future LRT extensions will therefore require channelized pedestrian crossings for pedestrians to cross the tracks at designated locations to avoid potential pedestrian-LRT conflicts.

The trackbed preparation for pedestrian grade crossings is similar to the at-grade road crossing design. However, as pedestrian crossings are designed solely for non-motorized traffic, they are not normally subjected to traffic impact and vibration. Use of a precast crossing panel design is preferred. Cast-in-place crossing panels are an acceptable alternative but where cast-in-place crossing panels are selected, use of wood ties is not acceptable.

Figure 5.22A shows a plan view of a typical at-grade pedestrian crossing along with details showing the concrete tie section and the wood tie section.

5.5.3 Requirements

The specific requirements for both types of grade crossings are:

- Match the general approach grade and preferably be slightly higher than the approach to promote a positive drainage away from the grade crossing area. The approaches should be ramped up to match the grade crossing.
- Intersect the road at as close to a right angle as possible to minimize road vehicular vibration caused by staggered wheel impact, and to maximize sight lines for the LRV operator, pedestrians and road traffic.
- Be level and parallel to the plane of the rails, extending a minimum of 1 m from the field side of the track(s).
- Be located clear of turnouts and right-of-way equipment.
- Grade crossings must be adequately drained. Normally, buried perforated drainage pipe running underneath the road crossing parallel to the LRT track connecting to either the drainage system or stand-alone reservoirs is required. In addition, geotextile should be

provided under grade crossings to direct water towards the sub-drains and prevent migration of fine materials upward to the ballast layer.

In addition, the following factors should be considered in the design:

- Rail joints should be kept clear of the crossing.
- Multiple crossings should have the same grade across all rails.
- Rubber or other approved flangeways must fit snug and not allow dirt and debris to pass through to the fastening system.
- Where necessary to locate the grade crossing in a curve, track superelevation should be avoided, if possible, in order to provide a smooth crossing for both vehicular and pedestrian traffic.
- The flangeway must accommodate the wheels of the LRV and other rail-mounted equipment (refer to Section 5.2.3.8).
- Incorporate a rubber rail boot for embedded at-grade road crossings to mitigate potential stray currents.

5.5.4 Service Life and Maintenance

The design service life should be a minimum of 25 years. There is a high maintenance cost associated with grade crossing rehabilitation and rehabilitation work normally requires a total closure of the roadway.

Ease of maintenance is an important consideration when designing grade crossings in order to minimize the disruption to road traffic during maintenance.

The grade crossing panel design should be modular and interchangeable for ease of maintenance and to minimize closure times of the roadway and LRT track.

Embedded at-grade road crossings on sharp curves should be designed with sacrificial guard rails to reduce the wear on the outside rail. Guard rails should be installed independent of the running rail for the ease of change out without disturbing the running rail. Running rail should be accessible on both the gauge and field sides of the rail.

5.5.5 Corrosion Protection

A boot or shield covering the fastening components should be incorporated in the flangeway design on both the gauge and field side of the rail to protect the fasteners from salt and dirt. Grade crossings are often subject to higher than normal corrosion rates reducing the service life of the crossings.

Grounding at the vicinity of the grade crossing should be considered to mitigate corrosion caused by current leakage.

5.6 TRACK COMPONENTS

5.6.1 Running Rails

Standard control-cooled carbon steel rails with minimum 300 Brinell Hardness, manufactured in accordance with current AREMA Manual for Railway Engineering, Chapter 4 “Specification for Steel Rails”, should be the standard used for running rails.

5.6.1.1 Rails for Mainline Track

Running rail for mainline track, including embedded mainline track, should be rolled 115 lb RE (57.2 kg/m) rail (refer to Figure 5.23B).

Running rails on mainline should be CWR to:

- Minimize long term maintenance

- Provide better ride quality
- Reduce rail and wheel wear
- Reduce noise and vibration

If a flash butt welding process is used to form rail strings, the maximum practical rail string length is 480 m.

CWR must be properly distressed and laid in accordance with the optimum neutral rail temperature of 18°C to 22°C to reduce the possibility of sun kinks or cold weather rail breaks. CWR should be laid as close to the optimum neutral rail temperature in order to minimize the distressing requirement.

In tunnel sections, the optimum neutral rail temperature may differ and should be verified by reviewing historical temperature records or by monitoring the rail temperature inside the tunnel.

Any change to the optimum neutral rail temperature for installation requires review and approval by ETS.

All running rail should be non-drilled in nominal standard 23.8 m (78 foot) lengths in order to minimize the number of welds required. Exceptions may be considered if physical constraints restrict the length of rail that can be transported to the site.

Rail to be used in curves having a track centreline radius of less than 150 m should be pre-curved to match the track centreline radius using an industry accepted hydraulic press method or the standard roller bending method.

It is generally not necessary to use premium (hardened) rail in tight curves to prevent premature rail wear. Standard carbon steel rails have a Brinell Hardness ranging from 300 to 320. This provides sufficient wear resistance under most conditions. Running rails with Brinell Hardness greater than 340 may cause premature wheel wear.

5.6.1.2 Rail for Special Trackwork

Rail used for the manufacture of special trackwork on mainline should be rolled 115 lb RE (57.2 kg/m) rail or approved Grade 900A carbon steel manufactured in accordance with the UIC 860-0 Specification.

For welding purposes, UIC rail, if used in the manufacture of special trackwork, should have a rail cross section and metallurgy closely matched to the 115 lb RE section used on the Edmonton LRT System. To minimize the number of transition welds for connecting the special trackwork to mainline, the use of 115 lb RE rail section is the preferred option for the fabrication of all special trackwork components.

Girder rail used in the manufactured of in-street special trackwork for shop track should have a flangeway width to accommodate both the LRV wheel and work train standard A.A.R. wheel.

In areas where there are high impact loads, rail should be hardened to a range of 320 to 340 Brinell Hardness, to a minimum penetration depth 15 mm below the rail surface.

Asymmetrical rail sections are acceptable for the fabrication of switch points.

Any proposed alternate rail section and its metallurgy require review and approval by ETS.

5.6.1.3 Secondary Track/Yard Track/Shop Track

Rail for secondary track should be 115 lb RE (57.2 kg/m) CWR rail.

Rail for yard track should be 100 lb ARA-A (49.8 kg/m) or 115 lb RE (57.2 kg/m) CWR or bolted rail.

Rail for shop track should be 100 lb ARA-A (49.8 kg/m) or 115 lb RE (57.2 kg/m) CWR or 67R1 (Ph37a) girder rail (refer to Figure 5.23C) which has been used in ROW Building at D.L. MacDonald Maintenance Facility.

5.6.2 Fastening Devices

Rail fastening devices vary with the type of track structure provided.

5.6.2.1 Direct Fixation Fasteners

Elastomeric bonded plate type fasteners should be used for direct fixation track.

The plate type fastener should meet the following requirements:

- Incorporation of a built-in 1:40 inward cant
- Overall plate thickness of not more than 40 mm, nor less than 35 mm
- Overall plate width of 180 mm +/- 10 mm
- Overall plate length of 355 mm +/- 10 mm
- Ability to provide lateral rail adjustments of +/- 15 mm in increments of 3 mm
- Ability to provide vertical rail adjustment to a maximum of 25 mm achieved through insertion of steel shims under the plate
- Vertical spring stiffness of the fastener shall be within the range 17.5 kN/mm to 24.5 kN/mm
- Ability to isolate electrical current from the running rail

Direct fixation fasteners should be chosen on the basis of the following criteria:

- Ability to withstand the rail/structure interface forces
- Ability to achieve and maintain the desired rail tolerances
- Ability to prevent rail buckling under high temperatures
- Ability to permit the rail to move longitudinally due to structural flexure or thermal expansion
- Ability to withstand wear and fatigue
- Ability to reduce noise and vibration to an acceptable level
- Ability to withstand local environmental conditions without the need to replace components
- Low maintenance requirements

5.6.2.2 Standard Baseplates

Standard steel baseplates are used for:

- Rail fixation on wood tie
- Special trackwork where special baseplates are not required
- Cant transition areas

Standard baseplates should be manufactured from rolled steel plate and should have shoulders to provide rail seating for 115 lb RE rail. They should have a minimum of four holes with diameter of 25 mm to accommodate anchor bolts or screw spikes.

Non-standard baseplates may be designed by special trackwork suppliers to fit the rail base of other rail sections.

5.6.2.3 Anchoring Assemblies

The anchoring assemblies connect the direct fixation fastener to the reinforced concrete structure. The objective is to design a system that is cost effective and minimizes long term maintenance.

A minimum of two anchoring assemblies is required per fastener. Each anchoring assembly consists of a female insert, an anchor bolt complete with a flat washer and a spring washer.

The anchor bolt must be designed to remain in tension at all times to ensure the bolt will not be loosened or be placed in bending under service conditions.

The design of the anchoring assembly should consider the following:

- Adequate concrete embedment depth for the female insert is required to resist pull-out caused through the anchor bolt tensile forces or rail force moments.
- The anti-rotation capability of the female insert must be sufficient to restrain the design bolt torque.
- The tensile strength of the anchor bolt must be adequate to apply the proper clamping force required to provide resistance against the rail overturning moment.

i. Inserts

Female inserts as shown in Figure 5.3A are cast directly into the concrete base slab as the hold-down connection for the mating anchor bolts. The insert should be designed and installed to match the bearing surface of the plinth.

Inserts should be epoxy coated.

Typical insert parameters are as follows:

- Overall block out depth for insert embedment should not be more than 140 mm, nor less than 130 mm.
- Overall insert length of 105 mm +/- 5 mm
- Minimum depth of threads of 75 mm +/- 1-5 mm
- The Inserts should be designed to accommodate A325, M22 anchor bolts (see 5.6.2.3.2)
- The ultimate tensile strength of the insert should be equal to or exceed the ultimate tensile strength of the mating anchor bolt

ii. Anchor Bolts

The primary function of the anchor bolts is to provide lateral restraint against loading. Anchor bolts are also subject to a small amount of upward rail force.

Anchor bolts should meet the following criteria:

- ASTM designation A325, Specification for High Strength Bolts for Structural Joints and should have a class 2 thread fit
- Nominal diameter of 22 mm
- A minimum thread engagement of 50 mm with the insert

The overall anchor bolt length is dependent on the thickness of the fastener and washer assemblies, and the maximum permissible fastener shimming height. The trackwork consultant should verify the optimal overall anchor bolt length required for the fastening assemblies. It may be necessary to use two different lengths of anchor bolts to account for the allowable shimming height:

- Standard length to accommodate shimming heights of up to 12 mm
- Longer length to accommodate shimming heights from 12 mm to 25 mm

iii. Washer Assembly

The washer assembly consists of a flat washer and a spring washer. The flat washer is design to sit flat against the fastener to provide a full bearing surface for the spring washer and anchor bolt.

The spring washer should be designed to keep the anchor bolt in tension at all times. The washer spring rate should be between 1.05 kN/mm and 1.23 kN/mm.

5.6.2.4 Spring Clips

Spring clips are an integral part of the rail fixation system for both direct fixation and ballasted track structures.

The spring clip should have the following characteristics:

- Ability to hold gauge
- Ability to resist rail rollover
- Ability to resist longitudinal rail moment
- Elastic resiliency
- Appropriate toe load
- Electrical isolation
- Reasonable service life under all operating conditions and environmental exposure
- Relatively maintenance-free
- Compatible with the existing components

Bolted type clips require high maintenance (subject to loosening and fatigue failure due to vibration) and therefore should not be considered as a suitable option except for special trackwork installations where they may be necessary.

5.6.2.4 Screw Spikes

Screw spikes complete with lock washers should be used to fasten the baseplates on wood ties. Screw spikes should be 22 mm x 175 mm.

To avoid splitting, wood ties must be predrilled to accept screw spikes.

5.6.2.5 Steel Shims

Steel shims are used as required on direct fixation track to raise the rail to its design vertical alignment. Shims are typically produced in 1 mm, 3 mm, 6 mm, 10 mm and 20 mm thickness.

Steel shims of 1 mm (20 gauge) and 3 mm (11 gauge) thickness should be manufactured from galvanized steel, coating designation G60 (458 g/m2), in accordance with the requirement of ASTM A527-80.

Steel shims of 6 mm, 10 mm and 20 mm thickness should be manufactured from hot-rolled plate steel in accordance with the requirement of CSA G40.21M, Grade 260.

The thickness requirements are inclusive of galvanizing. Steel shims should be hot dip galvanized in accordance with the latest edition of CSA G164-M, “Hot Dip Galvanizing of Irregularly Shaped Articles”. Galvanizing should be applied to a minimum 610 g/m² coating on both sides after manufacture.

The shape, size and configuration of the steel shims should conform to the outline of the direct fixation rail fasteners (refer to Figure 5.24 shows the shim size that fits the latest L.B. Foster D.F. Fastener used in the system).

5.6.3 Ties

The classification of ties used in the Edmonton LRT System is as follows:

5.6.3.1 Wood Crossties

Wood crossties used on mainline and in yard track should be pressured treated softwood, preferably fir, conforming to AREMA recommendations (refer to Figure 5.25). In areas where

maintenance access is restricted and it is difficult to replace ties, hardwood ties should be considered, preferably oak.

All wood crossties should be pressured treated in accordance with AREMA Manual for Railway Engineering, Chapter 30, for Ties and Wood Preservation.

The standard nominal dimensions for wood crossties are:

Depth – 180 mm (7”)
Width – 230 mm (9”)
Length – 2600 mm (8’-6”)

Anti-splitting devices should be installed at the tie ends on all hardwood ties. Anti-splitting devices should conform to AREMA requirements.

Current track design generally includes protection against stray electrical currents. The use of wood ties in itself is insufficient to protect against stray currents. Consideration should be given to isolating the rail from the surrounding track structure in areas adjacent to underground utilities, ducts and other structures. Insulators should be placed at the base of the tie plate and insulating thimbles should be positioned in the screw spike holes to isolate the screw spikes from the base plate. Conventional rail anchors projecting into the ballast will also create a stray current leakage path. This issue should be considered during the trackwork design phase.

5.6.3.2 Wood Switch Ties

Wood switch ties should be pressured treated hardwood, preferably oak. Switch ties normally come as a set to suit the size and the general layout of the turnout. The track designer in conjunction with the special trackwork supplier should determine the appropriate layout for the switch ties.

The standard nominal dimensions for wood switch ties are:

Depth – 180 mm (7”)
Width – 230 mm (9”)
Length – varies according to the layout

All wood switch ties should be pressured treated in accordance with AREMA Manual for Railway Engineering, Chapter 30, for Ties and Wood Preservation.

5.6.3.3 Wood Transition Ties

Wood transition ties should be used at transition points between wood and concrete ties (refer to 5.3.7.1 – Transition Ties).

Wood transition ties should be pressured treated hardwood, preferably oak, spaced at 500 mm on centre.

The standard nominal dimensions for wood transition ties are:

Depth – 180 mm (7”)
Width – 230 mm (9”)
Length: varies according to the layout (refer to Figure 5.14).

Wood transition ties should be pressured treated in accordance with AREMA Manual for Railway Engineering, Chapter 30, for Ties and Wood Preservation.

5.6.3.4 Concrete Crossties

Concrete crossties should be mono-block prestressed reinforced concrete ties conforming to the current AREMA Manual for Rail Engineering, Chapter 10 “Concrete Ties”.

The precast concrete crossties should be designed to conform to practices specified in CSA A23 and should provide:

- Cast iron rail seat shoulders to fit the base of the 115 lb RE rail section
- An inward rail cant of 1:40
- A rail gauge tolerance of +/- 1 mm
- A rubberized rail seat pad providing a nominal thickness of 6 mm
- Electrical isolation

Unless otherwise specified, adjustments designed to permit gauge widening can be considered.

The shoulders provide lateral restraint to maintain track gauge and are designed to accept spring clips. Shoulders should conform to the testing requirements for concrete ties as outlined in the current AREMA Manual Railway Engineering, Chapter 10 “Concrete Ties”.

Shoulders, spring clips, insulators and rail seat pads are an integral part of the concrete tie design and should be provided as part of the tie package by the concrete tie supplier.

To improve the lateral stability of conventional smooth bottom ties in sharp curves, tie spacing in curves with a radius less than 300 m may be reduced by 75 mm, if necessary. A track structure analysis may be warranted prior to making tie spacing adjustments (refer to Section 5.3.2.2 for typical tie spacing).

Concrete crossties designed with variable canted rail seat can be used for rail cant transition from zero cant at special trackwork to the standard 1:40 rail cant in the track system.

A typical concrete crosstie is shown in Figure 5.26.

5.6.3.5 Concrete Switch Ties

Concrete switch ties are customized items designed specifically for a given turnout at a given turnout location to match the special switch plates.

Concrete switch ties require precision casting of anchor bolt inserts. The precise layout must be pre-determined by the special trackwork supplier and coordinated with the concrete tie supplier for tie casting.

Concrete switch ties are the preferred option for mainline turnouts, subject to a maintenance cost-benefit versus economies of scale analysis.

5.6.3.6 Composite Crossties

Composite crossties used on road crossings should be composed primarily of post-consumer recycled high density polyethylene (HDPE) conforming to AREMA recommendations. The standard nominal dimensions for composite crossties are:

Depth – 180 mm (7”)
Width – 230 mm (9”)
Length – 2600 mm (8’-6”)

Current track design generally includes protection against stray electrical currents. Consideration should be given to isolating the rail from the surrounding track structure in areas adjacent to underground utilities, ducts and other structures. Insulators should be placed at the base of the tie plate and insulating thimbles should be positioned in the screw spike holes to isolate the screw spikes from the base plate. Conventional rail anchors projecting into the ballast will also create a stray current leakage path. This issue should be considered during the trackwork design phase.

5.6.4 Ballast

At the minimum, ballast used for the tie installation should comply with the requirements of current AREMA Manual for Railway Engineering, Chapter 1 “Roadway and Ballast” as specified for concrete tie installations.

Ballast should be a clean 100% crushed rock with a hard, durable, dense, angular particle stone providing sharp corners with a minimum of flat and elongated pieces. These properties will provide stability, durability and proper drainage. Granites and quartzites are the preferred aggregate types. Dolostone is not permitted.

The ballast specification should to provide a 100% crushed ballast conforming to the AREMA No. 3 gradation.

Ballast depth should be placed to a minimum of 225 mm below the bottom of the tie.

Before preparing a ballast specification for mainline the consultant should review the requirements with ETS.

Ballast of finer gradation should be used in transition slab area where the space between the bottom of tie and the slab restricts the tamping of ballast effectively.

5.6.5 Sub-ballast

Sub-ballast should have suitable mechanical, permeability, chemical and environmental characteristics and comply with the current AREMA Manual for Railway Engineering, Chapter 1 “Roadway and Ballast” as specified for Sub-ballast. Acceptable sub-ballast materials include crushed stone or crushed gravel and sands, or a mixture of these materials.

A minimum depth of 275 mm of sub-ballast should be placed on top of the subgrade, extending a minimum of 600 mm beyond the edge of the ballast.

The top surface of the sub-ballast should be graded to a minimum 3% cross slope to promote positive drainage toward the side ditches or sub-drains.

Sub-ballast should be compacted to 100% maximum dry density.

The sub-ballast layer should meet the following requirements:

- Be sufficiently impervious so that most of water penetrating through the ballast is diverted to the side ditches to prevent the saturation of subgrade.
- Be sufficiently pervious to so that water seepage or capillary water entering the sub-ballast is drained away to prevent water from accumulating below the sub-ballast.
- Possess sufficient strength to support the dynamic load distributed by the ballast section and be able to effectively transfer the load to the subgrade.

The main objectives of the sub-ballast are to provide a stable platform for placing ballast and to prevent surface water retention rutting.

5.6.6 Subgrade

The subgrade’s stability and its ability to sustain and distribute loads are dependent on the soil characteristics, its geometric configuration and the system drainage design.

The basic geometric features of the subgrade are: width of top of subgrade or bottom of cut; height of fill or depth of cut; side slope of fill or cut; and cross slope.

The width of the subgrade is determined by the width of the ballast layer.

Adequate drainage is essential to maintain the subgrade’s stability and its ability to sustain the design pressure exerted by the wheel load. Drainage should be provided either through track

ditches, intercepting ditches or a perforated sub-drain system. Typically a “non-woven geotextile fabric is used to wrap around the subdrain system.

Wet or unfavourable subgrade conditions may require the placement of a “woven” type of geotextile fabric on top of the finished subgrade, at the direction of the Consultant.

The sub-grade should be compacted to 100% of the maximum density as per the Standard Proctor Compaction Test. The optimum moisture content of the subgrade materials being placed should be within 3% of the optimum condition.

The compacted subgrade must sustain a minimum bearing pressure of 138 kPa (or 20 psi).

5.6.7 Ballast Curb

For trackway cross-sections where the right-of-way is confined (refer to Figure 5.5) the ballast and sub-ballast must to be retained by a curb. Figure 5.28 shows typical details for two standard ballast curb cross-sections. Figure 5.29 provides a typical detail for chain and bollard fencing mounted on top of the curb. Other fencing options, such as omega fence, may also be utilized.

5.7 OTHER TRACKWORK MATERIALS (OTM)

In addition to the major track components described previously the following devices are typically installed.

5.7.1 Switch Machines

Switch machines are used on both mainline and yard track for the purpose of train switching. They can be both electrically and manually operated as follows:

i. Electric switch machines on mainline must be automatic and are controlled by the signal system. Emergency back-up power must be provided. Electric switch machines should have built-in manual over-ride control for maintenance and emergency purposes.

ii. Manual hand-operated switch machines are mainly used in yard areas. They can also be installed at staging track and emergency switches where train switching is not part of the normal operation.

Switch machines are typically installed on the field side of turnouts. Switch machines to be located on the gauge side of turnout (i.e. in between rails) will only be permitted if there is space restriction in physically locating the switch machines on the field side.

The following factors should be taken into consideration in the placement of switch machines:

- Size of turnout and crossover
- Clearance requirements
- Housing and space requirements
- Switch rod dimensions and block out requirements
- Switch rod clearance requirements from trackwork components and track structure
- Switch machines mounting (i.e. adaptor plate requirements which are track structure specific to fit the as-built conditions).

Access for maintenance personnel and their vehicles is required.

5.7.2 Switch Blowers

Switch blowers should be installed at switches located on mainline track where exposed to snow conditions.

The following factors must be considered in the design and placement of switch blowers:

- Clearance requirements

- Housing and space requirements
- Blow duct dimensions
- Length of switch
- Operating control requirements
- Proximity to noise sensitive residential communities

Switch blowers must be designed to be controlled manually in the field, automatically through use of a snow detector and remotely through the Building Management System. An external light is mounted on the enclosure. When the light is on it will indicate that the blower is operating. Switch blowers are not required to be connected to the emergency back-up power system.

5.7.3 Switch Point Detectors

Switch point detectors will be installed in all switches on mainline track. Detectors are required to ensure that switches are correctly aligned and are being detected at all times by the signal system.

When designing for switch point detector connections, make allowance for the following:

- A method to connect the switch point detector at the switch point
- Provision of the proper mounting hole sizes and spacing on the switch points
- Block out requirements, if required

5.7.4 Hold-down Bars

Hold-down bars are installed in turnouts to prevent upward movement of the switch points. All mainline switches require hold-down bars. Hold-down bars are not required on yard switches.

Hold-down bars should be incorporated as an integral part of special trackwork fabrication by the special trackwork supplier. Figure 5.31 provides the typical details of the hold-down bar requirements.

5.7.5 Roller Plates

Roller plates should be incorporated in all power switches. Roller plates minimize the throwing effort of the switch machines and reduce the maintenance requirements of both the switch and switch machine.

Roller plates should be incorporated as an integral part of special trackwork fabrication by the special trackwork supplier.

5.7.6 Switch Point Protector

Switch point protector should be incorporated in all turnouts where the turnout curve is the designated as a mainline operation and the train movement is predominantly a facing point movement. Switch point protector minimizes the wheel impact on the curved switch point by transferring the wheel impact point further down toward a thicker section of the switch point. This will enhance the operation safety and reduce the premature wear of the tip of the switch point.

Switch point protectors should be incorporated as an integral part of special trackwork fabrication by the special trackwork supplier. Figure 5.32 provides the typical details of a switch point protector.

5.7.7 Friction End Stops

Friction end stops must be installed at the end of track on all mainline tracks unless sufficient stopping distance beyond the end of the line is otherwise provided. They must be able to withstand the impact load of a run-away train and be designed to engage the coupler end of the vehicle without contacting the body of the vehicle. Typically, friction end stops are

designed by the supplier based on the rail vehicle weight and estimated speed. Reference TCRP Report 155 Chapter 5.11 for design direction of friction end stops.

The following factors should be considered:

- Rail mounting requirements for the friction elements on the design rail section
- Required sliding distance beyond the point of impact

5.7.8 Wheel Stops

Wheel stops should be installed at the end of track in yard and shop tracks where speed is not a factor.

Wheel stops can be of a rail-mounted type or directly welded onto the railhead and must be able to withstand a 5 km/h impact load from a run-away train.

The following factors should be considered:

- Wheel stop clamping requirements on the design rail section
- Welding requirements, if required
- Vehicle wheel radius and point of impact on the wheel stop

Other stock-item devices such as wheel chocks, sliding wheel skates, derails etc. may be specified for installation to satisfy short term operational safety concerns during construction. Hinged derails may be specified for installation on storage tracks to protect against run away cars moving onto other tracks.

5.7.9 Rail Lubricators

Rail lubricators should be provided to mitigate noise, vibration, and rail wear in sharp curves. Typically, ETS uses rail lubricators on running rails and guard rails in curves with radius less than 200 m. The consultant should review the requirements with ETS.

The following should be considered:

- Use of bio-degradable lubricants
- Ease of access by track maintenance personnel
- Installation and maintenance requirements
- Ability in providing remote sensing and diagnostic on system malfunctions
- Protection against vandalism
- Ability to adjust lubricant injection manually to suit the track conditions on site
- Ability to operate at -40°C
- Ability to precisely direct lubricant to the gauge face of the rail, top of rail head and the contact face of guard rails.

5.7.10 Lateral Track Bracing for Stations

Track at the station platform must be secured by means of lateral track bracing to prevent movement toward the platform. The distance from track centreline to platform must be maintained at 1405 +/- 6 mm to meet the vehicle dynamic clearance requirements and to ensure passenger safety and wheel chair accessibility from a stationary LRV to the station platform.

Lateral track bracing for stations can be fabricated from pressure treated timber. The typical spacing and bracing requirements are as shown in Figures 5.8 and 5.27.

5.7.11 Rail Anchors

Rail anchors should be provided in special trackwork areas where the track geometric integrity is susceptible to change due to the change in rail axial load created by the thermal and vehicle dynamic braking. Figure 5.33 provides the typical details of a rail anchoring system.

5.8 METHODS OF JOINING RAIL

Methods used to join rail on the Edmonton system include aluminothermic welding, flash butt welding, insulated joint bars and non-insulated bolted joint bars.

Standard 6-hole joint bars matching the rail web of 100 lb ARA-A rail section should be used only for joining rails in yard tracks, unless noted otherwise.

In lieu of welded joint connection within the limits of special trackwork, non-insulated “zero gap” joints can be used to eliminate the possibility of weld failure, which can have a detrimental effect to the usefulness of the special trackwork components. Joint bars that make up the “zero gap” joint on turnout curve must be pre-bent by the special trackwork supplier to match the turnout curve radius. All “zero gap” joint kits should have the similar section as the 6-hole insulated joint bars complete with A490 structural steel bolts and lock nuts (refer to Section 5.8.3). 2 – 50 kcmil bonding cables around the rail ends should also be provided across the “zero gap” joint to ensure the continuity of return current is maintained.

5.8.1 Welding Processes

5.8.1.1 Aluminothermic Welding

Standard preheat welds are preferred subject to pre-qualification testing.

5.8.1.2 Electric Flash Butt Welding

Electric flash butt welding can be used as an alternate for welding rail strings. This may be the preferred option if production speed savings are able to offset the higher implementation costs.

5.8.1.3 Testing and Inspection of Welds:

All rail welding requires stringent testing and inspection. The testing and inspection requirements are as follows:

i. Qualification Testing

   Prior to production welding, qualification test welds must be performed to qualify the weld kits, welding set-up, welding process and procedures, and welding crews for the work.

   The following tests must be complete on at least one sample test weld:

   - Visual and Magnetic Particle Inspections in accordance with ASTM B709
   - Ultrasonic Testing by a qualified independent testing agency
   - Slow Bend Test on one passed test weld in accordance with AREMA, Volume 1, Chapter 4, Figure 2-50.

ii. Production Weld Testing

   All production welds must be inspected visually, ultrasonically and by magnetic particle testing before the tracks are put into service.

   All production welds must be tested by an independent testing agency.

iii. Weld Repair

   Defective welds detected in the finished track must be replaced. The preferred method of replacing welds is to cut out the defective weld and insert a new section of rail, not less than 4.5 m long, joining the new section with aluminothermic welds. The new welds must be inspected and tested.

iv. Weld Finishing and Tolerances

The weld finishing requirements and allowable tolerances are as follows:

- The gauge side, field side and running surface of the railhead must be ground until the full length of a one metre long straight edge, centred over the weld, contacts these surfaces continuously.
- The top and side of the railhead must be finished to within +0.25/-0 mm of the parent section.
- Where the weld contacts a rail fastener or rail pad, the bottom, top and sides of the rail base must be finished to within +0.25/-0 mm of the rail section.

5.8.2 Non-insulated Joints

Standard non-insulated joint bars should only be used in yard tracks or within the limits of special trackwork, unless noted otherwise. They must match the rail section and should have a minimum of six (6) bolts.

Joint bars where used in embedded shop track can be partly worn; however, they should be inspected for bolt cracks and defects by the contractor.

Joint bars should not be used on mainline except within the limits of special trackwork or when needed as a temporary safety measure to connect broken rails or provided added protection at rail or weld defect location.

5.8.3 Insulated Joints

Insulated joints are used to define the signal blocks on mainline. ETS and the signal consultant will determine joint locations.

The following criteria apply:

- Insulated joint must match the rail web of rail section used.
- Insulated joints should be 914 mm in length, with 6 holes, conforming to current AREMA Manual for Railway Engineering, Chapter 4, “Specifications for Quenched Carbon – Steel Joint Bar”. Bolts used for the fastening the joint bars should meet the chemical composition and mechanical property requirements of ASTM A490. Insulated joints should be glued to provide sufficient strength to withstand rail deflection and rail separation.
- Insulated joints should be installed as kits.
- Pairs of insulated joints should have a stagger of 1 m, unless otherwise directed by ETS or the Signals Designer.
- Insulated joints must meet the minimum resistively requirement of 1 megohm.
- Consideration must be given to method and location for connecting impedance bonds.

5.9 TRACK CONSTRUCTION TOLERANCES

5.9.1 General

Allowable construction tolerances are presented for the purpose of ensuring the trackwork design objectives are met as closely as possible.

All track and trackwork related components for the Edmonton LRT System should be designed and installed to within the allowable construction deviations as listed in the following table. Track gauge, cross-level, superelevation and alignment deviations are acceptable if the rate of change is within the specified tolerances.

			HORIZONTAL TRACK ALIGNMENT	HORIZONTAL TRACK ALIGNMENT	VERTICAL TRACK ALIGNMENT	VERTICAL TRACK ALIGNMENT
Track Classification	Gauge Deviation	Crosslevel Deviation	Total Deviation	Middle Ordinate in 20 m chord	Total Deviation	Middle Ordinate in 20 m chord
Mainline	+ 3 mm - 1 mm	+ 3 mm - 3 mm	+ 6 mm - 6 mm	+ 3 mm - 3 mm	+ 6 mm - 6 mm	+ 3 mm - 3 mm
Secondary	+ 3 mm - 1 mm	+ 3 mm - 3 mm	+ 6 mm - 6 mm	+ 3 mm - 3 mm	+ 6 mm - 6 mm	+ 3 mm - 3 mm
Yard	+ 3 mm - 3 mm	+ 3 mm - 3 mm	+ 12 mm - 12 mm	+ 3 mm - 3 mm	+ 12 mm - 12 mm	+ 3 mm - 3 mm
Shop	+ 3 mm - 3 mm	+ 3 mm - 3 mm	+ 6 mm - 6 mm	+ 3 mm - 3 mm	+ 6 mm - 6 mm	+ 3 mm - 3 mm
Special Trackwork	+ 3 mm - 1 mm	+ 3 mm - 3 mm	+ 6 mm - 6 mm	+ 3 mm - 3 mm	+ 6 mm - 6 mm	+ 3 mm - 3 mm

Table 5.3 Allowable Track Construction Tolerances

Notes:

i. Total Deviation is the deviation measured between the theoretical or best-fit alignment and the actual alignment at a given location. The best-fit alignment takes account for changes made to the theoretical alignment during construction based on the survey of actual field conditions.
ii. Total Deviation in platform areas should be zero toward platforms and not exceeding +5 mm away from platforms in the horizontal direction.

The rate of variation or change allowed for Mainline track should not exceed the following limits:

Horizontal: 3 mm per 9 m measured in increments of 3 m.
Vertical: 3 mm per 9 m measured in increments of 3 m.
Gauge: 3 mm per 9 m measured in increments of 3 m.
Cross level: 2 mm per 9 m measured in increments of 3 m.

The rate of variation or change for secondary, yard and shop tracks is not as critical since secondary, yard and shop tracks do not carry revenue passengers and operate at a lower speed.

5.10 RAIL GRINDING

Prior to revenue service all newly installed mainline rails should be profiled using a production type rail grinder. Rail profiling is required to:

- Remove mill scale, rust, surface imperfections and railhead irregularities
- Mitigate the onset of rail corrugation
- Match the rail to the ETS design rail profile
- Optimize ride quality
- Remove minor rail defects
- Reduce airborne noise and vibration
- Extend rail and wheel life

To ensure truck stability of the LRV's the ground rail profile must be provided in accordance with the ground rail profiles shown in Figure 5.30.

Note: The ground rail profile is independent of the rail type. The design and location of the wheel/rail contact band is the same regardless if the rail is 115 lb RE or 100 lb ARA-A.

5.11 DESIGN COORDINATION

It is the responsibility of the trackwork consultant to interface with other design consultants and with ETS to ensure the overall system requirements are achieved.

Typical coordination requirements include:

- Structural loads for the vehicle and equipment (static, dynamic, thermal)
- Civil and structural interface for track support structure (e.g. concrete base slab, subgrade preparation and drainage provisions)
- Grounding provisions, if required
- Traction Power, Mechanical and Electrical interfaces (e.g. buried cables and conduits, vaults and catenary masts)
- Signal interface (location of insulated bonded joints, switch point detectors, bonding cables, switch machine mountings, etc)
- Communication systems interface (buried telephone wires, copper broadband, fibre optics cable)

5.12 QUALITY ASSURANCE AND QUALITY CONTROL

All trackwork materials designed or procured for the Edmonton LRT System must comply with the established codes, standards and criteria.

The trackwork consultant, in conjunction with ETS, must establish a comprehensive quality assurance (QA) quality control (QC) program which consists of material specification and tolerance verification during Factory Acceptance Tests and field inspections during the trackwork installation process.

At the direction of ETS the following minimum QA/QC activities should be conducted:

- Hold-point Inspections
- Material Pre-shipment Inspections
- Construction Verification and Acceptance
- Records Audits

5.13 PROJECT DOCUMENTATION

Refer to Chapter 1, General Section 1.7 for the guidelines pertaining to the production of Plan of Record drawings and O&M Manuals.

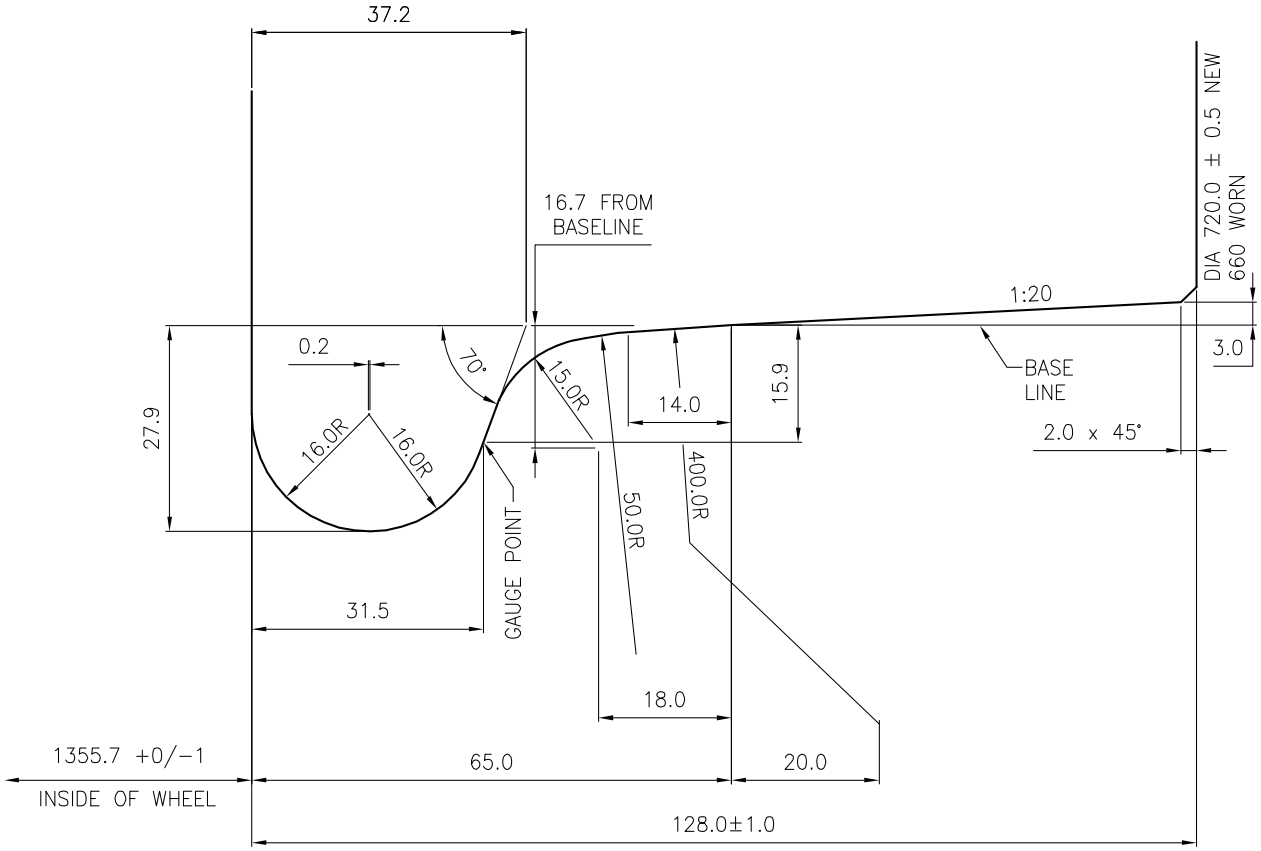

		FIGURE 5.1 LIGHT RAIL VEHICLE WHEEL PROFILE	CHAPTER 5 TRACKWORK
DATE	REVISION		

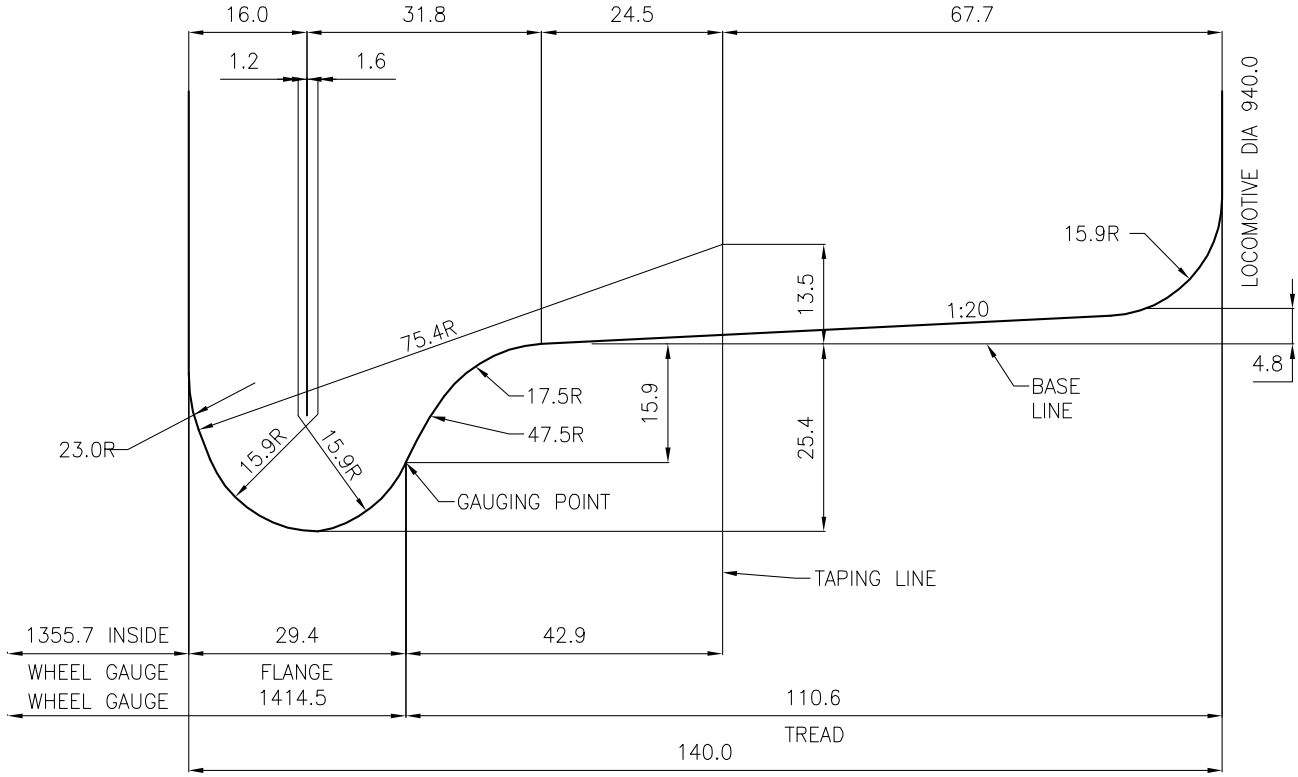

		FIGURE 5.2 WORK TRAIN STANDARD A.A.R. WHEEL PROFILE	CHAPTER 5 TRACKWORK
DATE	REVISION		

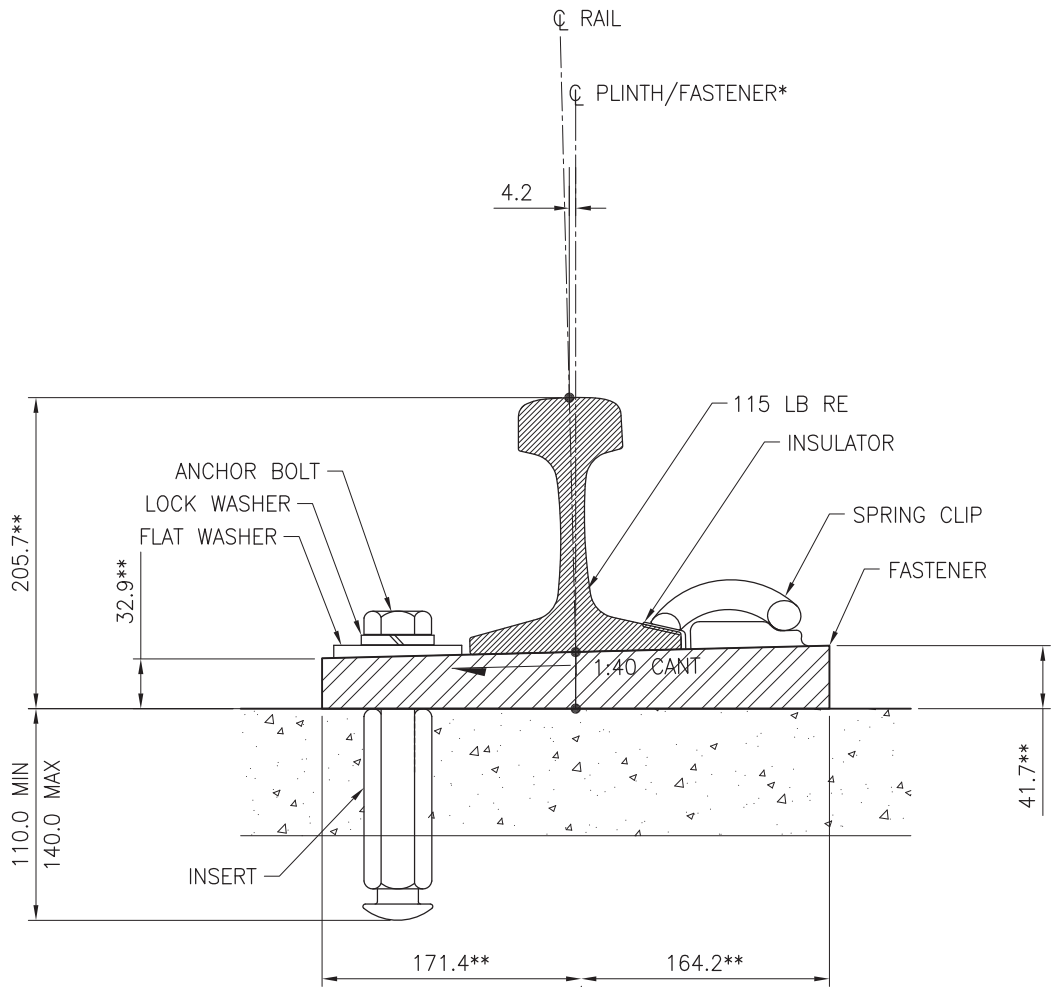

NOTES

* FOR CONSTRUCTION PURPOSES CENTRELINE OF FASTENER IS EQUAL TO CENTRELINE OF STANDARD 650X1200 PLINTH

** DIMENSIONS TO BE CONFIRMED

		FIGURE 5.3A TYPICAL 1:40 CANTED DIRECT FIXATION FASTENER AND ANCHORING ASSEMBLY	CHAPTER 5 TRACKWORK
30-JUN-11	TITLE CHANGE		
DATE	REVISION		

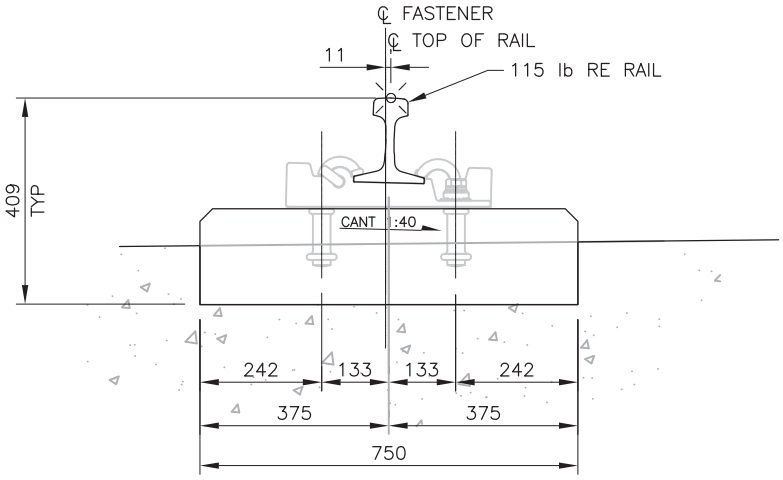

TYPICAL CAST–IN–PLACE CONCRETE PLINTH

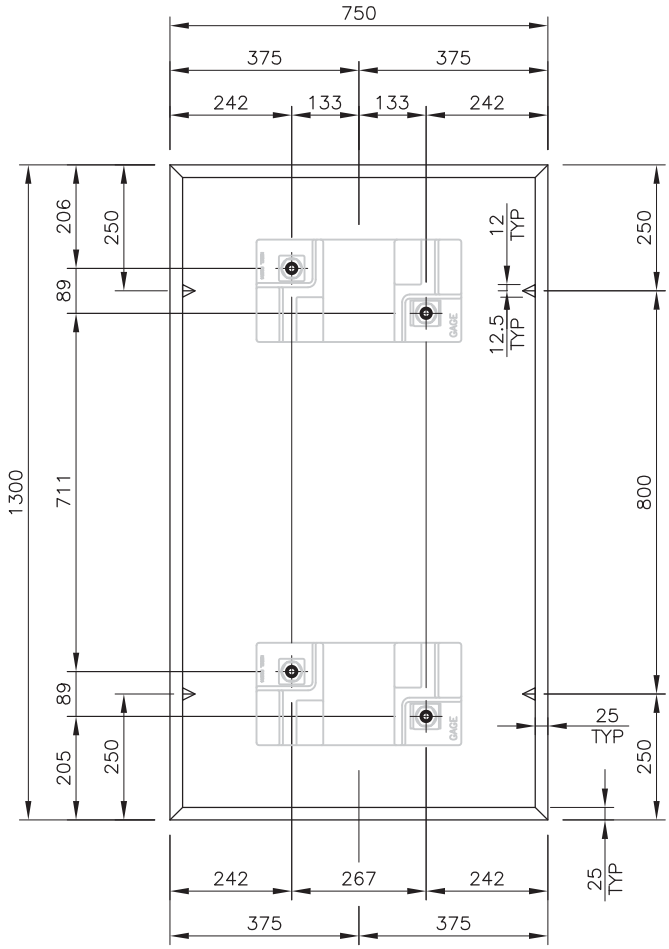

FASTENER ARRANGEMENT FOR
CAST–IN–PLACE CONCRETE PLINTHS

		FIGURE 5.3B CAST–IN–PLACE PLINTH	CHAPTER 5 TRACKWORK
30–JUN–11	NEW		
DATE	REVISION		

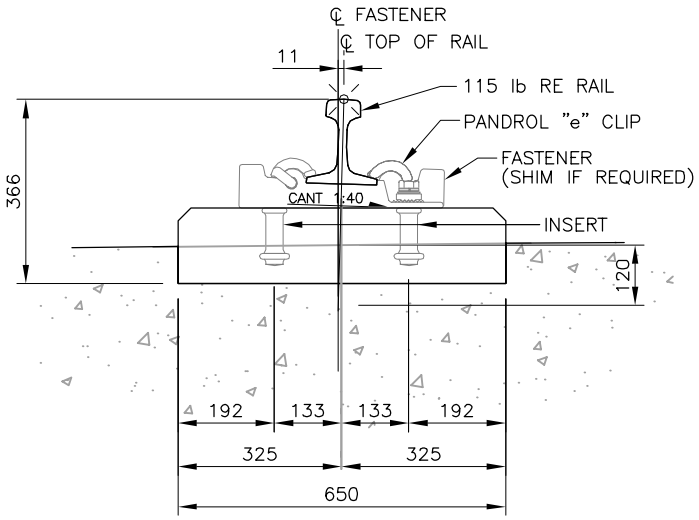

TYPICAL CAST–IN–PLACE CONCRETE PLINTH SECTION

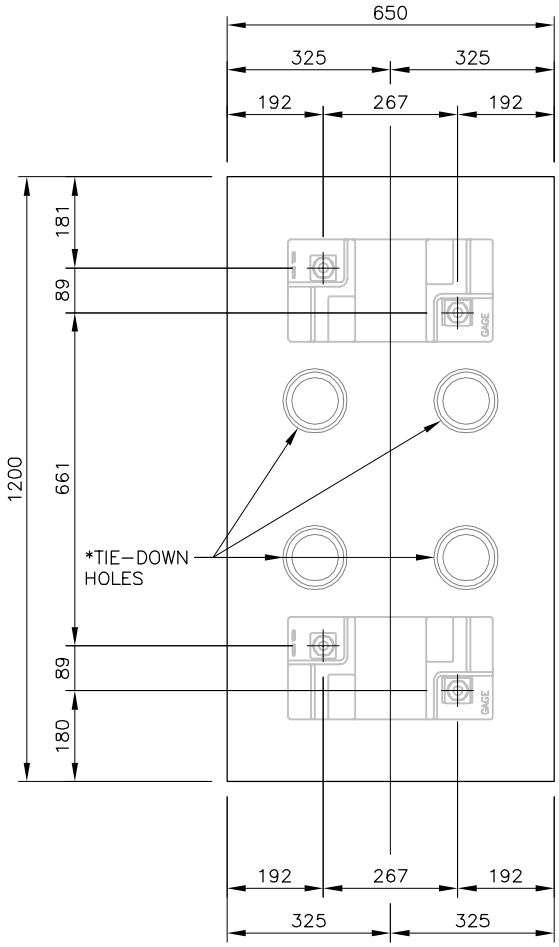

FASTENER ARRANGEMENT FOR STANDARD CAST–IN–PLACE CONCRETE PLINTHS

		FIGURE 5.3C TYPICAL 650 mm x 1200 mm CAST–IN–PLACE PLINTH	CHAPTER 5 TRACKWORK
28–JUN–16	CAST–IN–PLACE		
30–JUN–11	NEW		
DATE	REVISION		

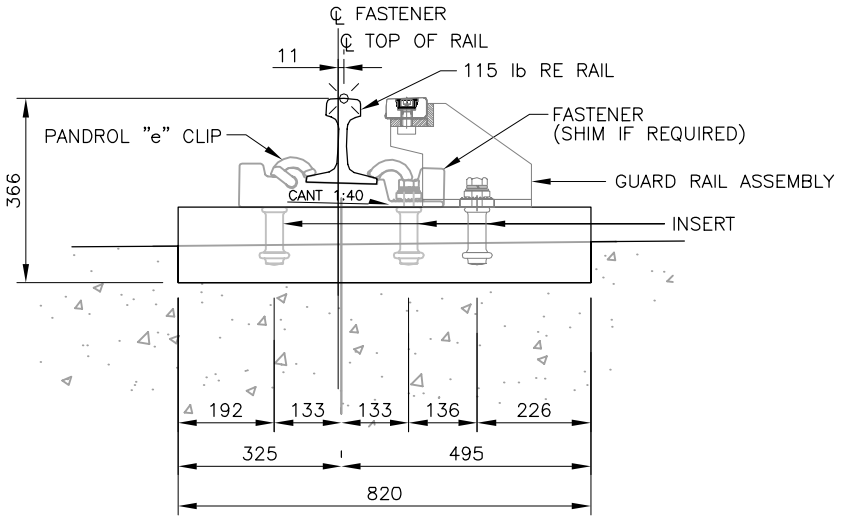

TYPICAL CAST–IN–PLACE CONCRETE PLINTH WITH GUARD RAIL

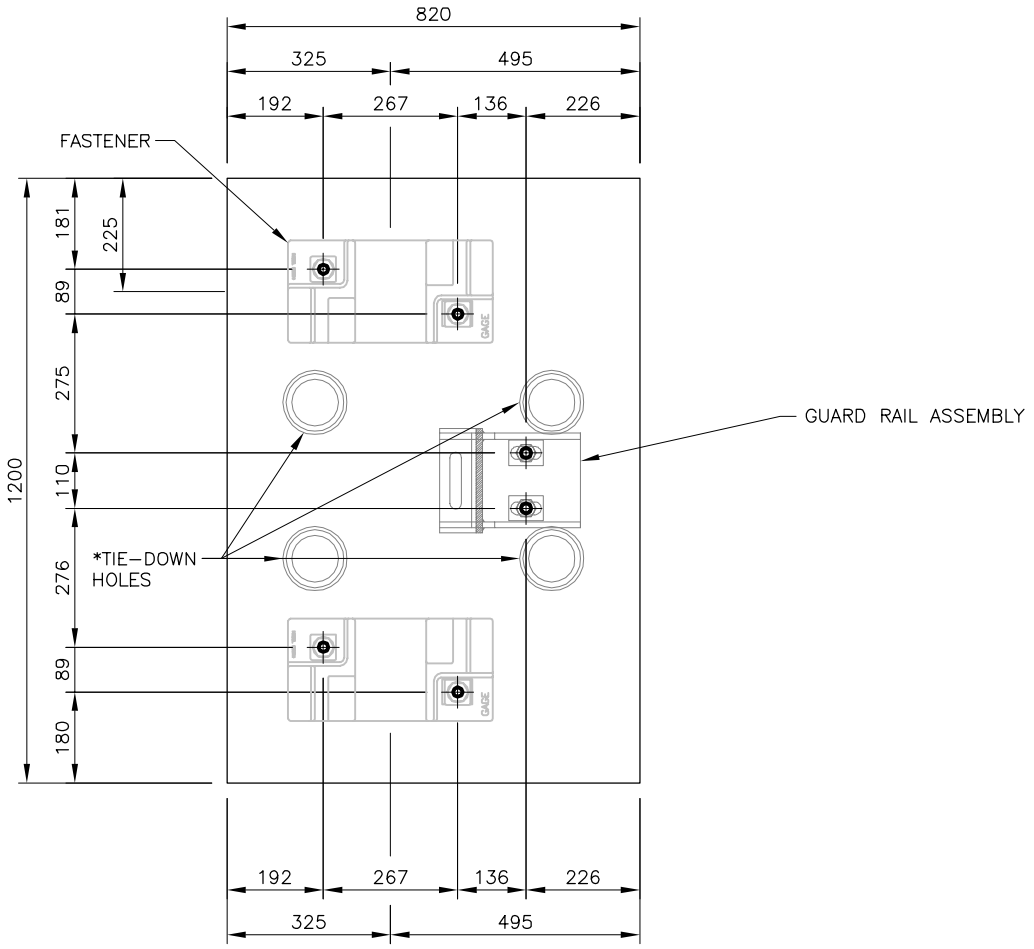

FASTENER ARRANGEMENT FOR STANDARD CAST–IN–PLACE CONCRETE PLINTHS WITH GUARD RAIL

		FIGURE 5.3D	CHAPTER 5
		TYPICAL 820 mm x 1200 mm CAST–IN–PLACE PLINTH	TRACKWORK
28–JUN–16	CAST–IN–PLACE		
30–JUN–11	NEW		
DATE	REVISION		

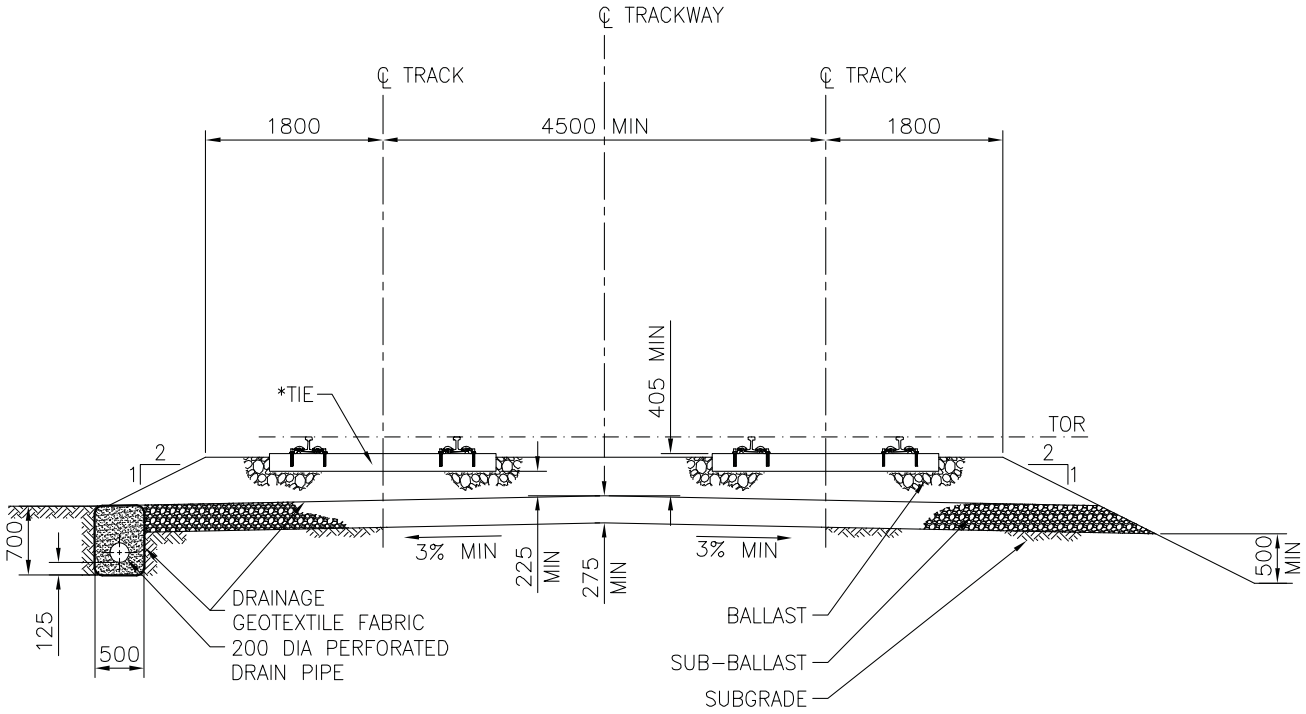

* CONCRETE TIES ARE PREFERRED OPTION FOR MAINLINE TRACK.

WOOD TIES ARE PREFERRED OPTION FOR YARD TRACK.

PLACEMENT OF GEOTEXTILE FABRIC ON SUB GRADE AS DIRECTED BY THE CONSULTANT

		FIGURE 5.4 BALLASTED TRACK AT-GRADE MAINLINE AND YARD (OPEN)	CHAPTER 5 TRACKWORK
DATE	REVISION		

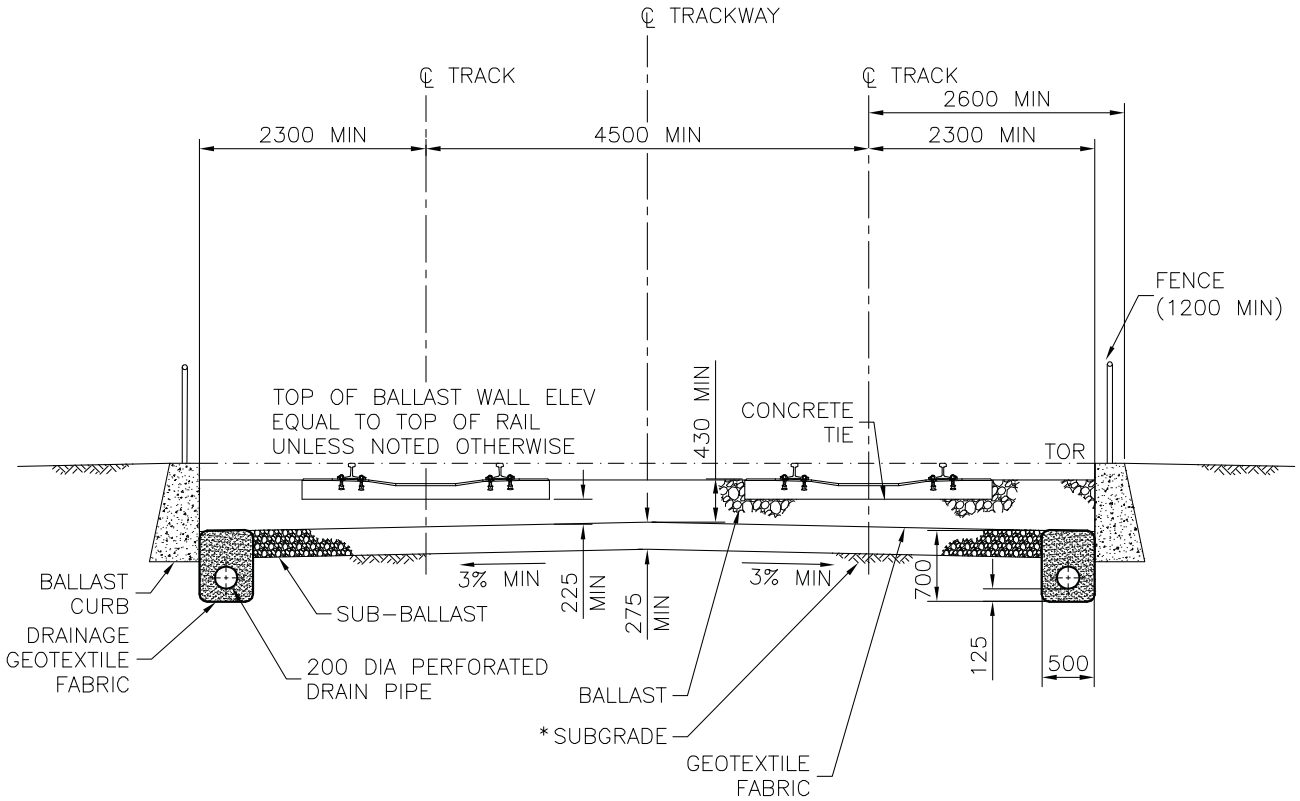

DIMENSIONS MAY VARY IN ACCORDANCE WITH THE TOP OF RAIL ELEVATION RELATIVE TO THE FINISHED GROUND LEVEL OUTSIDE TRACKWAY.

* SUBGRADE TO BE SCARIFIED. PLACEMENT OF GEOTEXTILE ON SUB-GRADE AS DIRECTED BY THE CONSULTANT.

REFER TO FIGURE 3.18 FOR COMBINED MAJOR TRACKWAY ELEMENTS.
REFER TO FIGURE 5.28 AND 5.29 FOR TYPICAL BALLAST CURB AND FENCE DETAILS.

		FIGURE 5.5	CHAPTER 5
		BALLASTED TRACK AT-GRADE MAINLINE (CONFINED)	TRACKWORK
DATE	REVISION		

* NO PEDESTRIAN CROSSING AT INTERSECTION.

** PEDESTRIAN CROSSING AT INTERSECTION.

*** TYPICAL TO PROVIDE FOR LEFT TURN BAY, PEDESTRIAN REFUGE, AND TRACK OFFSET.

**** SURFACE FINISH TO BE DETERMINED AT DESIGN PHASE.

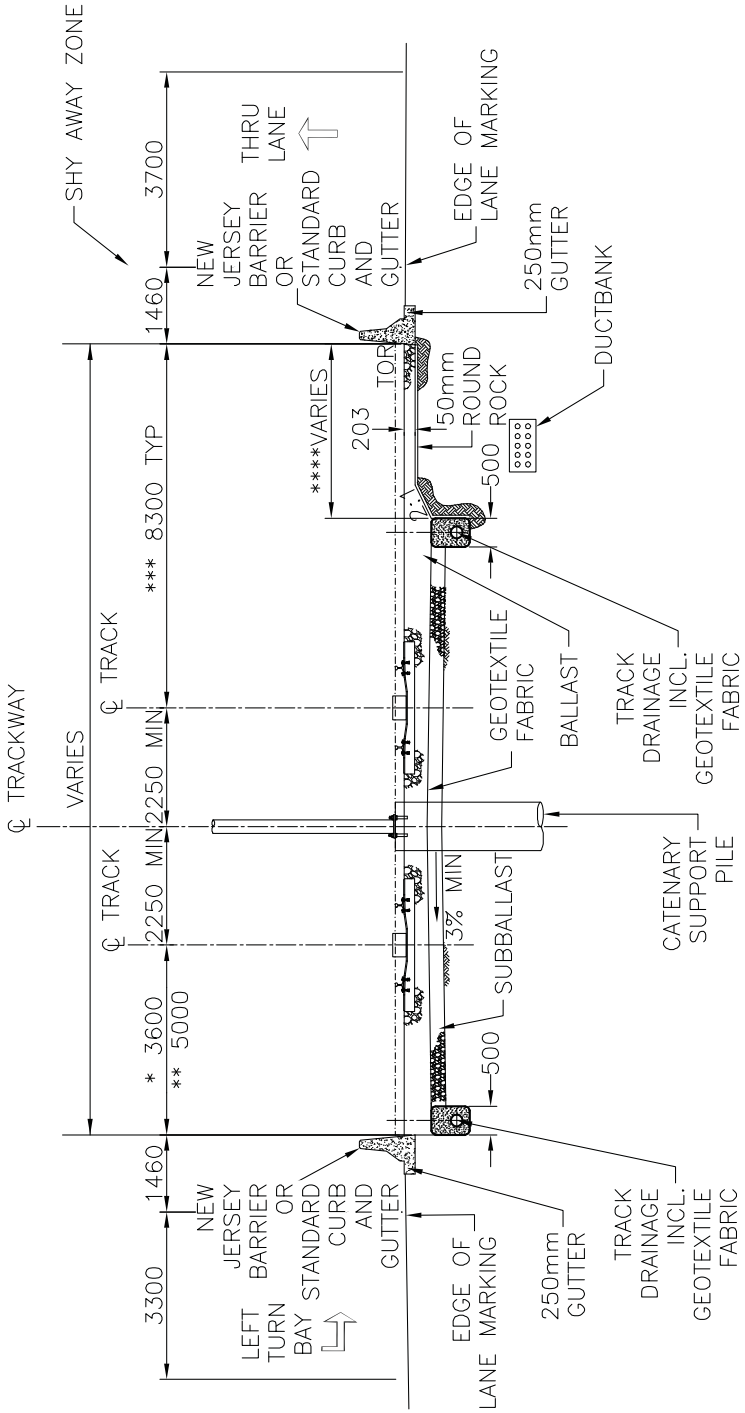

REFER TO CHAPTER 18 FIGURES 18.2 TO 18.6 FOR TYPICAL ROAD MEDIAN CONFIGURATIONS AND LRT ROW LIMITS.

SUBGRADE TO BE SCARIFIED. PLACEMENT OF GEOTEXTILE ON SUBGRADE AS DIRECTED BY THE CONSULTANT.

		FIGURE 5.6	CHAPTER 5
		BALLASTED TRACK AT–GRADE MEDIAN RUNNING	TRACKWORK
DATE	REVISION		

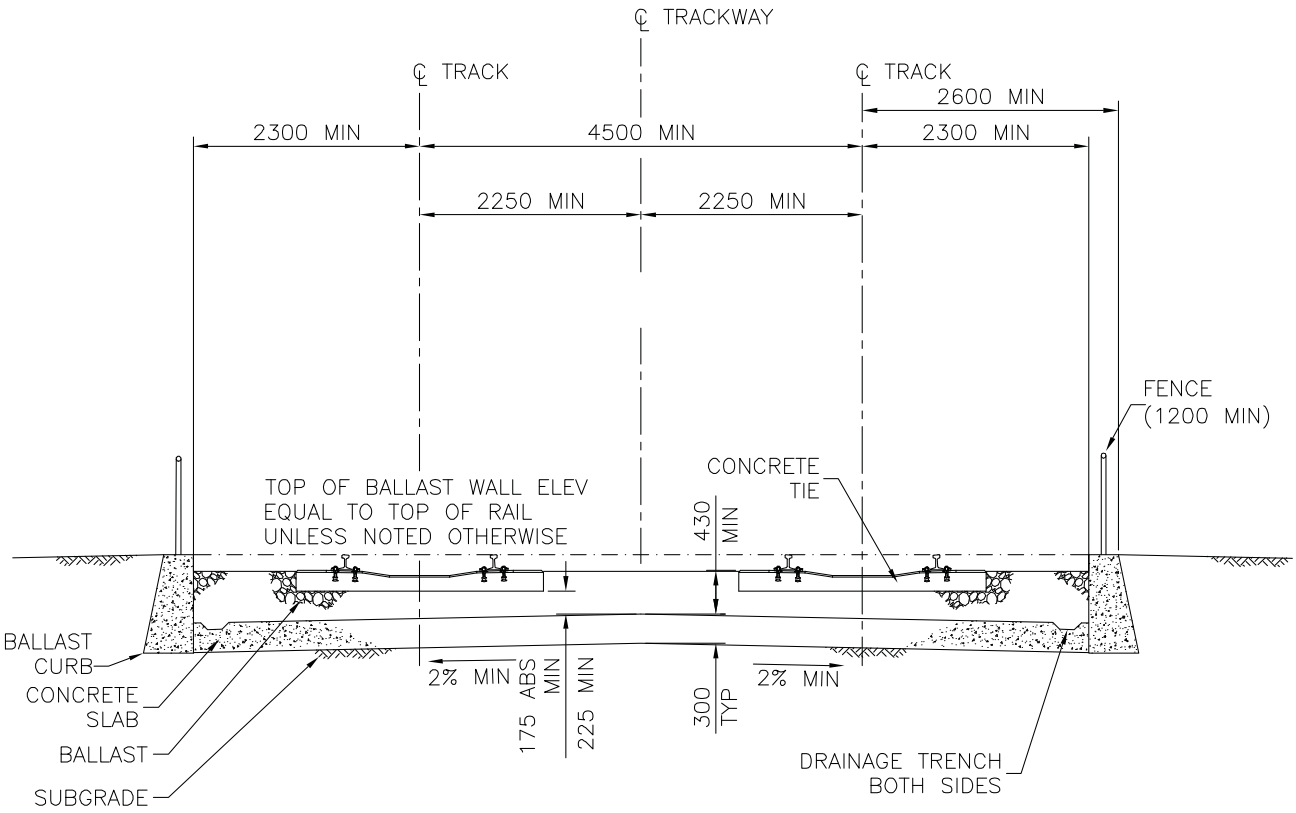

NOTE:
DIMENSIONS MAY VARY IN ACCORDANCE WITH THE TOP OF RAIL ELEVATION RELATIVE TO THE FINISHED GROUND LEVEL OUTSIDE TRACKWAY.

REFER TO FIGURE 3.18 FOR COMBINED MAJOR TRACKWAY ELEMENTS.
REFER TO FIGURE 5.28 AND 5.29 FOR TYPICAL BALLAST CURB AND FENCE DETAILS.

		FIGURE 5.7	CHAPTER 5
		BALLASTED TRACK AT–GRADE ON CONCRETE SLAB MAINLINE (CONFINED)	TRACKWORK
DATE	REVISION		

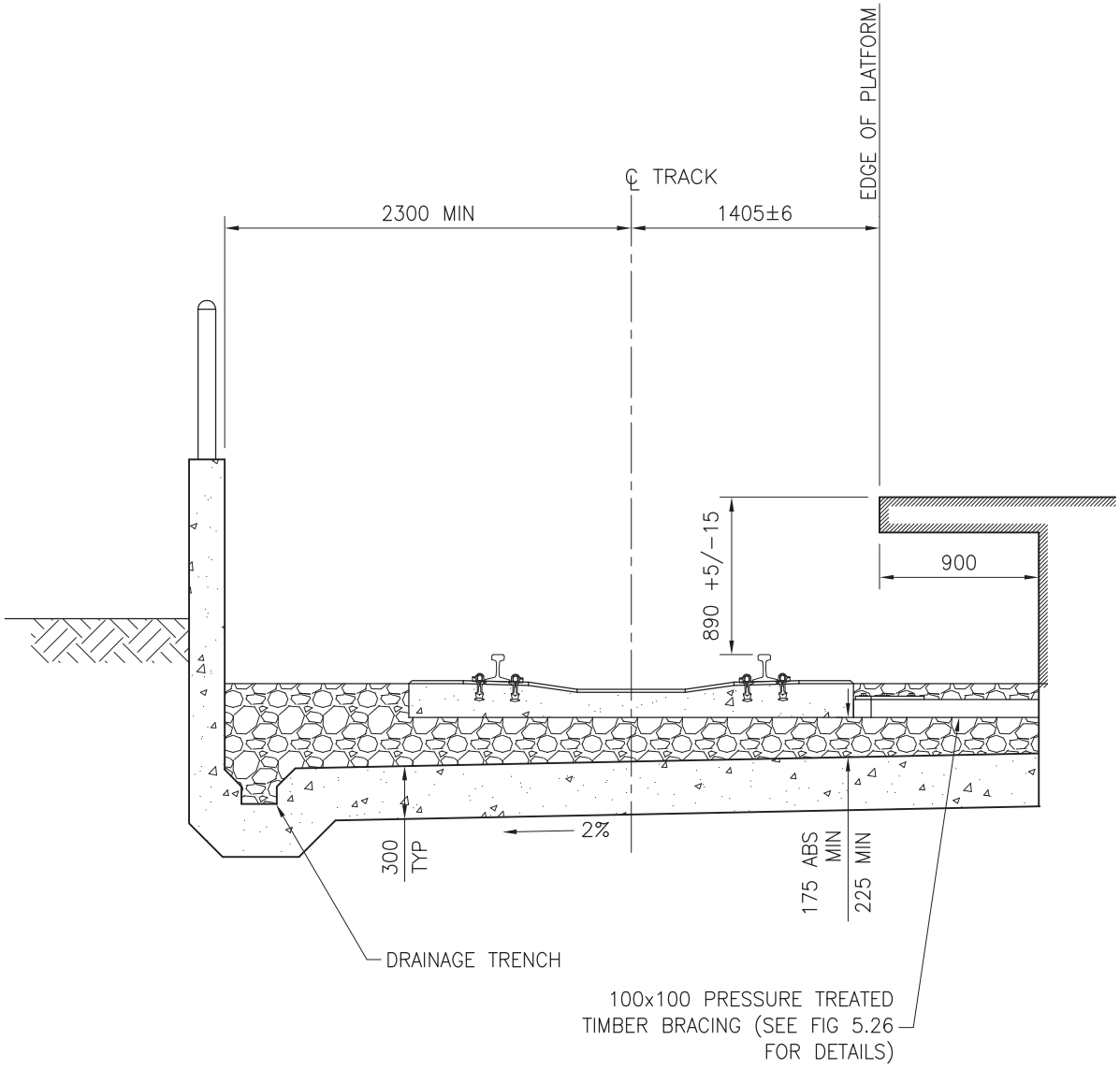

REFER TO FIGURE 3.23 FOR COMBINED MAJOR TRACKWAY ELEMENTS.

		FIGURE 5.8	CHAPTER 5
		BALLASTED TRACK ON CONCRETE SLAB STATION STRUCTURE	TRACKWORK
DATE	REVISION		

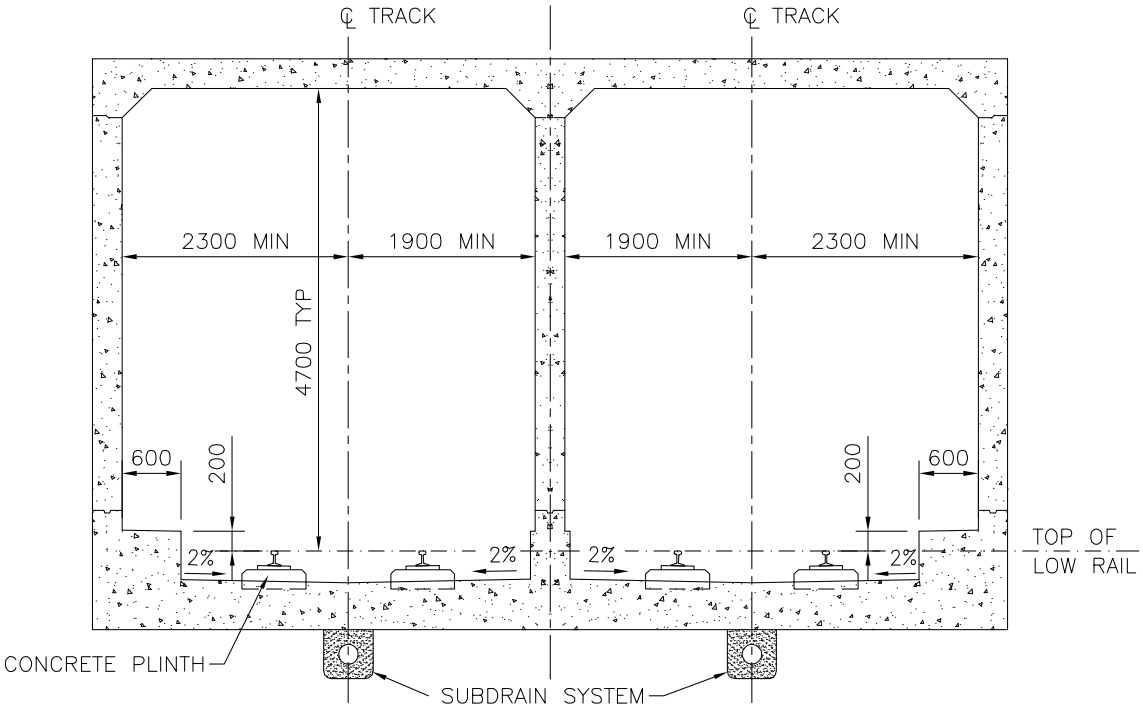

CUT AND COVER DOUBLE BOX SECTION

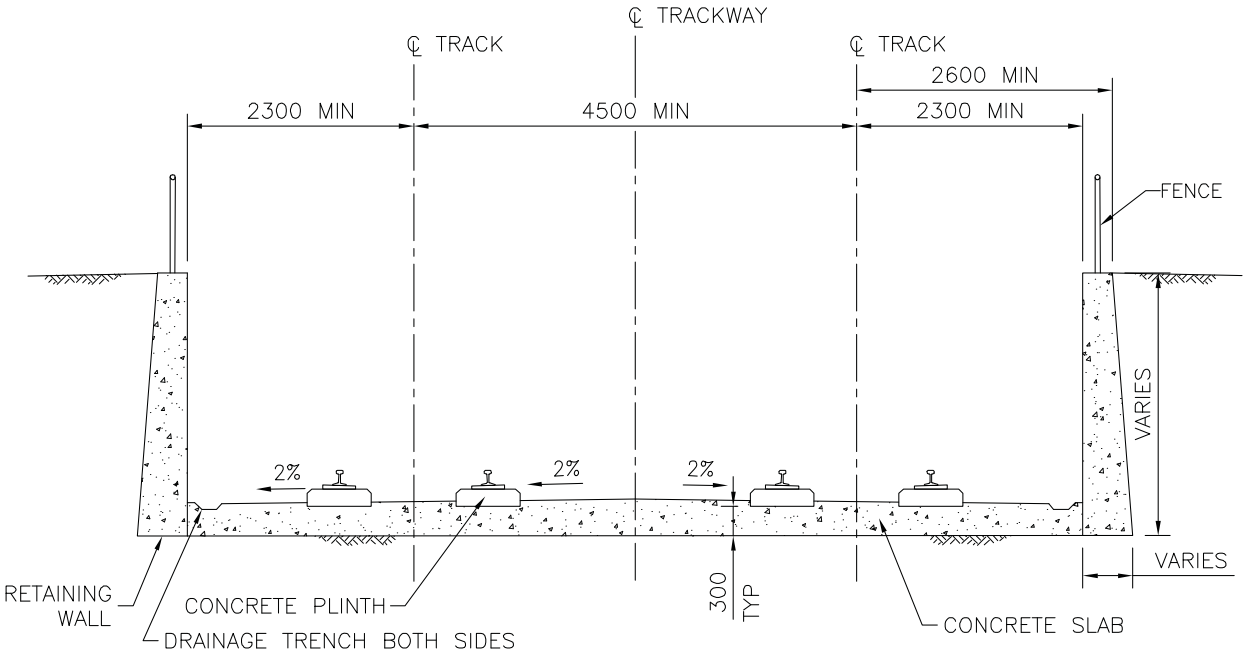

TUNNEL PORTAL STRUCTURE

REFER TO FIGURE 3.22 FOR COMBINED MAJOR TRACKWAY ELEMENTS.

		FIGURE 5.9	CHAPTER 5
		DIRECT FIXATION ON CONCRETE SLAB DOUBLE BOX/PORTAL STRUCTURE	TRACKWORK
DATE	REVISION		

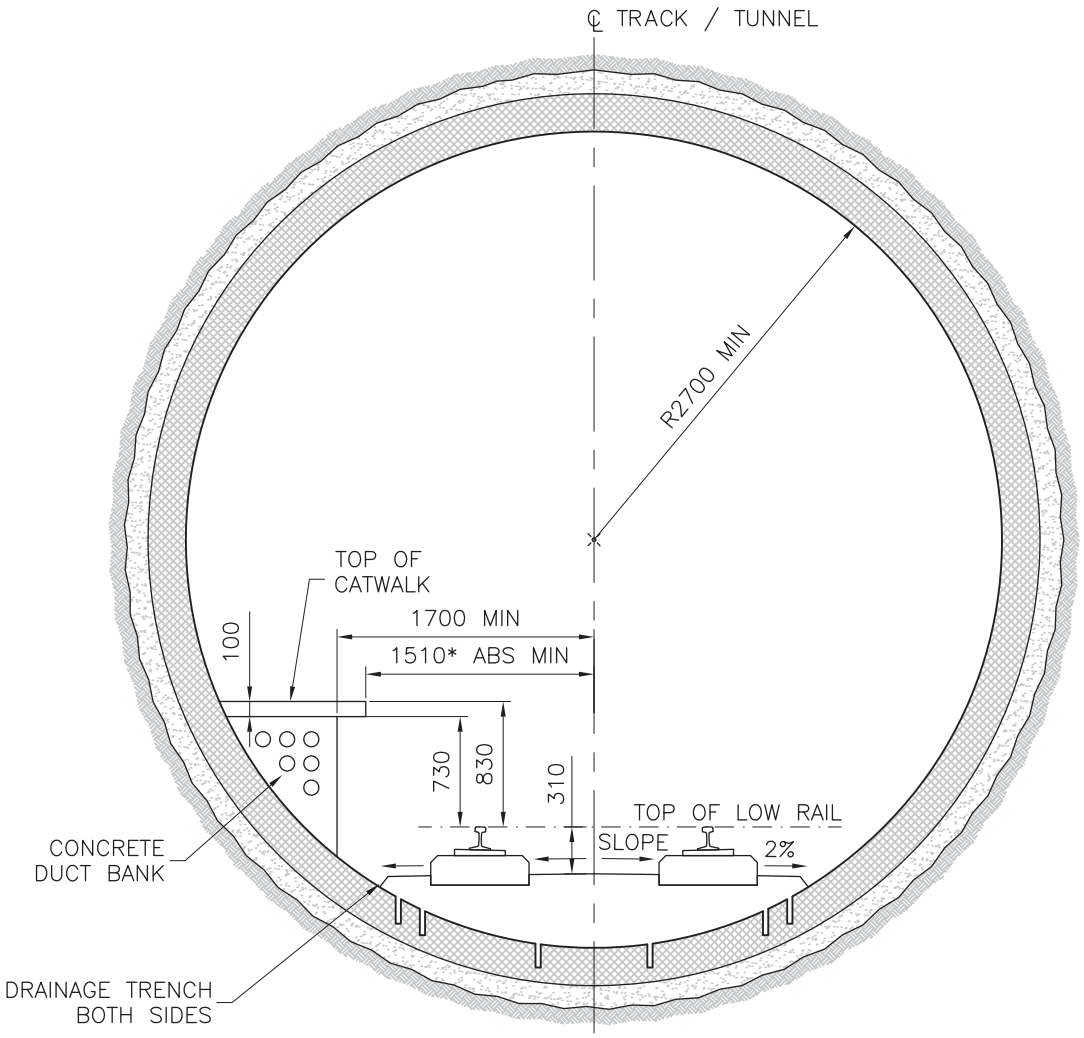

TYPICAL SECTION ON TANGENT TRACK

* THE ABSOLUTE MINIMUM DIMENSION IS BASED ON TANGENT TRACK WITH NO SUPERELEVATION.

REFER TO FIGURE 3.19 FOR COMBINED MAJOR TRACKWAY ELEMENTS.

		FIGURE 5.10	CHAPTER 5
		DIRECT FIXATION ON CONCRETE SLAB TBM TUNNEL STRUCTURE	TRACKWORK
DATE	REVISION		

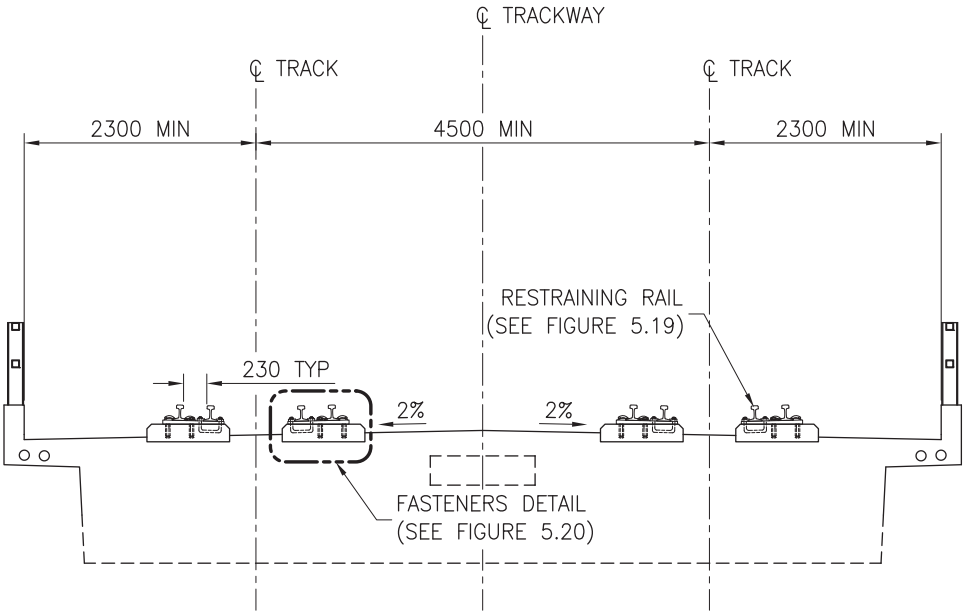

DIRECT FIXATION TO DECK

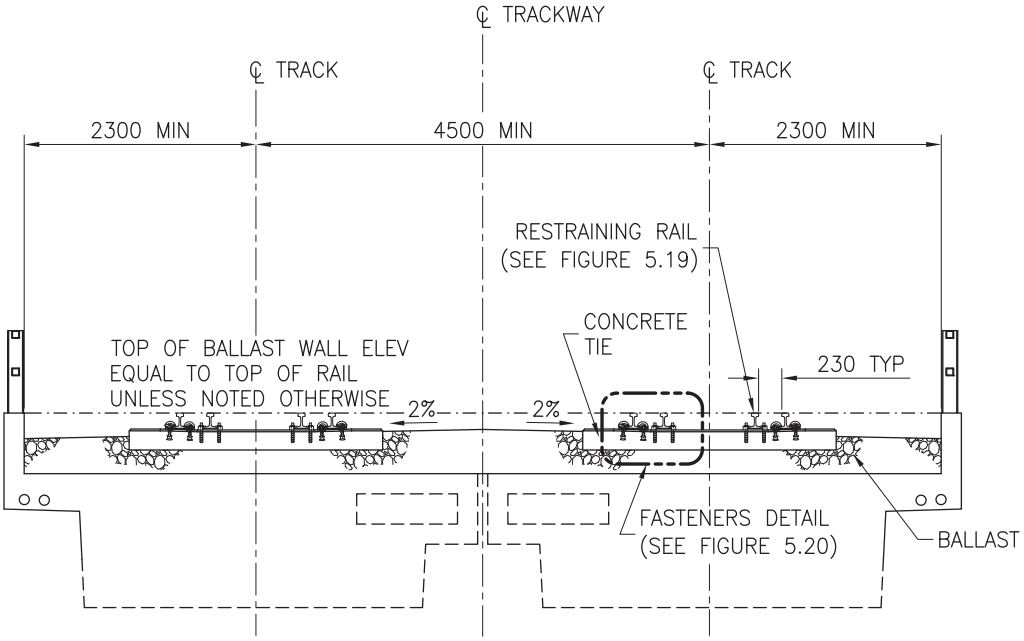

BALLASTED TRACK

REFER TO FIGURE 3.21 FOR COMBINED MAJOR TRACKWAY ELEMENTS.

		FIGURE 5.11 DIRECT FIXATION/BALLASTED TRACK AERIAL STRUCTURE	CHAPTER 5 TRACKWORK
DATE	REVISION		

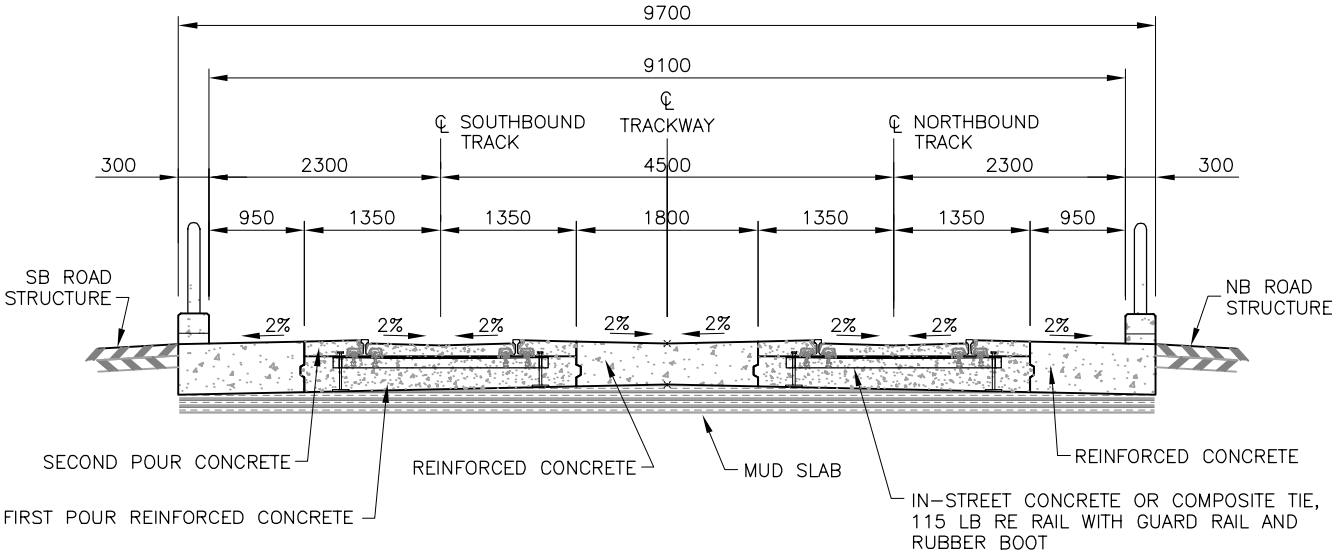

TYPICAL EMBEDDED TRACK WITH RAIL BOOT SECTION ON TANGENT

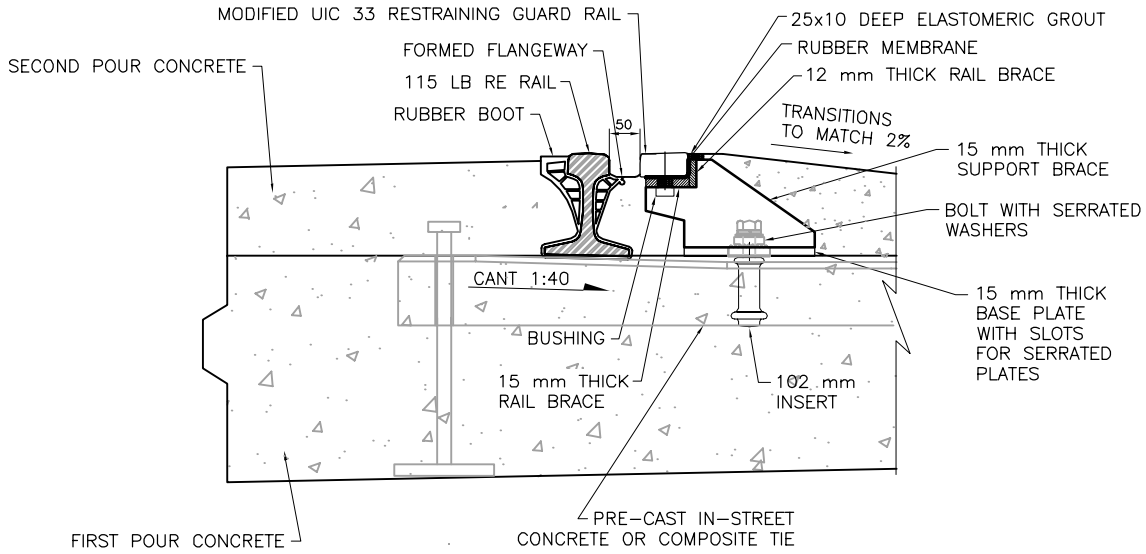

DETAIL USING TYPE 1 MOUNTING BRACKET

GUARDED EMBEDDED TRACK

		FIGURE 5.12A	CHAPTER 5
		TYPICAL EMBEDDED MAINLINE TRACK WITH GUARD RAIL	TRACKWORK
28-JUN-16			
30-JUN-11	NEW		
DATE	REVISION		

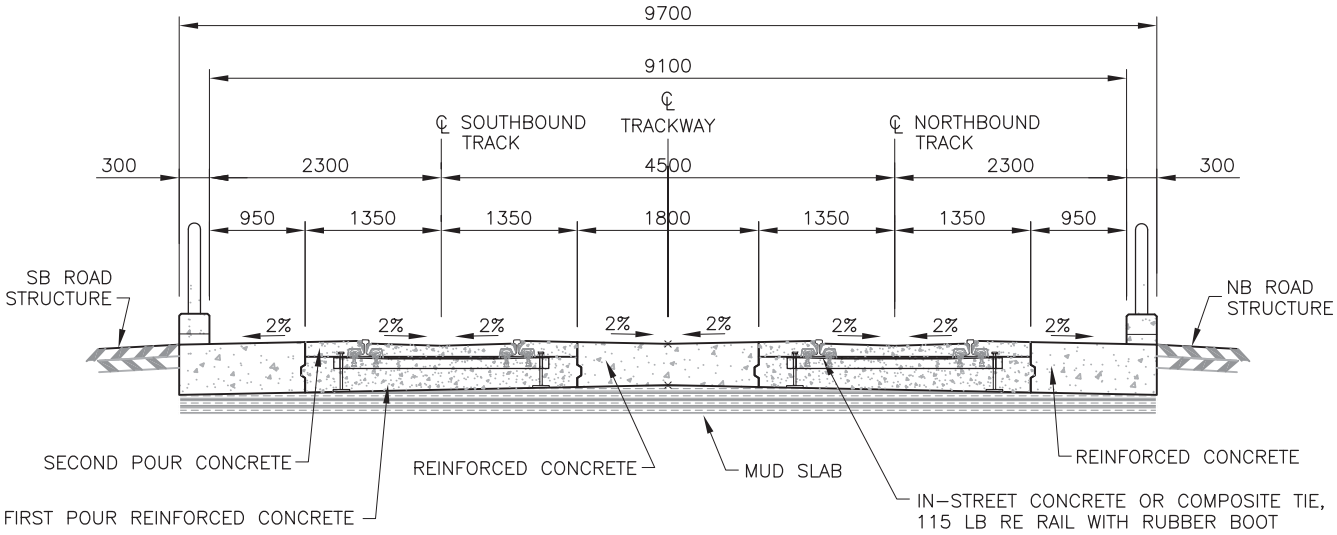

TYPICAL EMBEDDED TRACK WITH RAIL BOOT SECTION ON TANGENT

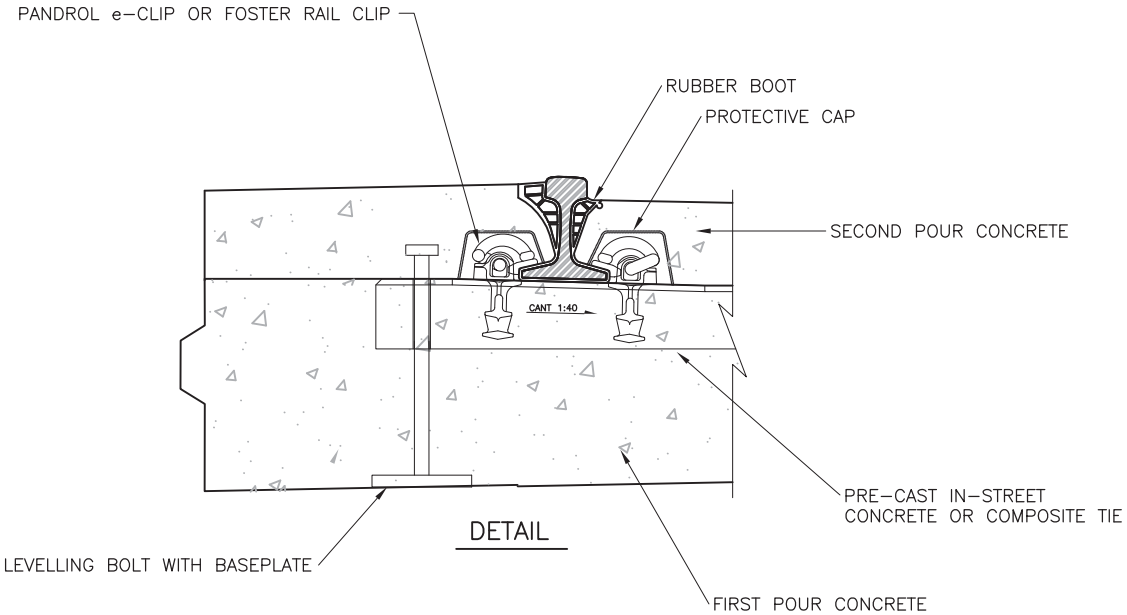

DETAIL

		FIGURE 5.12B TYPICAL EMBEDDED MAINLINE TRACK WITHOUT GUARD RAIL	CHAPTER 5 TRACKWORK
30–JUN–11	NEW		
DATE	REVISION		

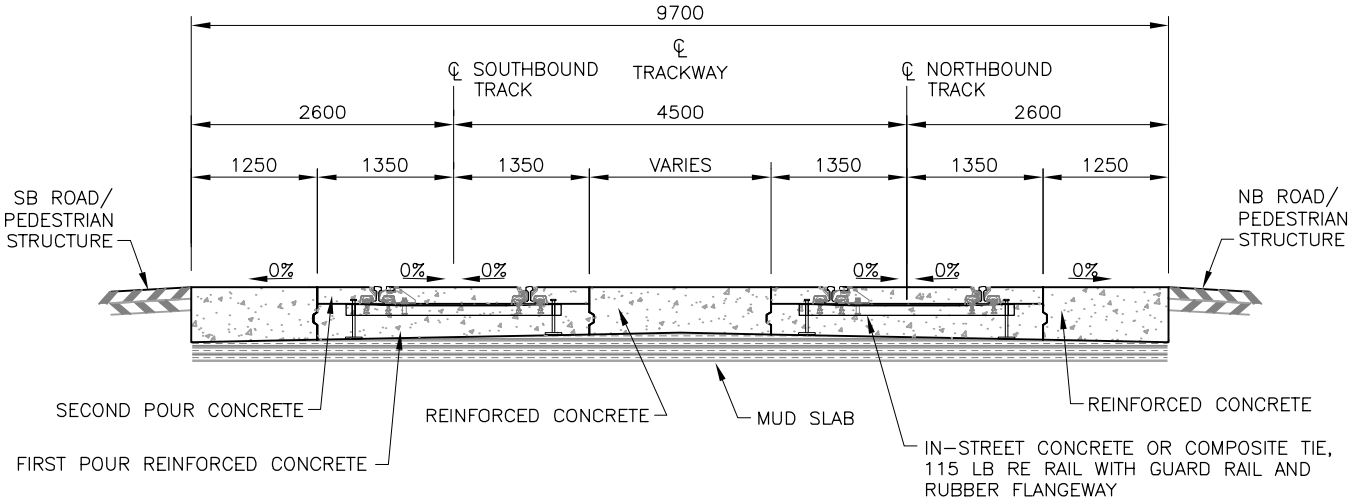

TYPICAL EMBEDDED TRACK ROAD CROSSINGS ON CURVES

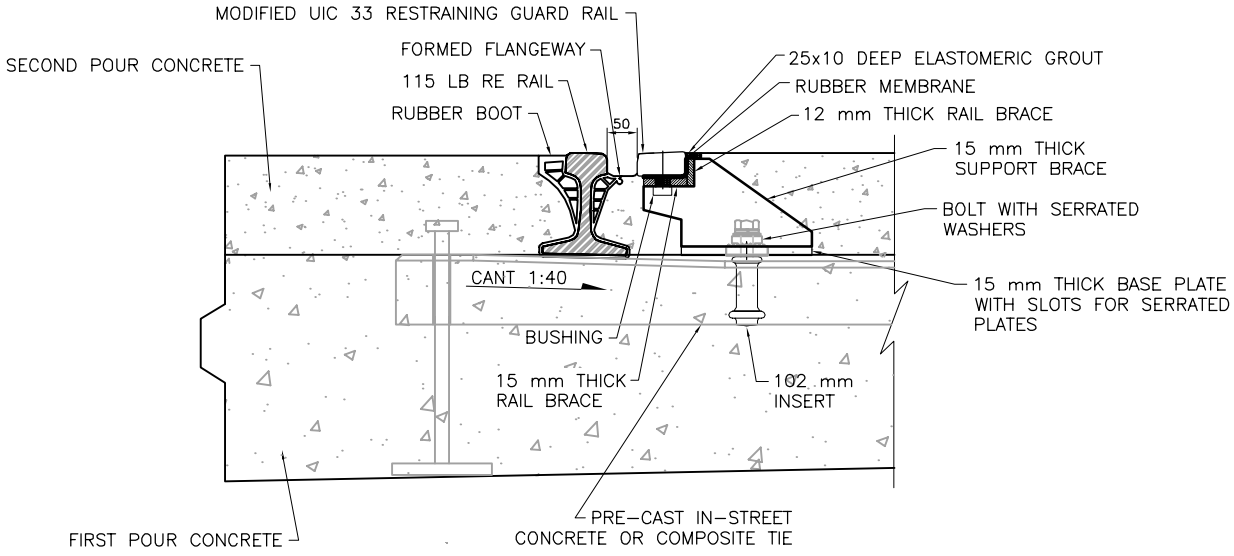

DETAIL USING TYPE 1 MOUNTING BRACKET

GUARDED EMBEDDED TRACK ROAD/PEDESTRIAN CROSSING

		FIGURE 5.12C	CHAPTER 5
		TYPICAL EMBEDDED TRACK ROAD/PEDESTRIAN CROSSING WITH GUARD RAIL	TRACKWORK
28-JUN-16			
30-JUN-11	NEW		
DATE	REVISION		

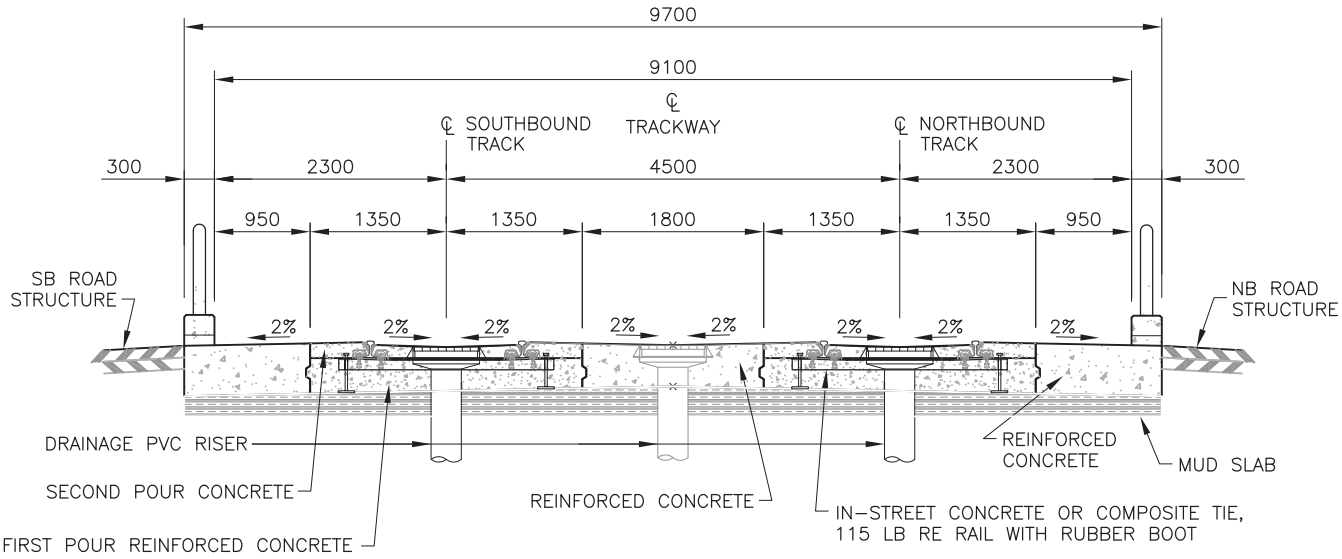

TYPICAL EMBEDDED TRACK SECTION ON TANGENT WITH TRACK DRAINS SECTION

		FIGURE 5.12D TYPICAL EMBEDDED MAINLINE TRACK WITH TRACK DRAINS	CHAPTER 5 TRACKWORK
30–JUN–11	NEW		
DATE	REVISION		

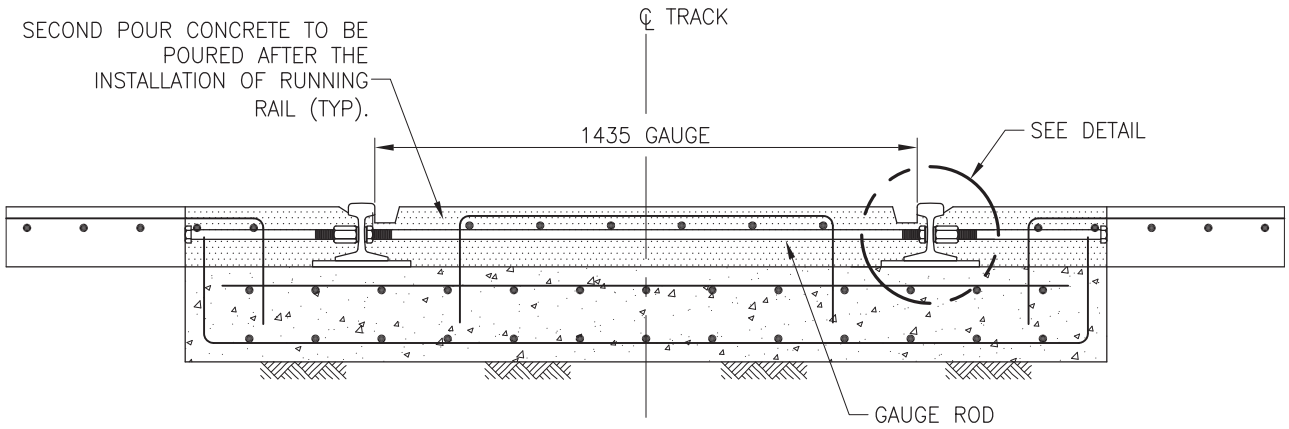

TYPICAL SECTION
EMBEDDED TRACK

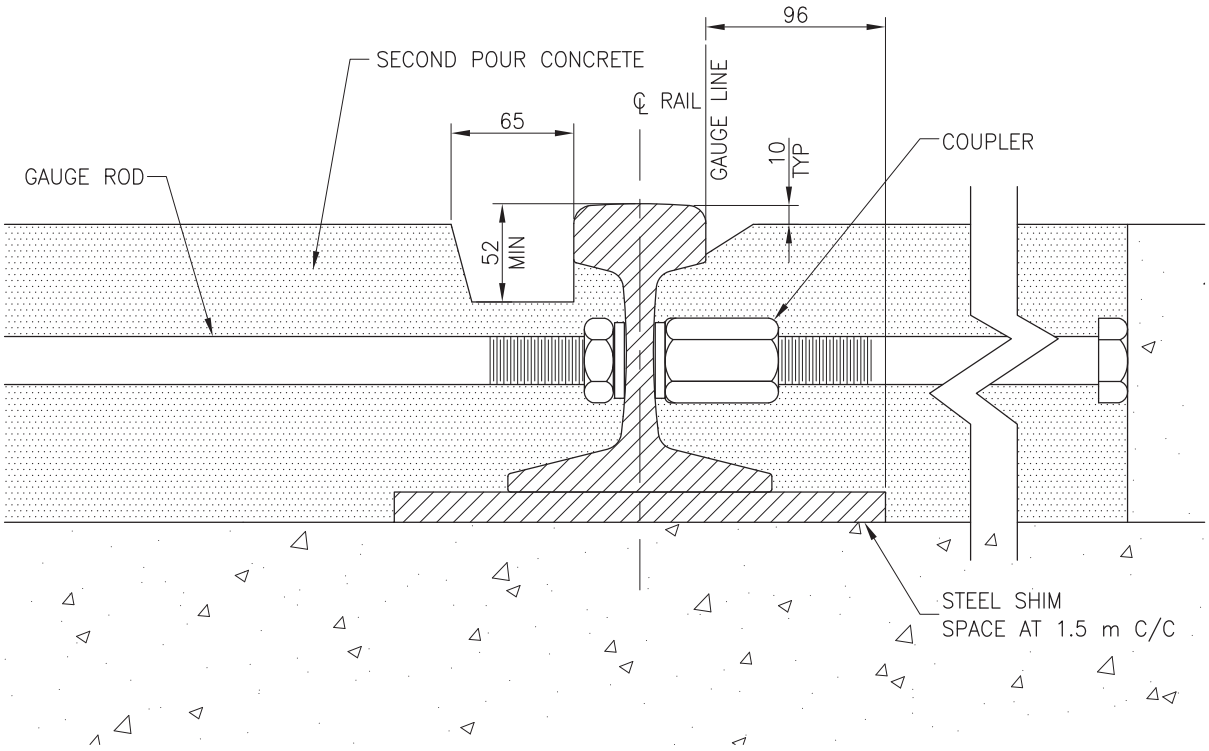

DETAIL

		FIGURE 5.12E TYPICAL EMBEDDED SHOP TRACK	CHAPTER 5 TRACKWORK
30–JUN–11	TITLE CHANGE		
DATE	REVISION		

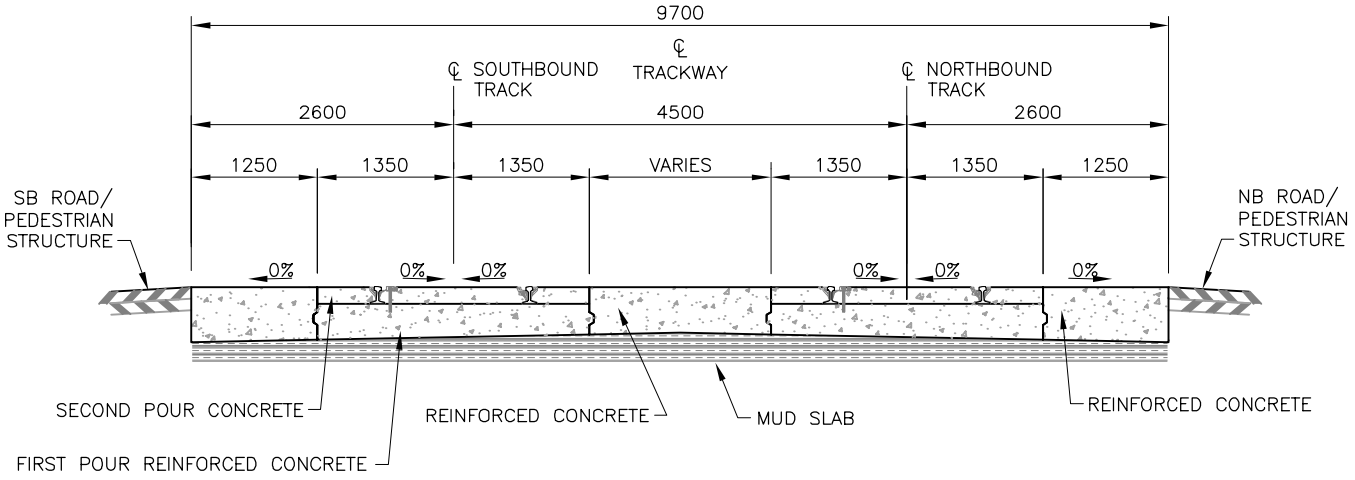

TYPICAL EMBEDDED TRACK WITH ANCHOR BOLTS ON CURVES

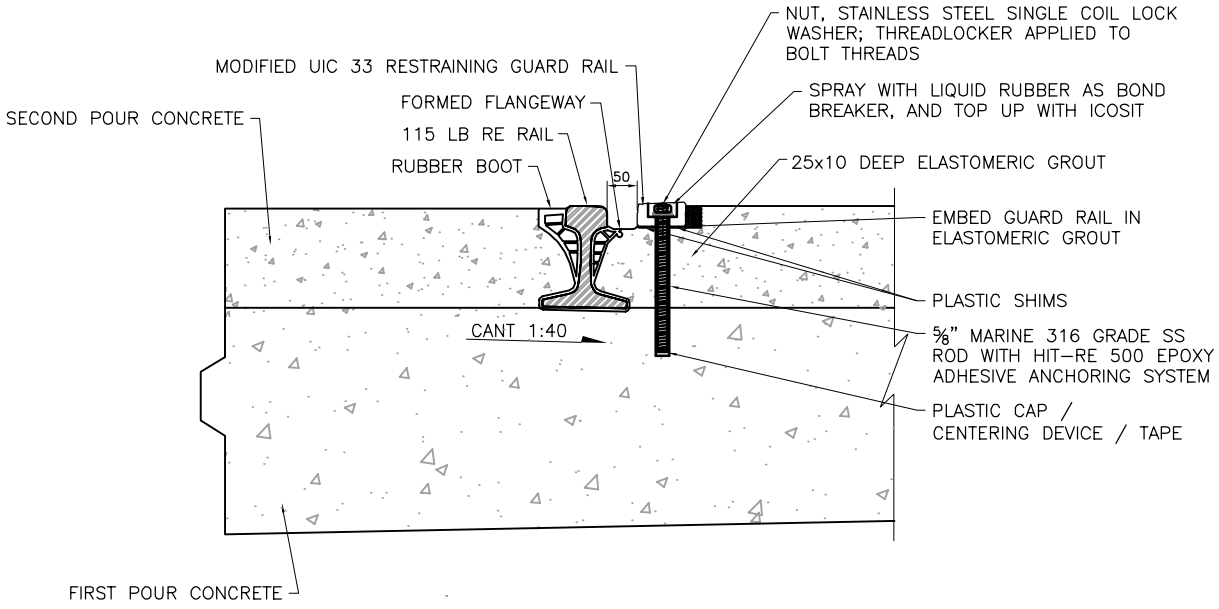

DETAIL USING GUARD RAIL ANCHOR BOLTS

GUARDED EMBEDDED TRACK ROAD/PEDESTRIAN CROSSING

		FIGURE 5.12F	CHAPTER 5
		TYPICAL EMBEDDED TRACK WITH GUARD RAIL AND ANCHOR BOLTS	TRACKWORK
28-JUN-16	NEW		
DATE	REVISION		

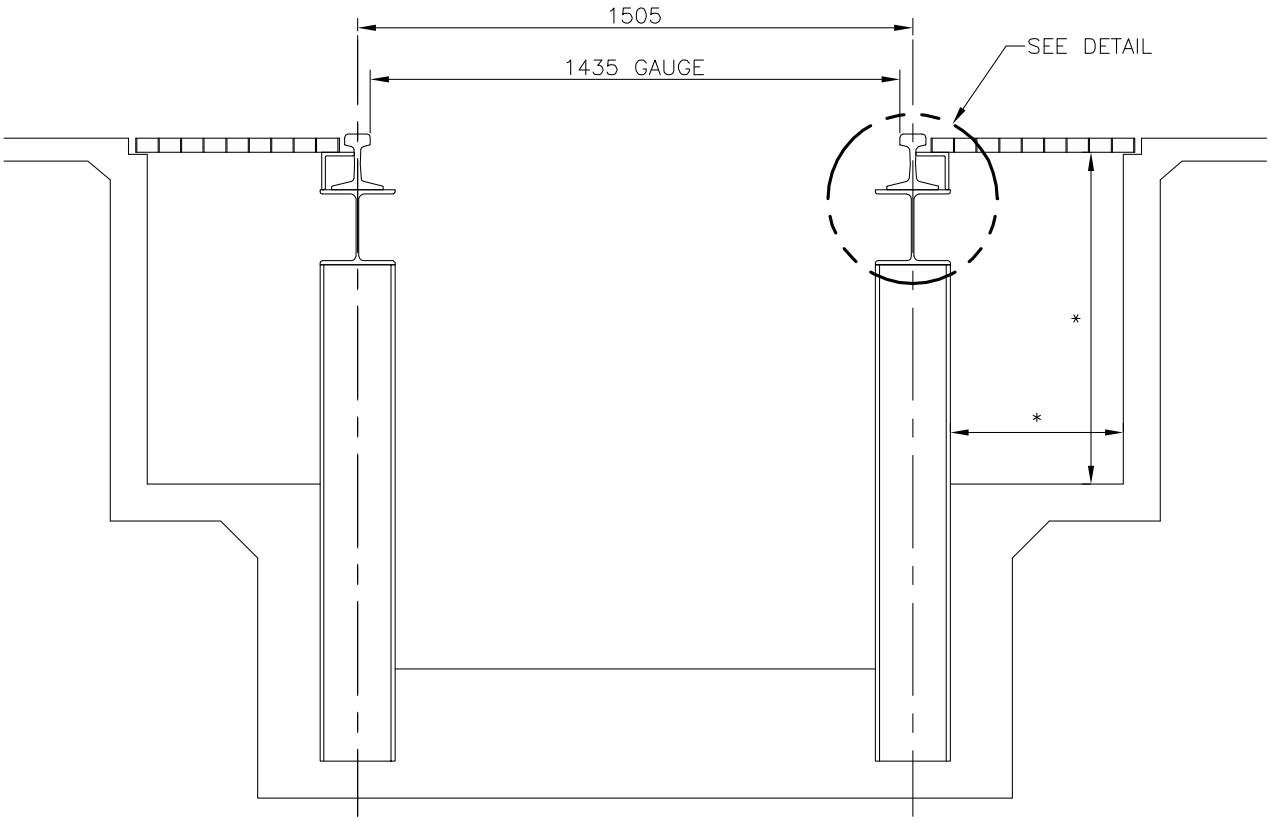

SECTION

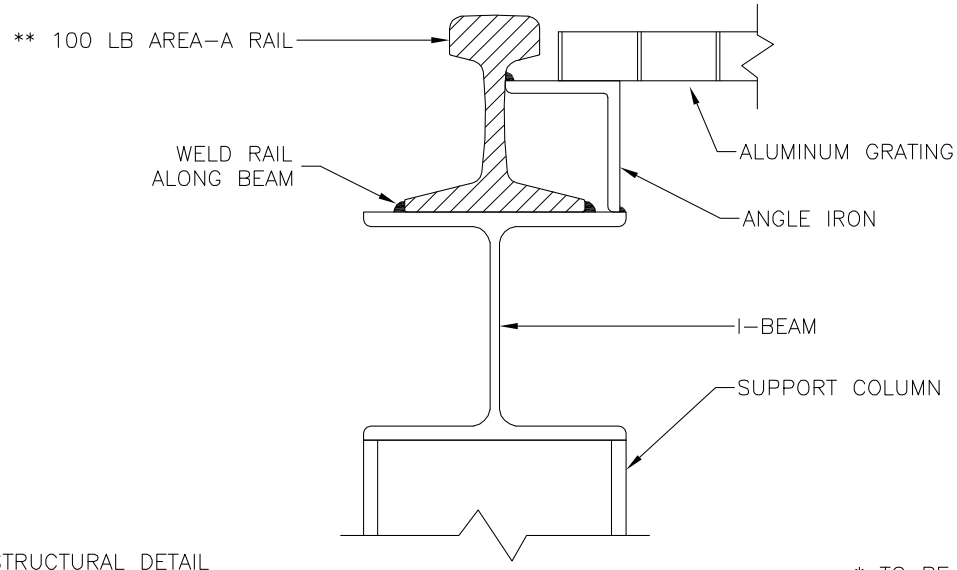

DETAIL

NOTE:
LOADINGS/STRUCTURAL DETAIL TO BE DETERMINED BY STRUCTURAL CONSULTANT AND CONFIRMED BY E.T.S.

* TO BE DETERMINED
**INSTALLED AT D.L. MACDONALD YARDS

		FIGURE 5.13	CHAPTER 5
		TYPICAL RAIL BEAM PIT TRACK	TRACKWORK
DATE	REVISION		

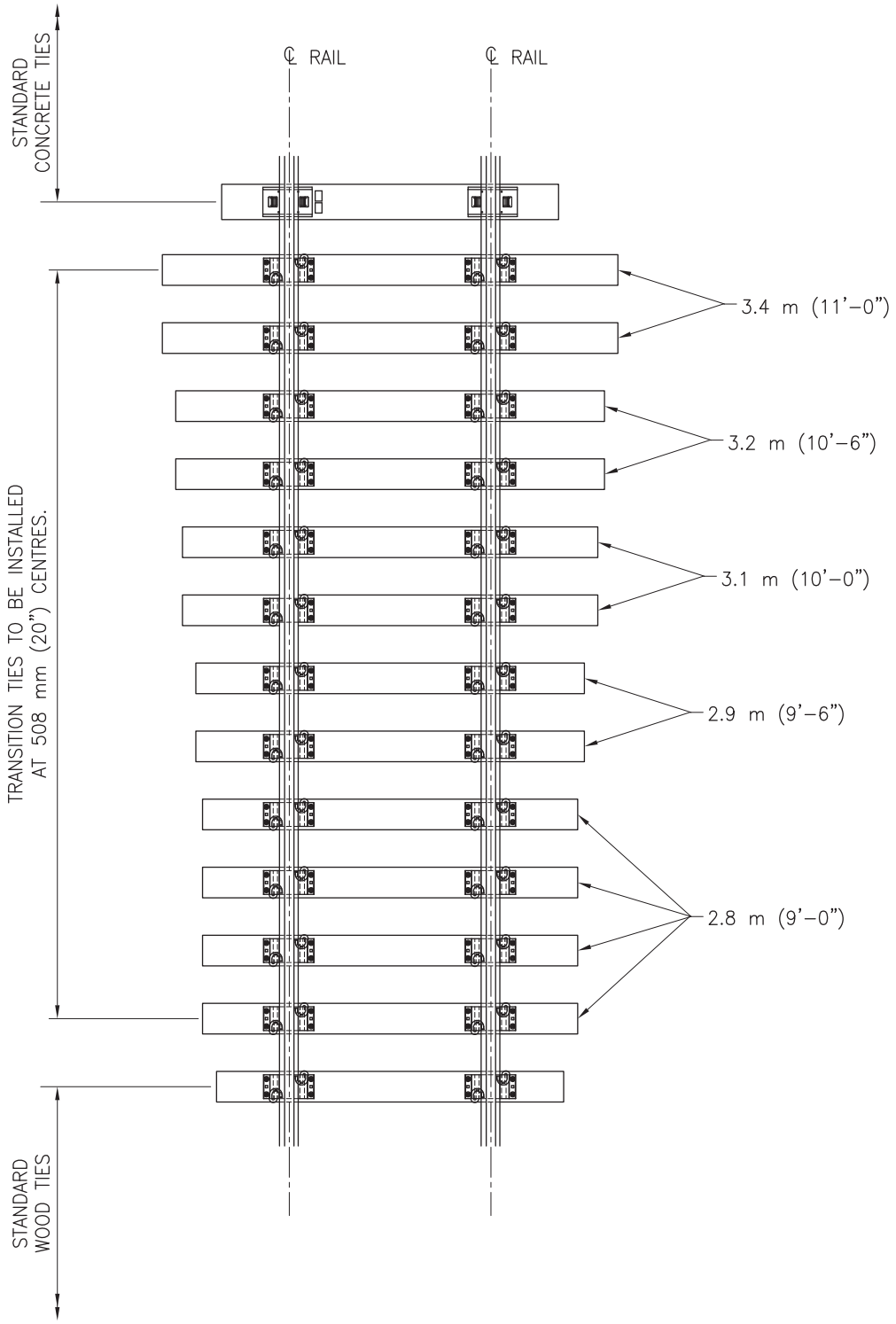

		FIGURE 5.14 TYPICAL TRANSITION TIE LAYOUT	CHAPTER 5 TRACKWORK
DATE	REVISION		

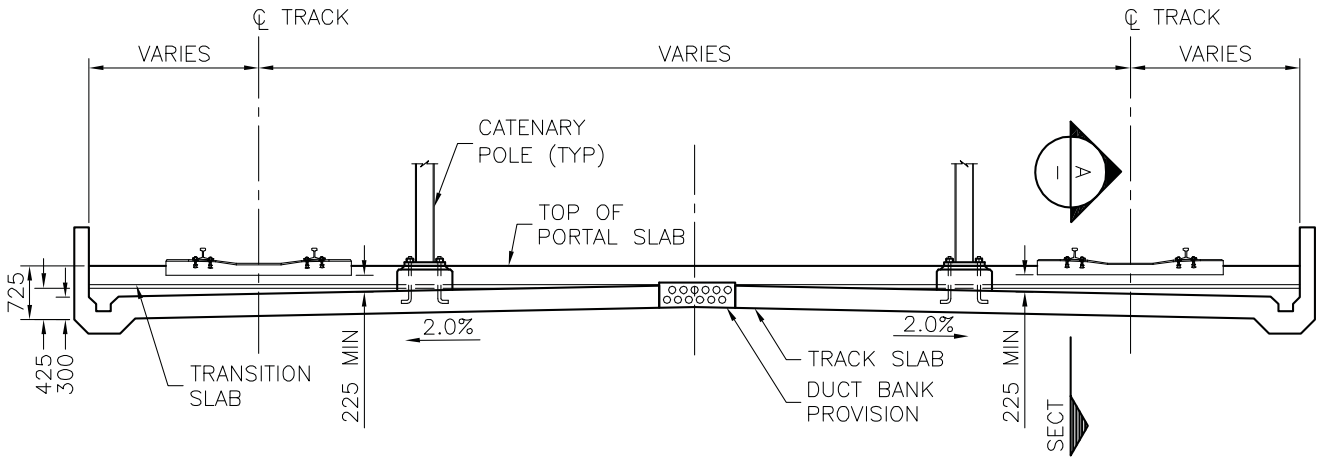

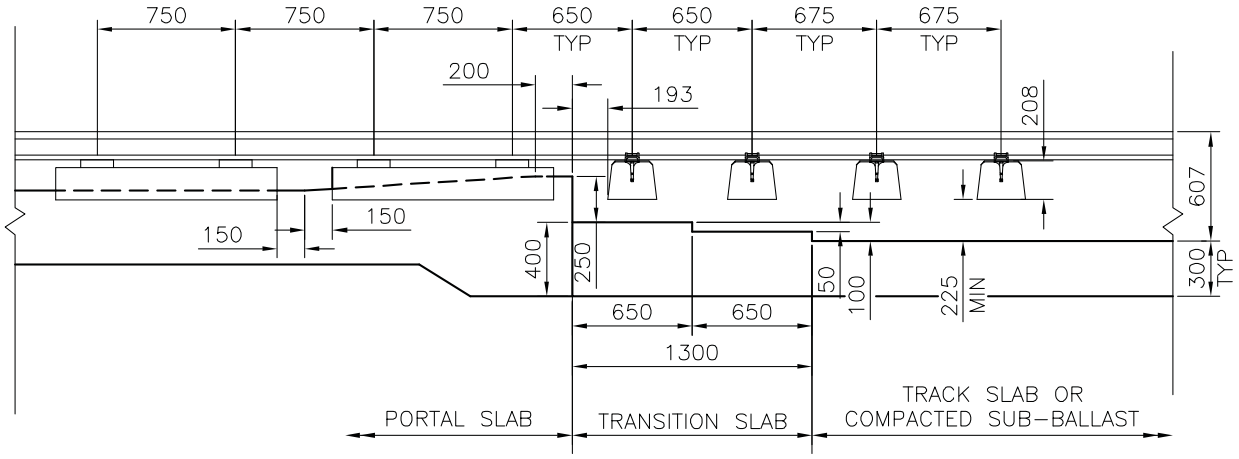

A – SECTION

		FIGURE 5.15 TYPICAL TRANSITION SLAB DETAILS	CHAPTER 5 TRACKWORK
DATE	REVISION		

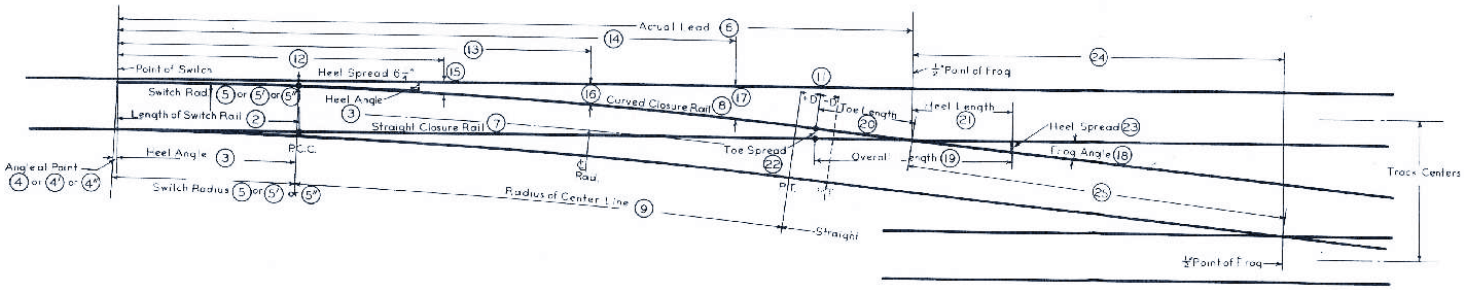

TURNOUT AND CROSSOVER DATA

	Properties of Curved Switches									Closure Distance		Lead Curve			Gage Line Offsets						Properties of Frogs							Data for Crossover: 13'-0" Track Centers		For change of 1'-0" in Track Centers	
	Col. (1)	Col. (2)	Col. (3)	Col. (4)	Col. (5)	Col. (4')	Col. (5')	Col. (4")	Col. (5")	Col. (6)	Col. (7)	Col. (8)	Col. (9)	Col. (10)	Col. (11)	Col. (12)	Col. (13)	Col. (14)	Col. (15)	Col. (16)	Col. (17)	Col. (1)	Col. (18)	Col. (19)	Col. (20)	Col. (21)	Col. (22)	Col. (23)	Col. (24)	Col. (25)		
	Frog Number	Length of Switch Rail	Heel Angle	Point 0" Thick Angle at Point PT. DETAIL NO. 3000	Switch Radius PT. DETAIL NO. 3000	Point ⅜" Thick Angle at Point PT. DETAIL NO. 6000	Switch Radius PT. DETAIL NO. 6000	Point ½" Thick Angle at Point PT. DETAIL NO. 4000	Switch Radius PT. DETAIL NO. 4000	Actual Lead	Straight Closure Rail	Curved Closure Rail	Radius of Center Line	Degree of Curve	Distance D						Frog Number	Frog Angle	Overall Length	Toe Length	Heel Length	Toe Spread	Heel Spread	Straight Track	Crossover Track	Straight Track	Crossover Track
		Ft. In.	Deg.Min.Sec.	Deg.Min.Sec.	Feet	Deg.Min.Sec.	Feet	Deg.Min.Sec.	Feet	Ft. In.	Ft. In.	Ft. In.	Feet	Deg.Min.Sec.	Feet	Ft. In.	Ft. In.	Ft. In.	Inches	Inches	Ft. In.		Deg.Min.Sec.	Ft. In.	Ft. In.	Ft. In.	Inches	Inches	Ft. In.	Ft. In.	Ft. In.	Ft. In.
5	13-0	2-54-00	1-41-31	616.55	1-36-00	572.96	1-30-30	535.22	44-6 1/2	28-0	28-3 3/8	188.10	30-49-49	0.00	20-0	27-0	34-0	12 15/16	21	2-9 3/8	5	11-25-16	9-0	3 6 1/2	5-5 1/2	7 15/16	13 3/16	16-10 5/8	18-1 7/8	4-11 7/8	5-0 3/8
6	13-0	2-54-00	1-41-31	616.55	1-36-00	572.96	1-30-30	535.22	49-9	33-0	33-3 1/4	283.88	20-17-20	+0.17	21-3	29-6	37-9	12 11/16	22 1/16	2-10 1/4	6	9-31-38	10-0	3 9	6-3	7	13	20-5 1/2	21-6 1/2	5-11 1/2	6-0 1/2
7	13-0	2-54-00	1-41-31	616.55	1-36-00	572.96	1-30-30	535.22	54-8 3/4	37-0	37-2 5/8	409.77	14-01-02	-0.68	22-0	31-0	40-0	12 13/16	21 5/16	2-9 1/4	7	8-10-15	12-0	4-8 1/2	7-3 1/2	7 3/16	13	24-0 3/4	24-11 3/8	6-11 3/8	7-0 7/16
8	13-0	2-54-00	1-41-31	616.55	1-36-00	572.96	1-30-30	535.22	58-11 5/8	40-10 1/8	41-0 [illegible]	550.75	10-25-03	0.00	23-3	33-6	43-9	13 3/16	23 5/16	2-11 3/8	8	7-09-10	13-0	5-1	7-11	7 5/16	12 3/8	27-7 5/8	28-4 7/8	7-11 5/8	8-0 3/8
9	19-6	1-59-15	1-04-24	1222.17	1-00-45	1145.92	0-57-04	1078.04	74-1 1/4	48-2 3/4	48-5	632.15	9-04-23	0.00	31-6	43-6	55-6	12 5/8	21 9/16	2-9 3/4	9	6-21-35	16-0	6-4 1/2	9-7 1/2	8	13 3/16	31-1 1/8	31-10 5/8	8-11 11/16	9-0 5/16
10	19-6	1-59-15	1-04-24	1222.17	1-00-45	1145.92	0-57-04	1078.04	78-11	53-0	53-2	806.09	7-06-45	+0.44	32-9	46-0	59-3	13 1/16	22 1/2	2-10 3/16	10	5-43-29	16-6	6-5	10-1	7 3/16	12 3/8	34-8 1/4	35-3 7/8	9-11 1/16	10-0 5/16
11	19-6	1-59-15	1-04-24	1222.17	1-00-45	1145.92	0-57-04	1078.04	83-6	57-0	57-1 5/8	1009.34	5-40-44	+0.34	33-9	48-0	62-3	13 3/8	22 15/16	2-10 5/8	11	5-12-18	18-6 1/2	7 0	11-8 1/2	7 1/8	13 1/4	38-2 1/2	38-9 1/2	10-11 3/4	11-0 1/4
12	19-6	1-59-15	1-04-24	1222.17	1-00-45	1145.92	0-57-04	1078.04	87-3 1/4	60-0	60-1 3/4	1205.02	4-45-22	+1.47	34-6	49-6	64-6	13 3/8	23 1/16	2-11 1/4	12	4-46-19	20-4	7-9 1/2	12-6 1/2	7 5/8	13 1/16	41-8 3/4	42-3 1/2	11-11 3/4	12-0 1/4
14	26-0	1-27-00	0-50-44	2464.55	0-48-00	2291.83	0-45-14	2140.01	108-7 1/2	74-0	74-1 1/8	1576.40	3-38-07	+1.36	44-6	63-0	81-6	13 1/2	22 5/8	2-10 3/4	14	4-05-27	23-7	8-7 1/2	14-11 1/2	6 5/8	13 5/8	48-9 1/4	49-2 13/16	13-11 3/16	14-0 5/16
15	26-0	1-27-00	0-50-44	2464.55	0-48-00	2291.83	0-45-14	2140.01	113-5	76-0	76-1 3/8	1872.90	3-03-34	+0.80	45-6	65-0	84-6	13 3/8	23	2-11	15	3-49-06	24-4 1/2	9-5	14-11 1/2	7	12 7/8	52-3 7/16	52-8 3/8	14-11 13/16	15-0 7/16
16	26-0	1-27-00	0-50-44	2464.55	0-48-00	2291.83	0-45-14	2140.01	118-5	83-0	83-1 1/4	2240.84	2-33-26	+0.27	46-9	67-6	88-3	13 11/16	23 1/2	2-11 3/8	16	3-34-47	26-0	9-5	16-7	6 3/8	12 15/16	55-9 5/8	56-2 1/2	15-11 13/16	16-0 3/16
18	39-0	1-04-30	0-27-19	3605.70	0-25-30	3437.74	0-23-39	3282.02	147-0 3/8	97-0	97-1 3/16	2622.45	2-11-06	+0.56	63-3	87-6	111-9	13 15/16	22 7/8	2-10 3/4	18	3-10-56	29-3	11-0 1/2	18-2 1/2	6 7/8	12 5/8	62-9 1/4	63-2 3/4	17-11 3/4	18-0 1/4
20	39-0	1-04-30	0-27-19	3605.70	0-25-30	3437.74	0-23-39	3282.02	156-0 1/2	106-0	106-1	3329.91	1-43-15	+2.03	65-6	92-0	118-6	13 7/8	23 1/4	2-11 3/8	20	2-51-51	30-10 1/2	11-0 1/2	19-10	6 1/8	12 3/8	69-10	70-2	19-11 7/8	20-0 1/8

FIGURE 5.16

TURNOUT AND CROSSOVER DATA
FOR CURVED SPLIT SWITCHES
AREMA STANDARD

DATE	REVISION

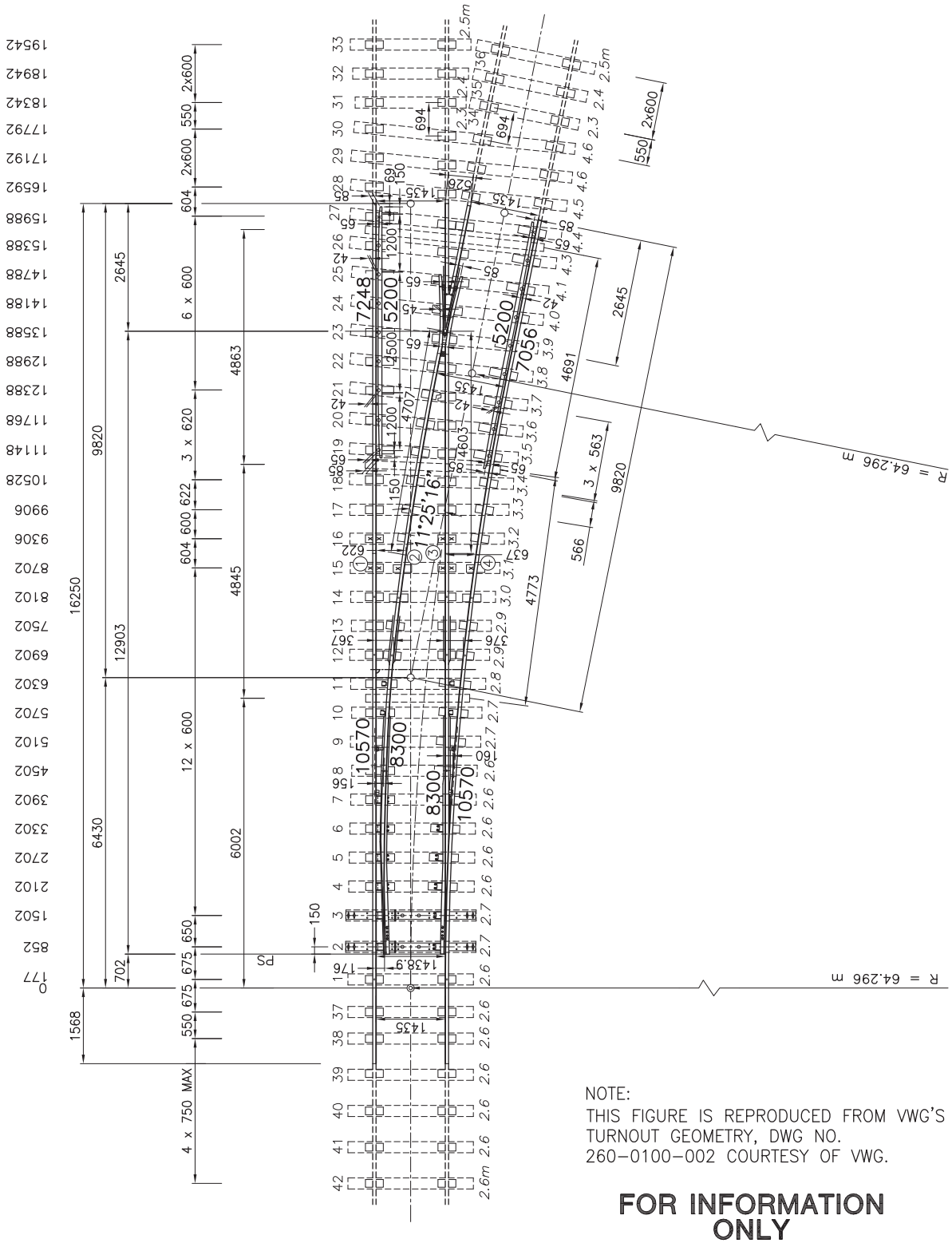

NOTE:
THIS FIGURE IS REPRODUCED FROM VWG'S TURNOUT GEOMETRY, DWG NO. 260-0100-002 COURTESY OF VWG.

FOR INFORMATION ONLY

		FIGURE 5.17 NO. 5 TURNOUT UIC STANDARD	CHAPTER 5 TRACKWORK
DATE	REVISION		

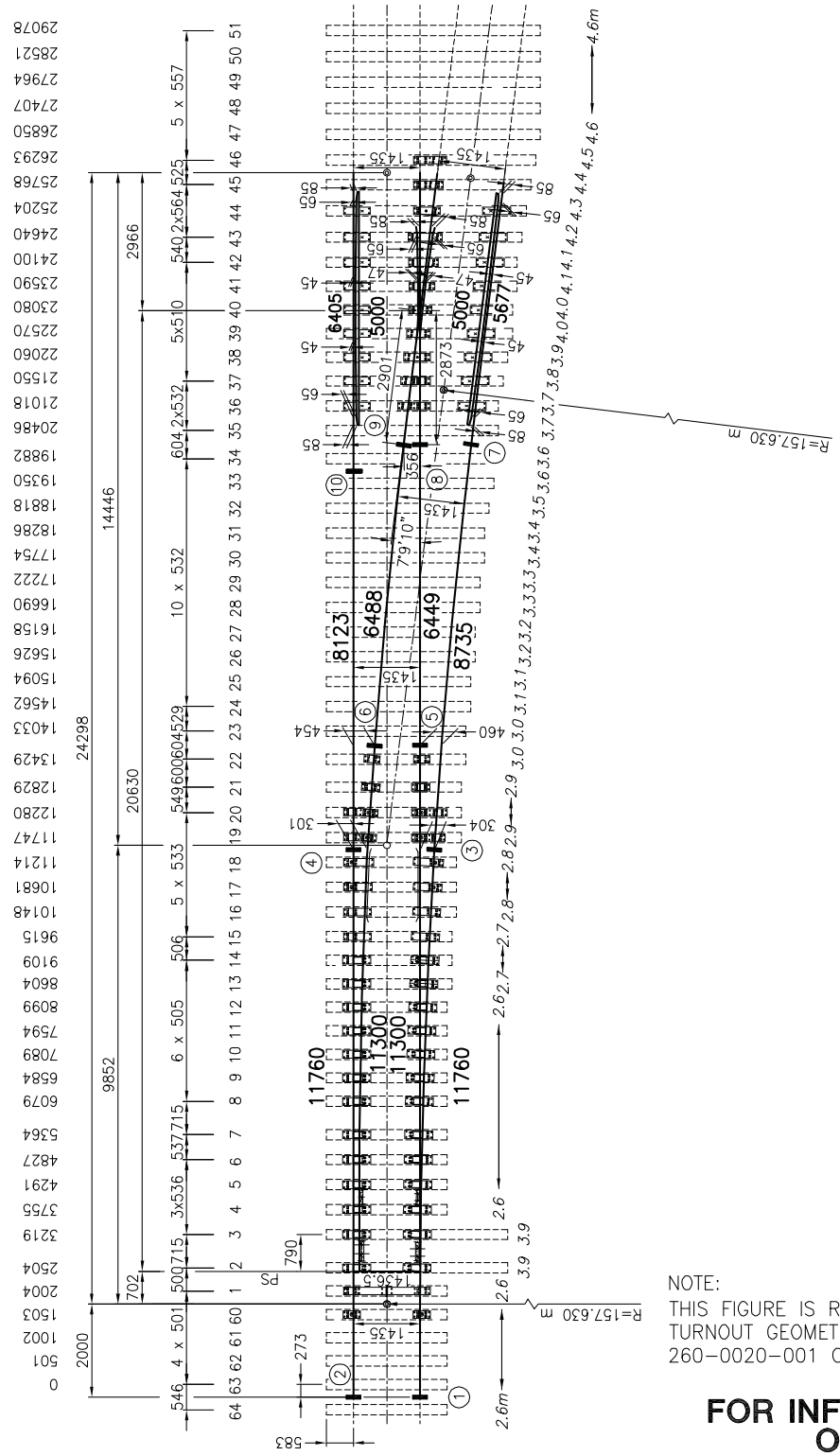

NOTE:
THIS FIGURE IS REPRODUCED FROM VWG'S TURNOUT GEOMETRY, DWG NO. 260-0020-001 COURTESY OF VWG.

FOR INFORMATION ONLY

		FIGURE 5.18 NO. 8 TURNOUT UIC STANDARD	CHAPTER 5 TRACKWORK
DATE	REVISION		

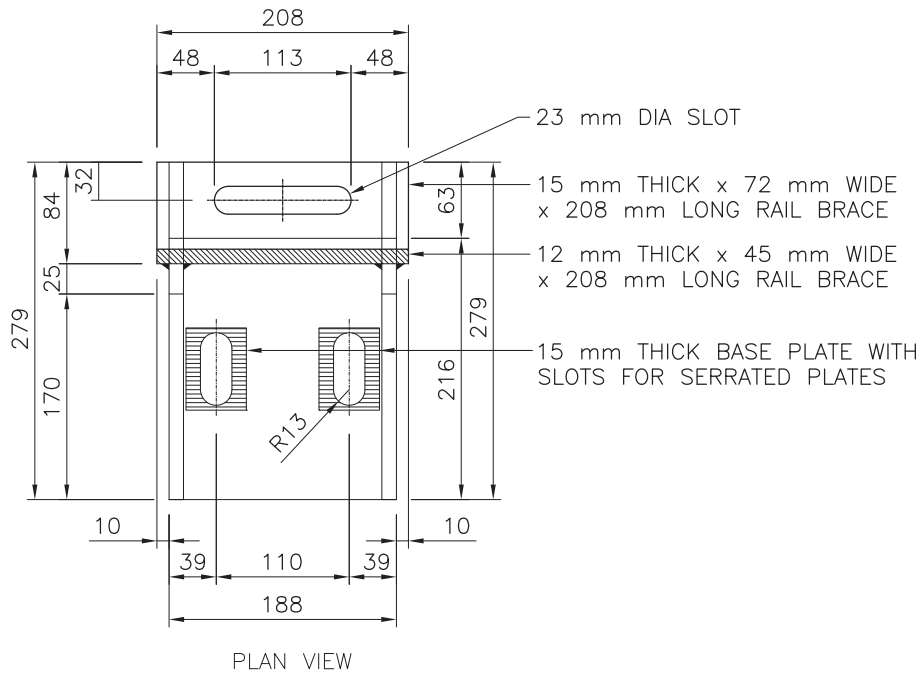

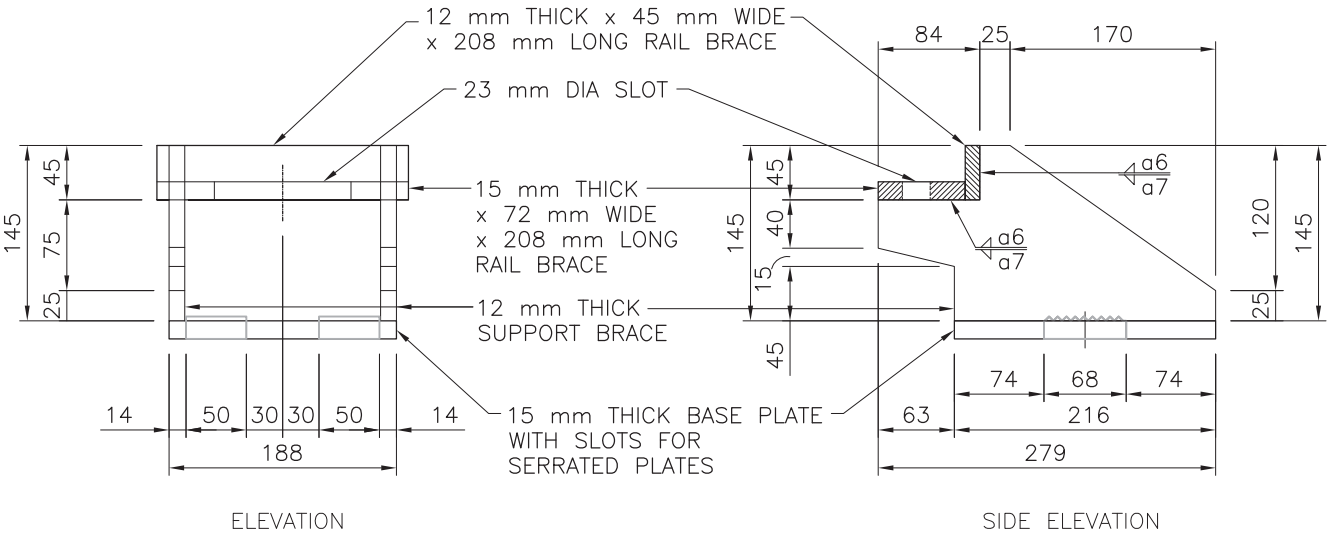

		FIGURE 5.19A TYPE–1 GUARD RAIL MOUNTING BRACKET FOR EMBEDDED TRACK	CHAPTER 5 TRACKWORK
30–JUN–11	NEW		
DATE	REVISION		

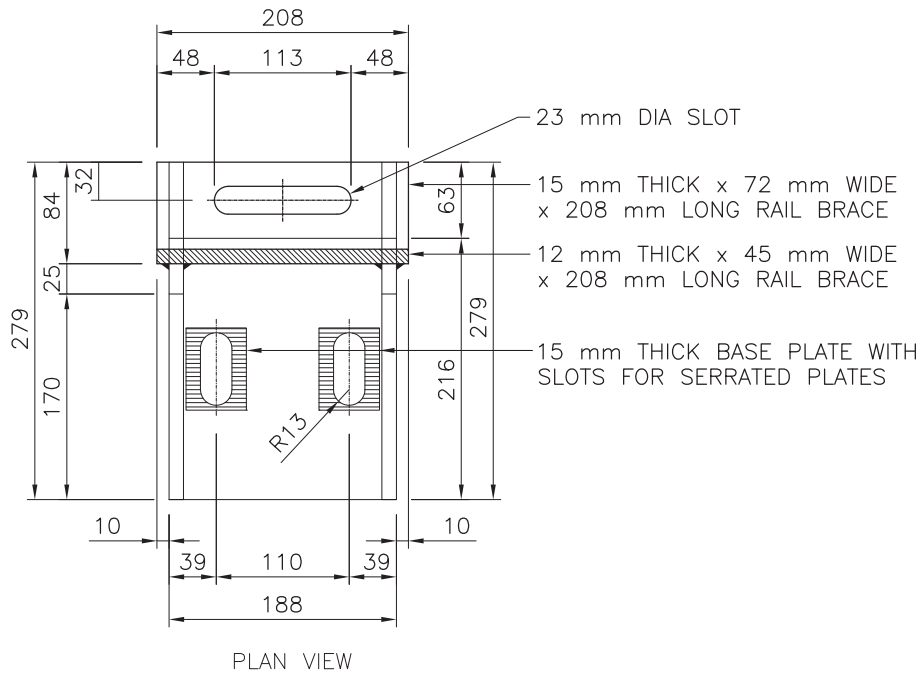

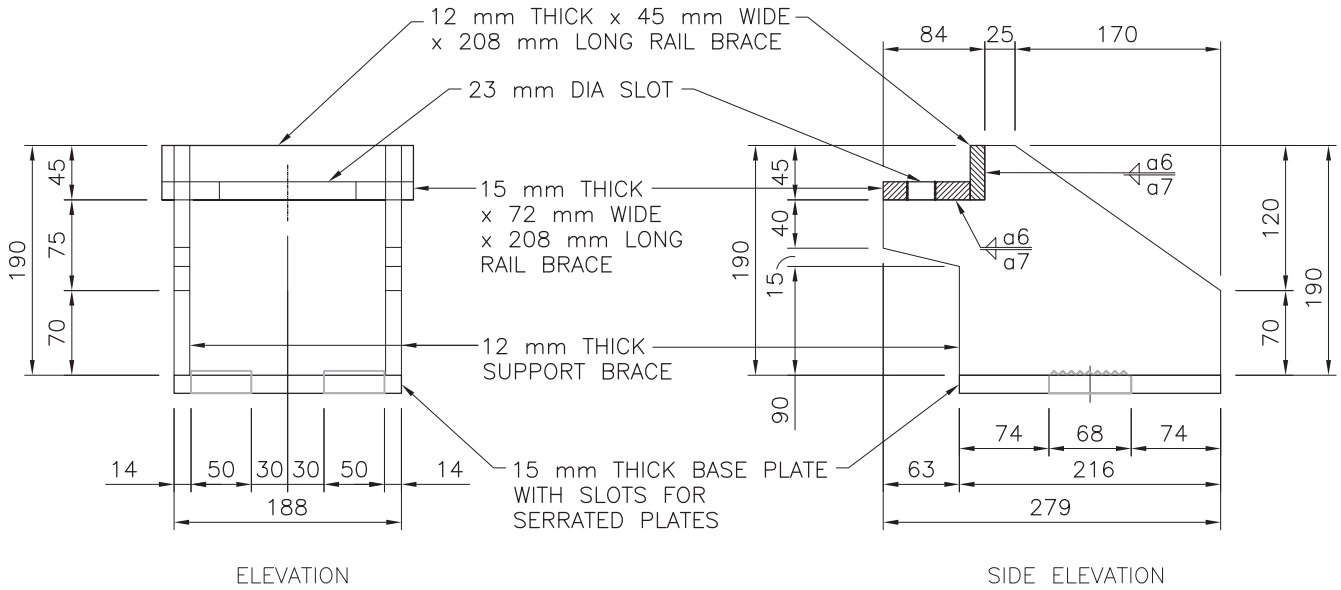

		FIGURE 5.19B TYPE–2 GUARD RAIL MOUNTING BRACKET FOR DIRECT FIXATION	CHAPTER 5 TRACKWORK
30–JUN–11	NEW		
DATE	REVISION		

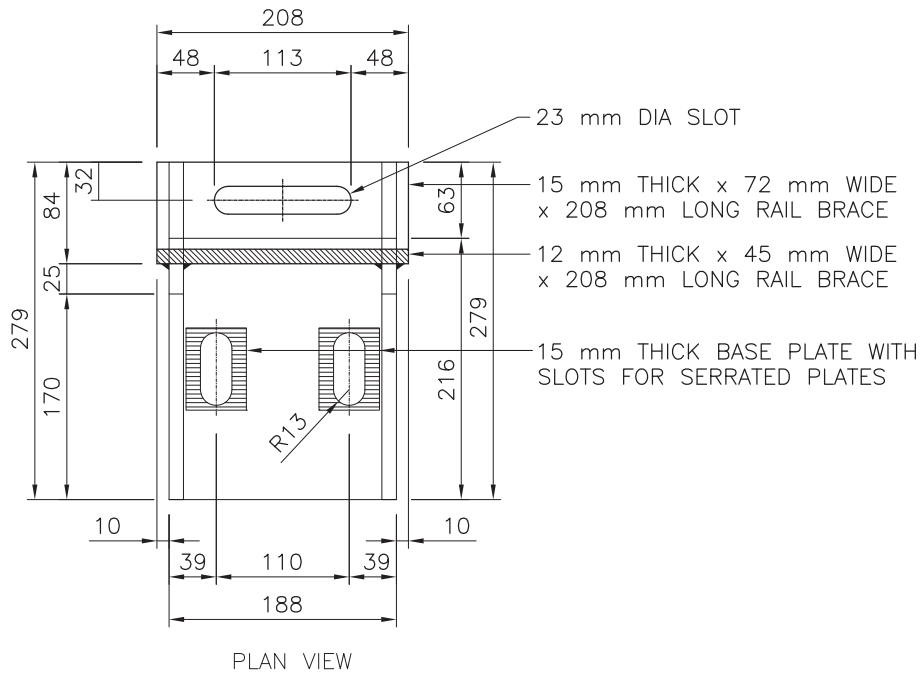

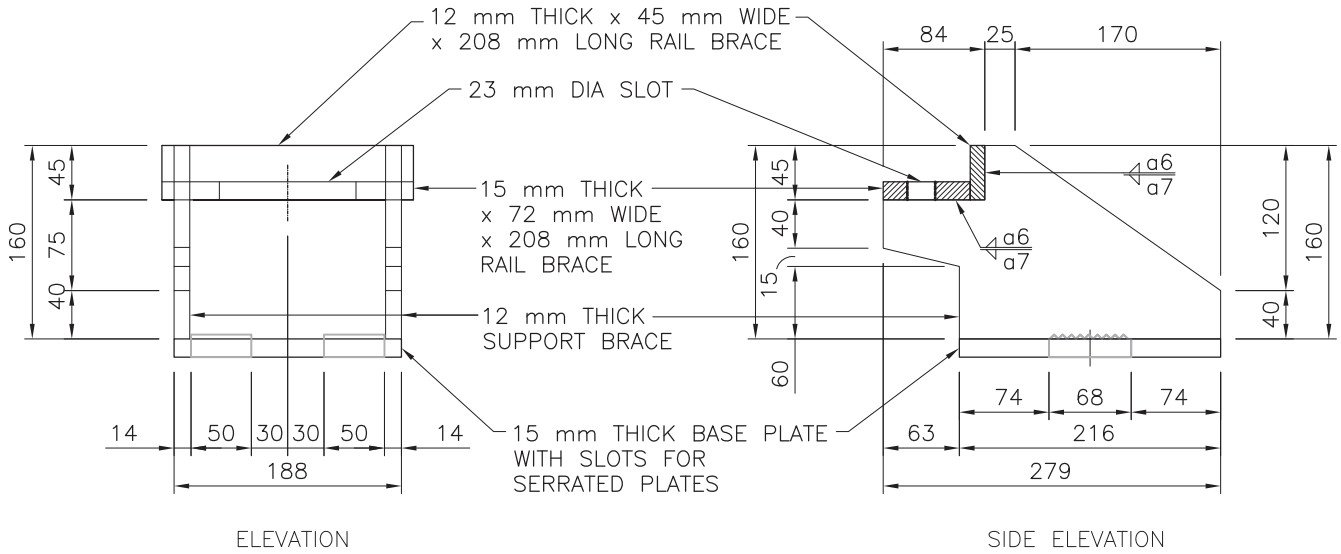

		FIGURE 5.19C TYPE–3 GUARD RAIL MOUNTING BRACKET FOR WOOD TIE	CHAPTER 5 TRACKWORK
30–JUN–11	NEW		
DATE	REVISION		

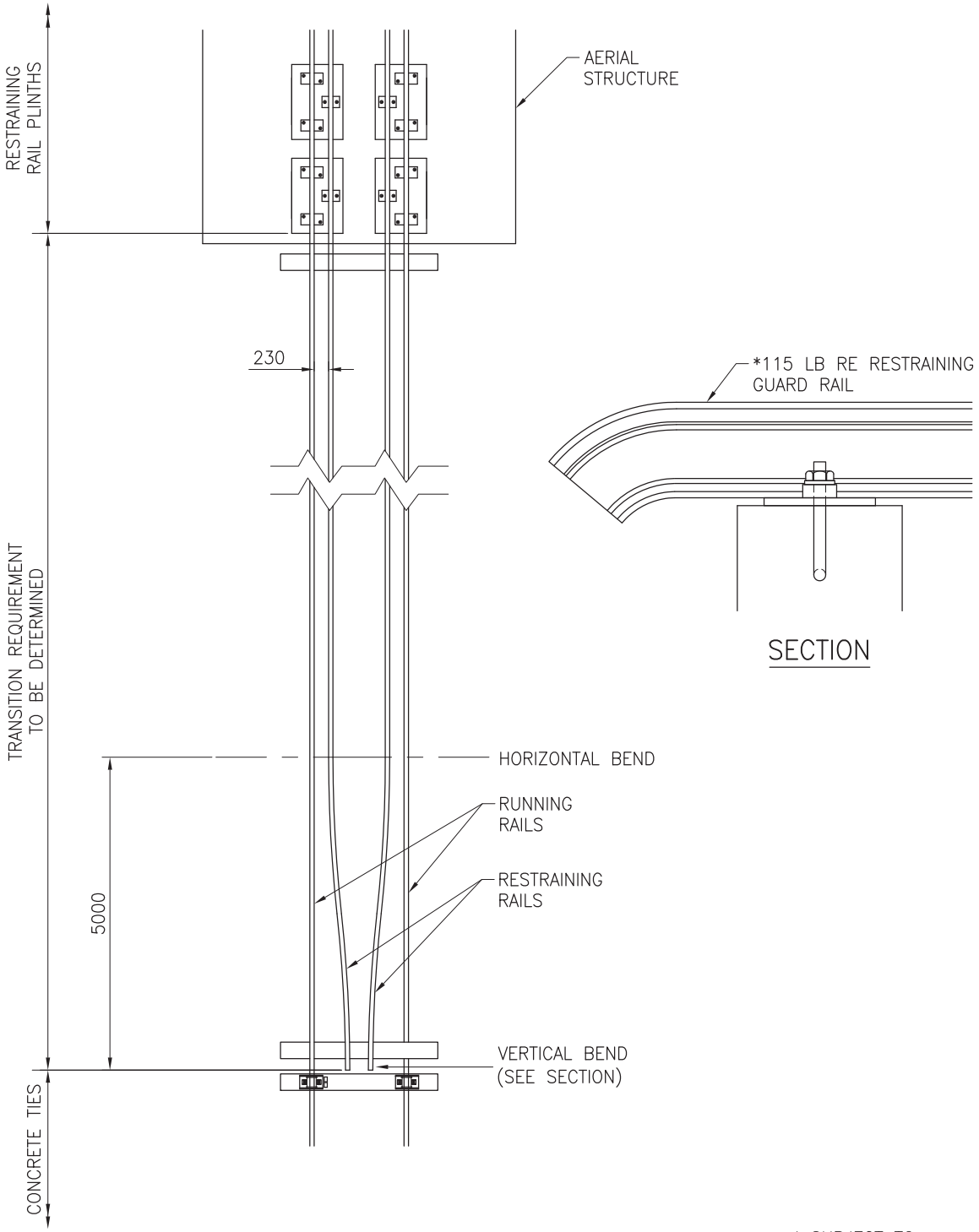

* SUBJECT TO AVAILABILITY

		FIGURE 5.20A TYPICAL RESTRAINING RAIL LAYOUT PLAN	CHAPTER 5 TRACKWORK
30–JUN–11	TITLE CHANGE		
DATE	REVISION		

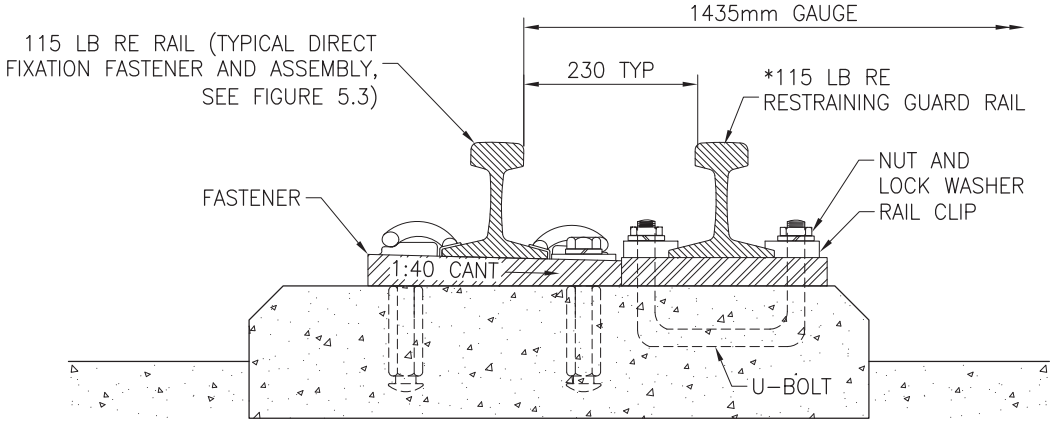

DIRECT FIXATION TO CONCRETE DECK

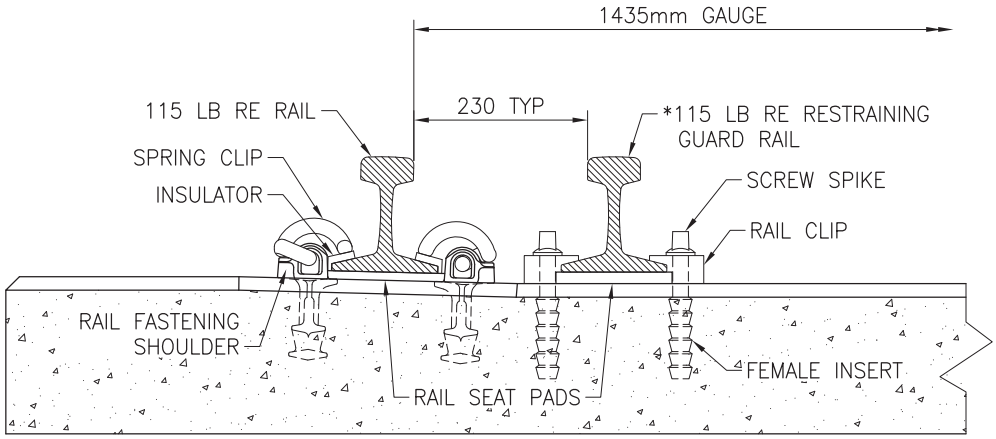

BALLASTED TRACK

* SUBJECT TO AVAILABILITY

		FIGURE 5.20B TYPICAL RESTRAINING GUARD RAIL FASTENERS	CHAPTER 5 TRACKWORK
30-JUN-11	TITLE CHANGE		
DATE	REVISION		

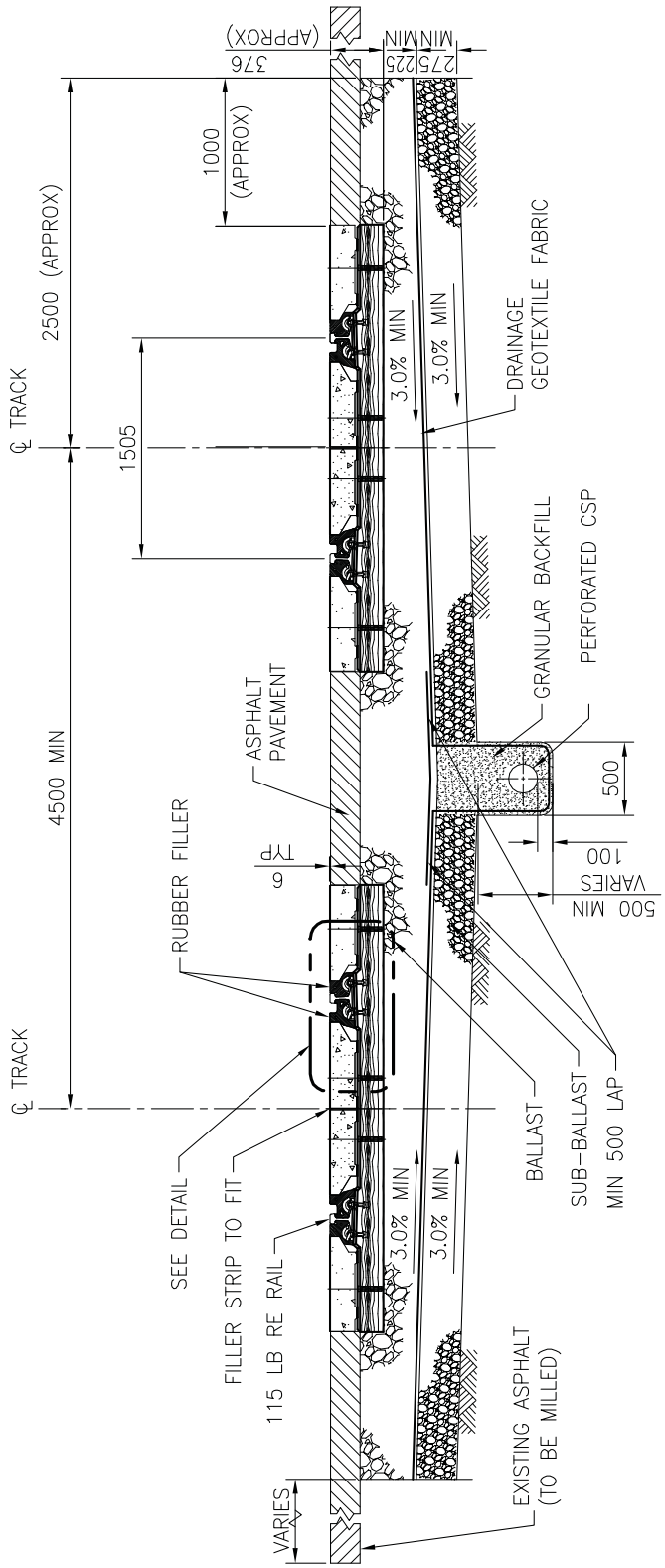

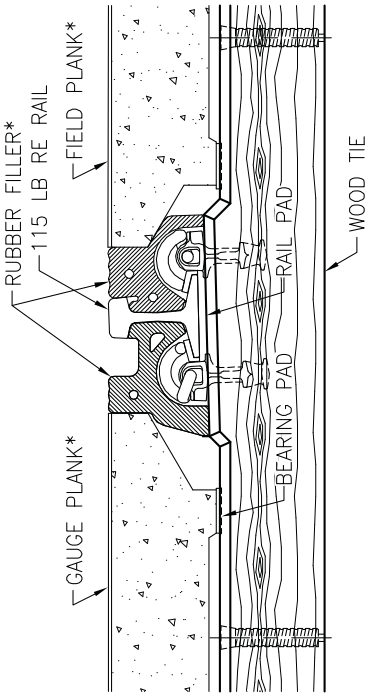

* DENOTES DIMENSIONS ARE SUBJECT TO MANUFACTURER'S SPECIFICATIONS.

		FIGURE 5.21 TYPICAL AT–GRADE ROAD CROSSING	CHAPTER 5 TRACKWORK
DATE	REVISION		

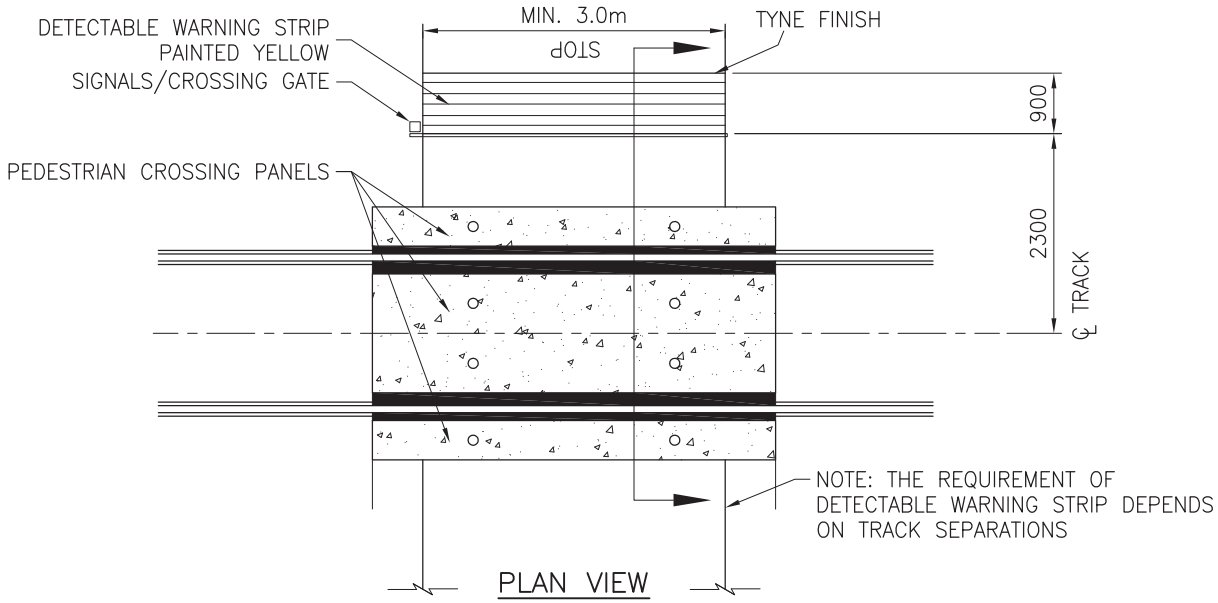

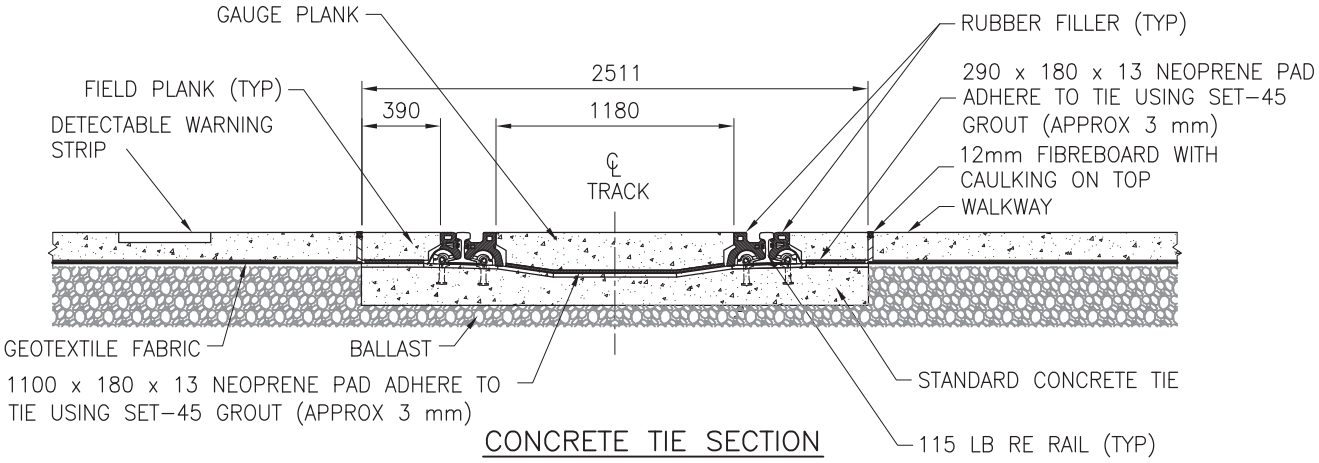

CONCRETE TIE SECTION

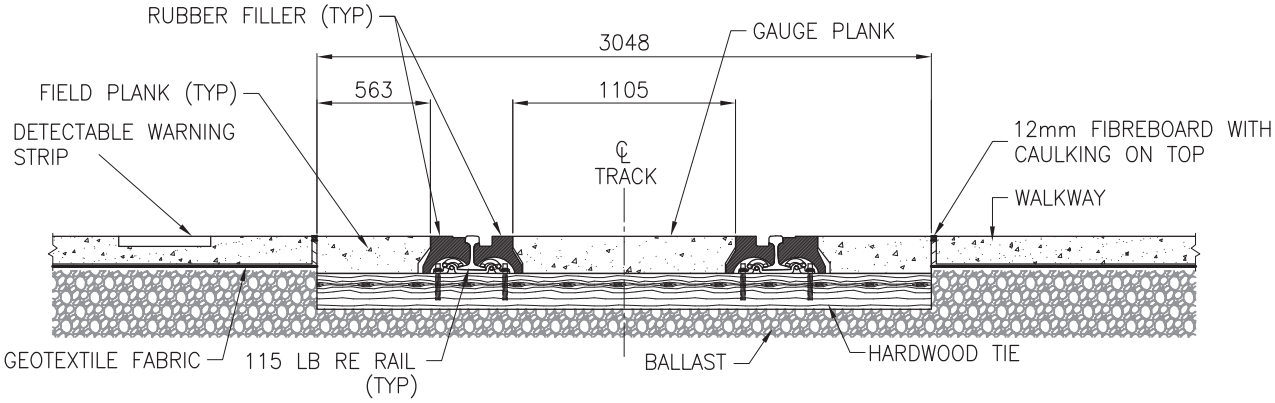

WOOD TIE SECTION

		FIGURE 5.22A TYPICAL AT-GRADE PEDESTRIAN CROSSING	CHAPTER 5 TRACKWORK
30-JUN-11	TITLE CHANGE		
DATE	REVISION		

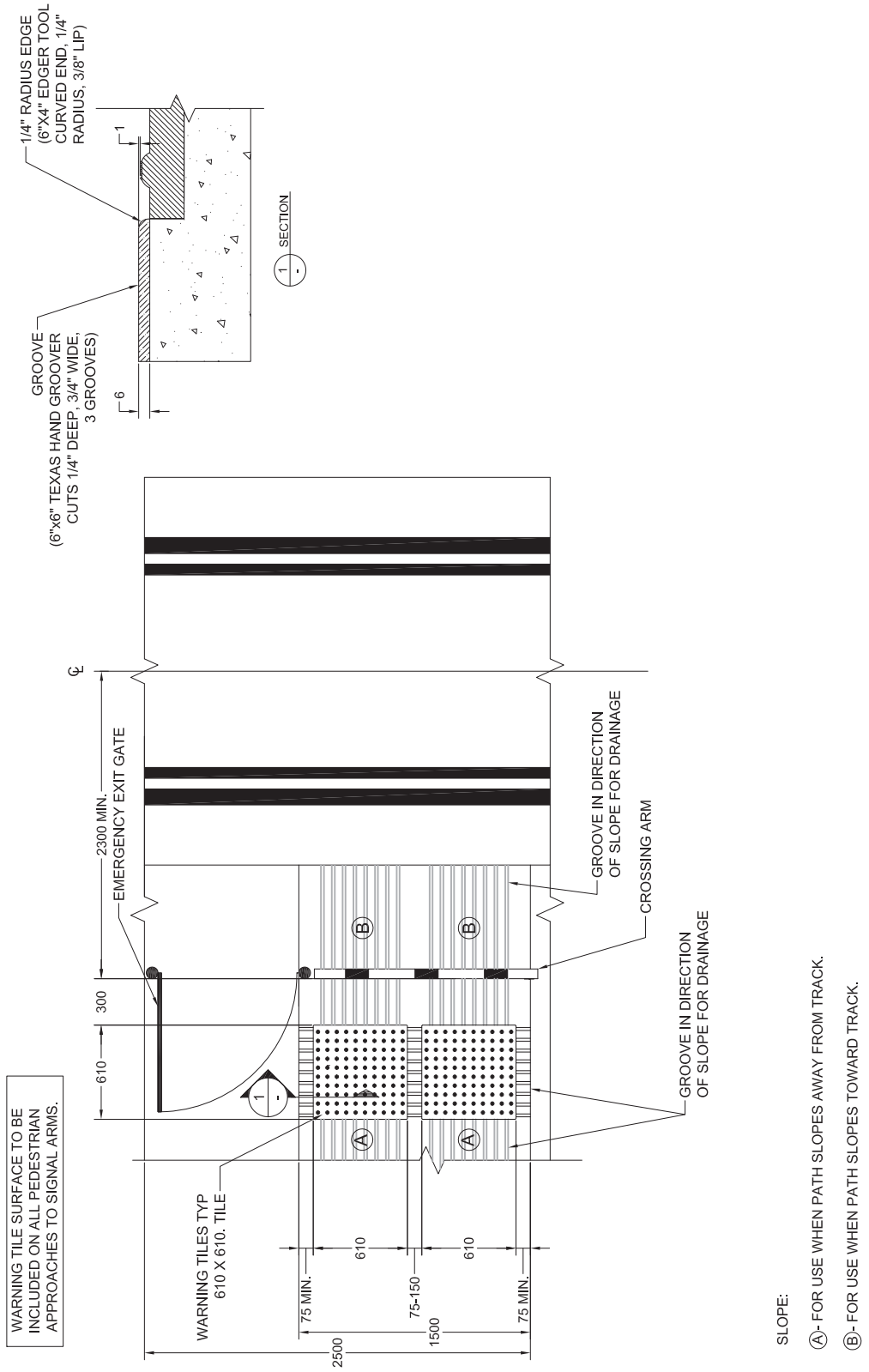

		FIGURE 5.22B DETECTABLE WARNING SURFACE 2500 mm PEDESTRIAN CROSSING	CHAPTER 5 TRACKWORK
30–JUN–11	NEW		
DATE	REVISION		

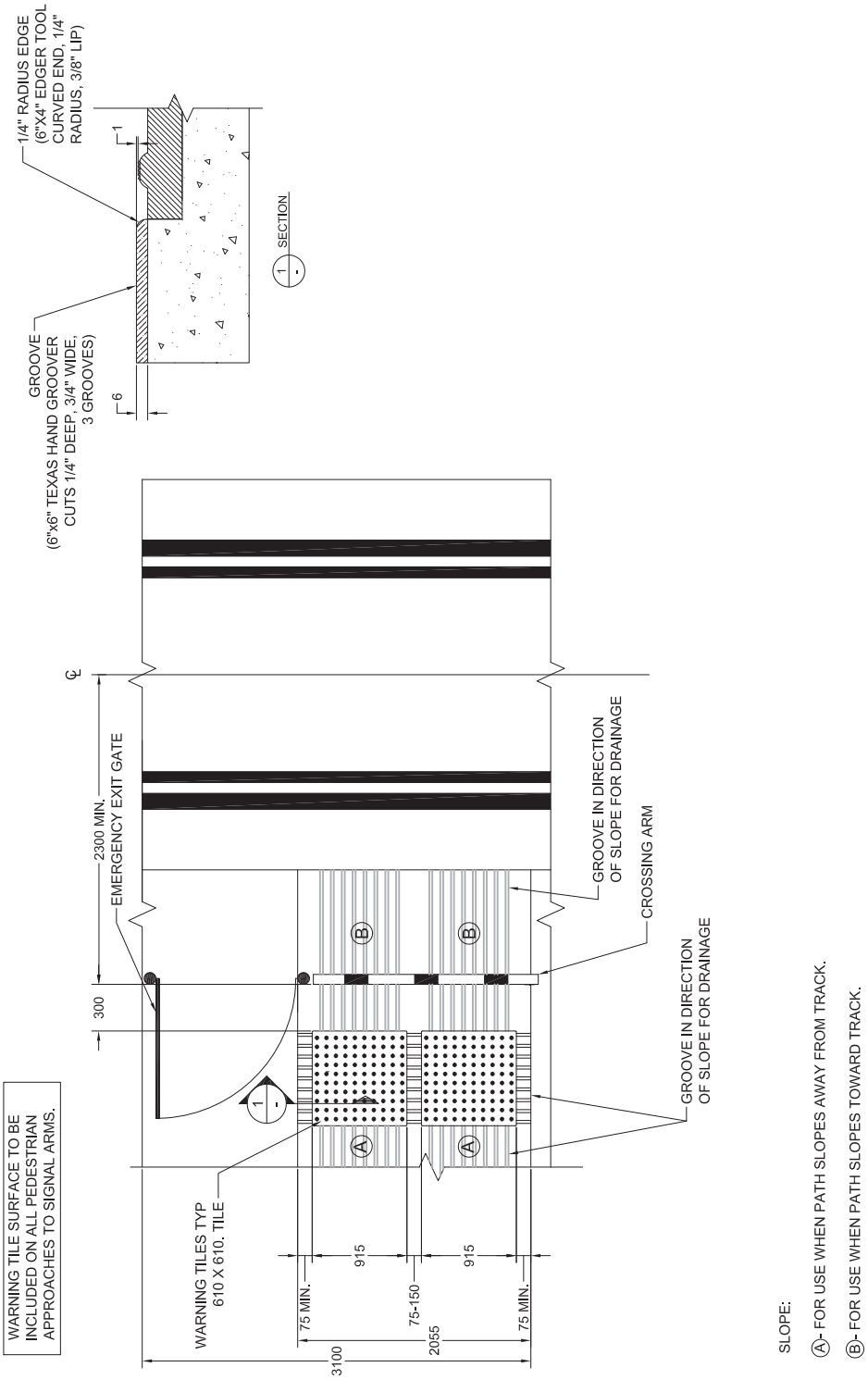

		FIGURE 5.22C DETECTABLE WARNING SURFACE 3100 mm PEDESTRIAN CROSSING	CHAPTER 5 TRACKWORK
30-JUN-11	NEW		
DATE	REVISION		

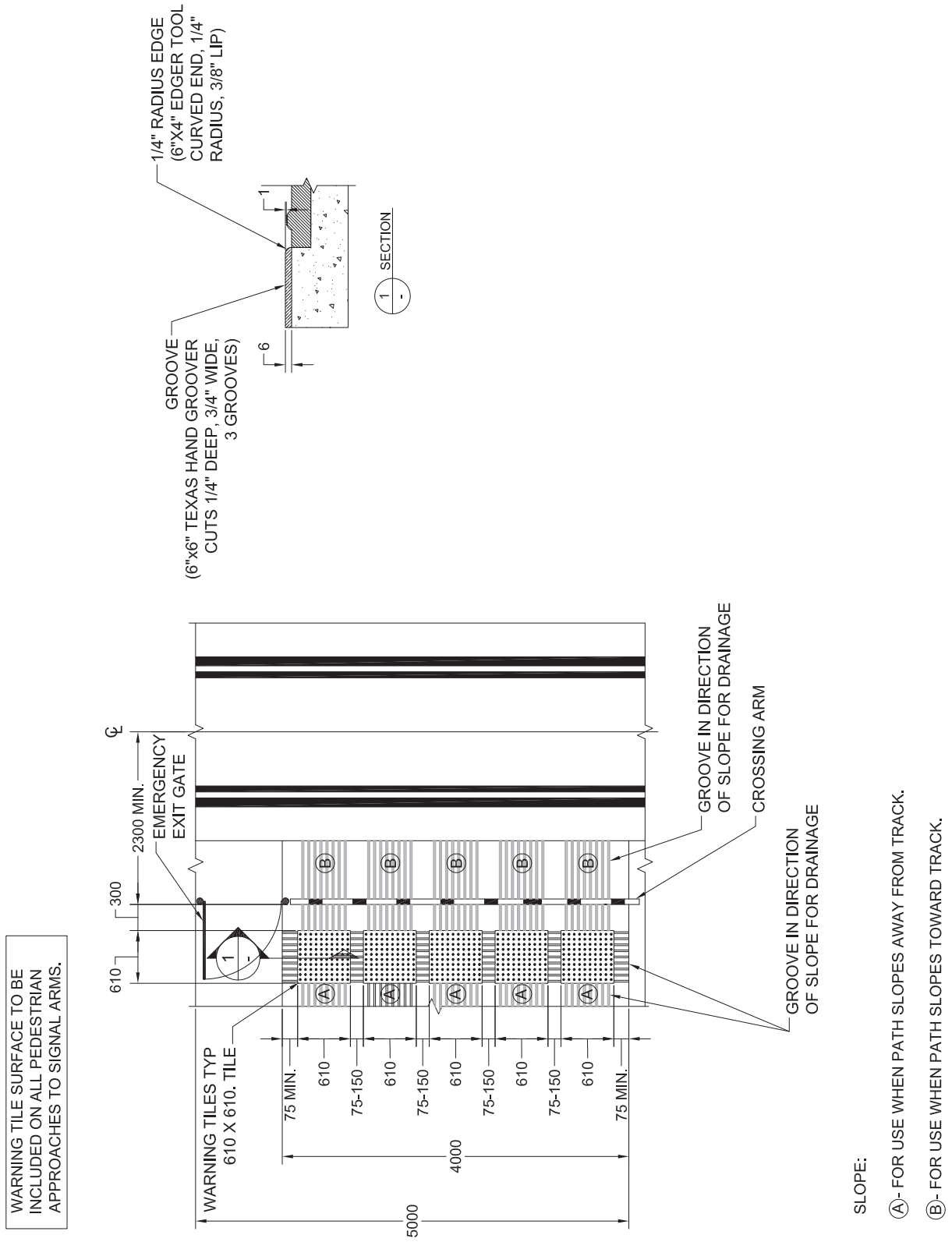

		FIGURE 5.22D DETECTABLE WARNING SURFACE 5000 mm PEDESTRIAN CROSSING	CHAPTER 5 TRACKWORK
30–JUN–11	NEW		
DATE	REVISION		

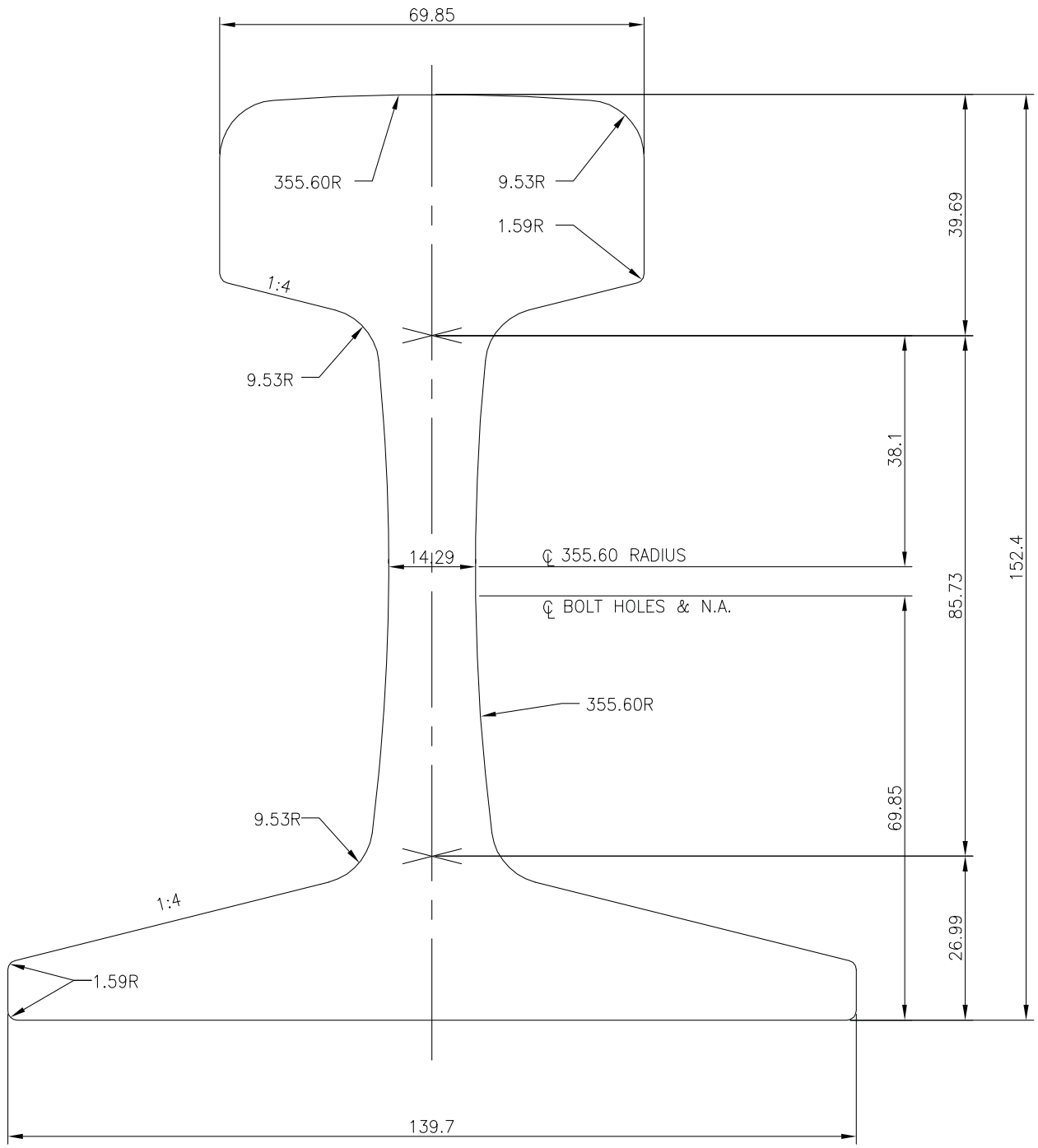

		FIGURE 5.23 A	CHAPTER 5
		100 LB ARA–A RAIL	TRACKWORK
DATE	REVISION		

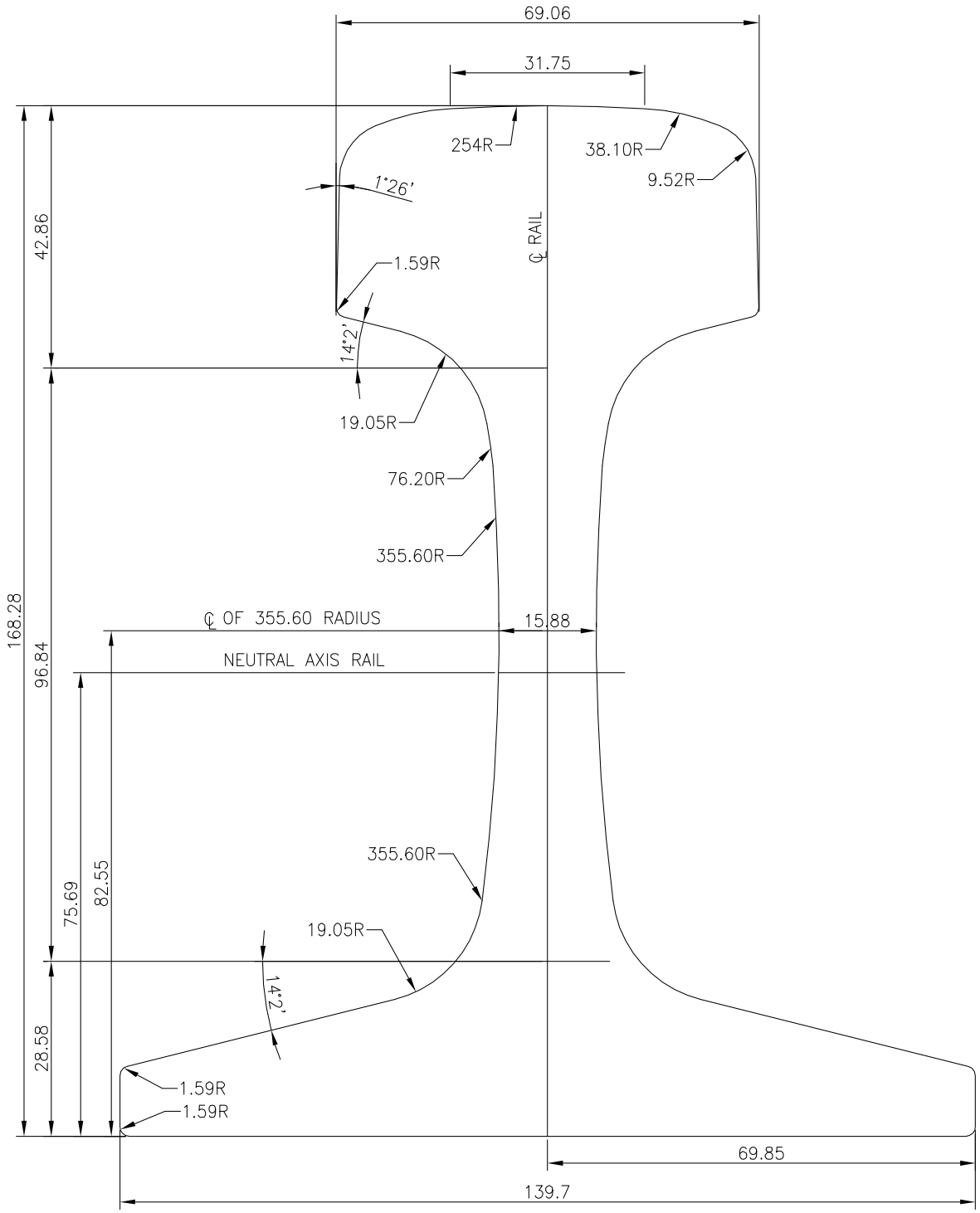

		FIGURE 5.23 B 115 LB RE RAIL	CHAPTER 5 TRACKWORK
DATE	REVISION		

Dimensions in millimetres

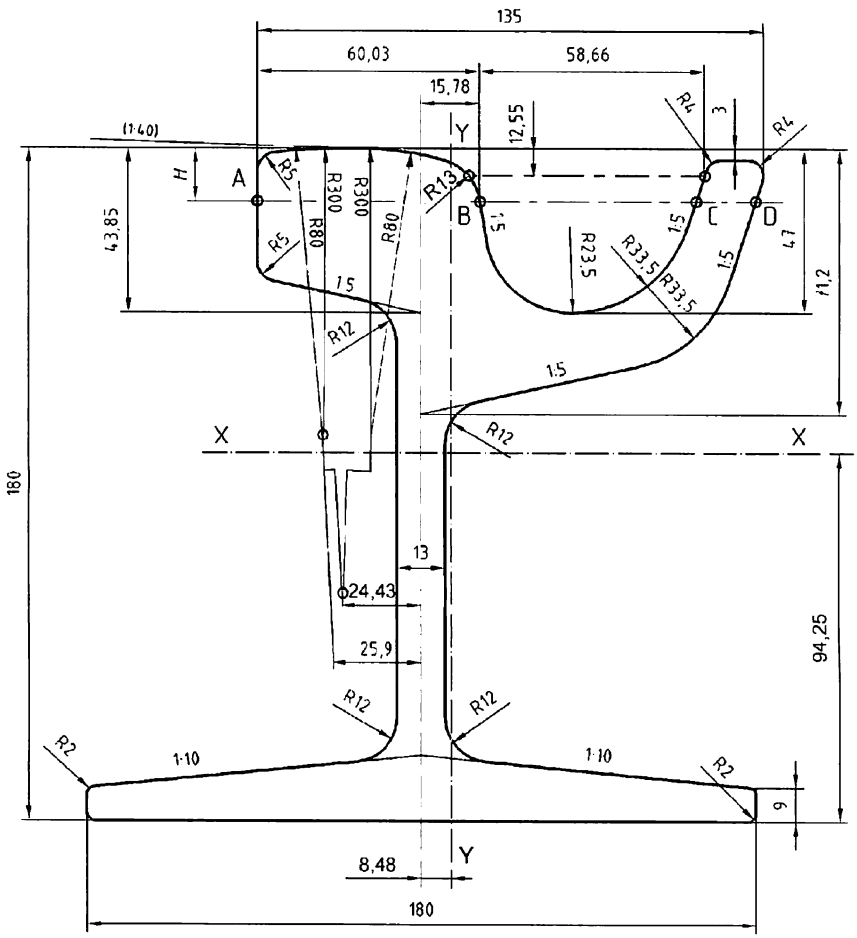

H	AB	BC	CD
9	58,85	60,55	15,28
10	59,29	59,91	15,28
14	60,32	58,08	15,28

Cross-sectional area: 85,04 cm^2
Linear mass: 66,76 kg/m
Moment of inertia I_{xx}: 3 554 cm^4
Moment of inertia I_{yy}: 1 250 cm^4
Section modulus W_{xf}: 360,8 cm^3
Section modulus W_{xh}: 436,0 cm^3
Section modulus W_{yh}: 132,6 cm^3
Section modulus W_{ygh}: 145,7 cm^3

		FIGURE 5.23C (67R1) GIRDER RAIL	CHAPTER 5 TRACKWORK
30–JUN–11	NEW		
DATE	REVISION		

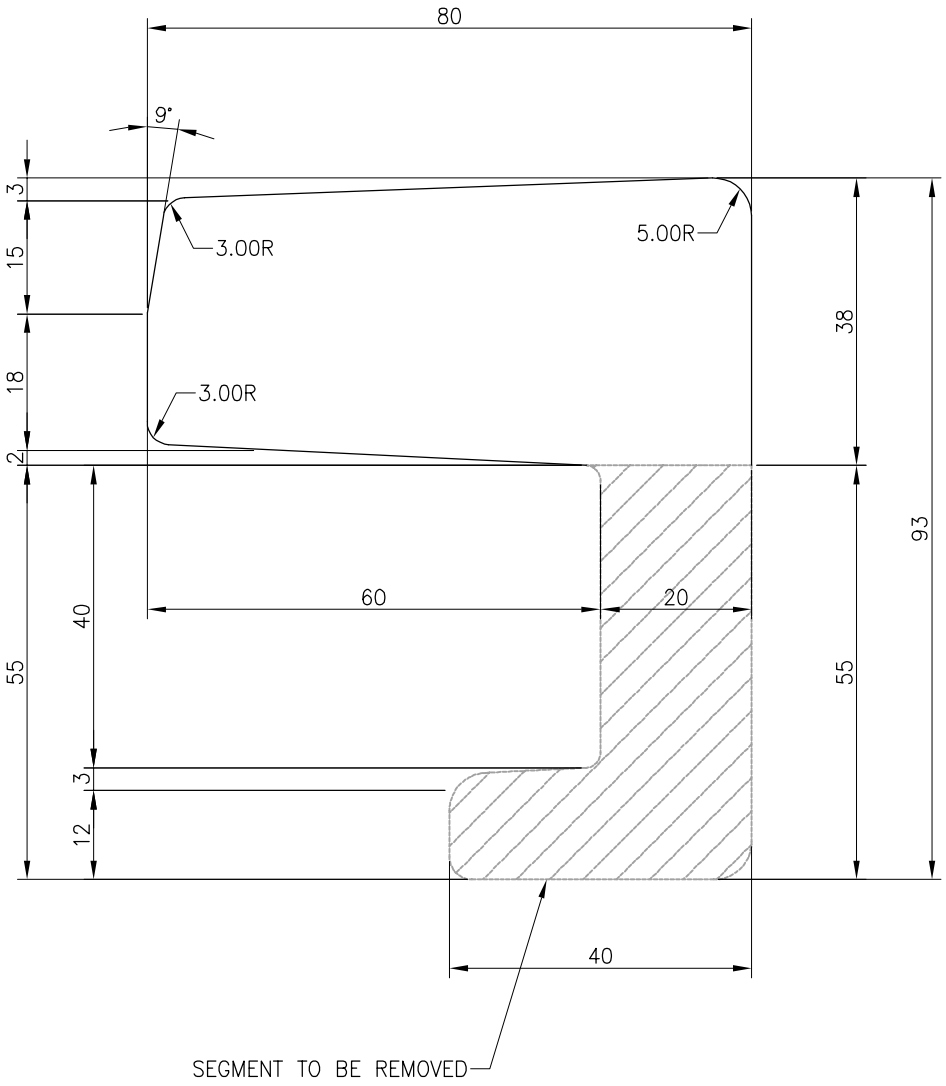

		FIGURE 5.23D MODIFIED UIC–33 GUARD RAIL	CHAPTER 5 TRACKWORK
28–JUN–16	NEW		
DATE	REVISION		

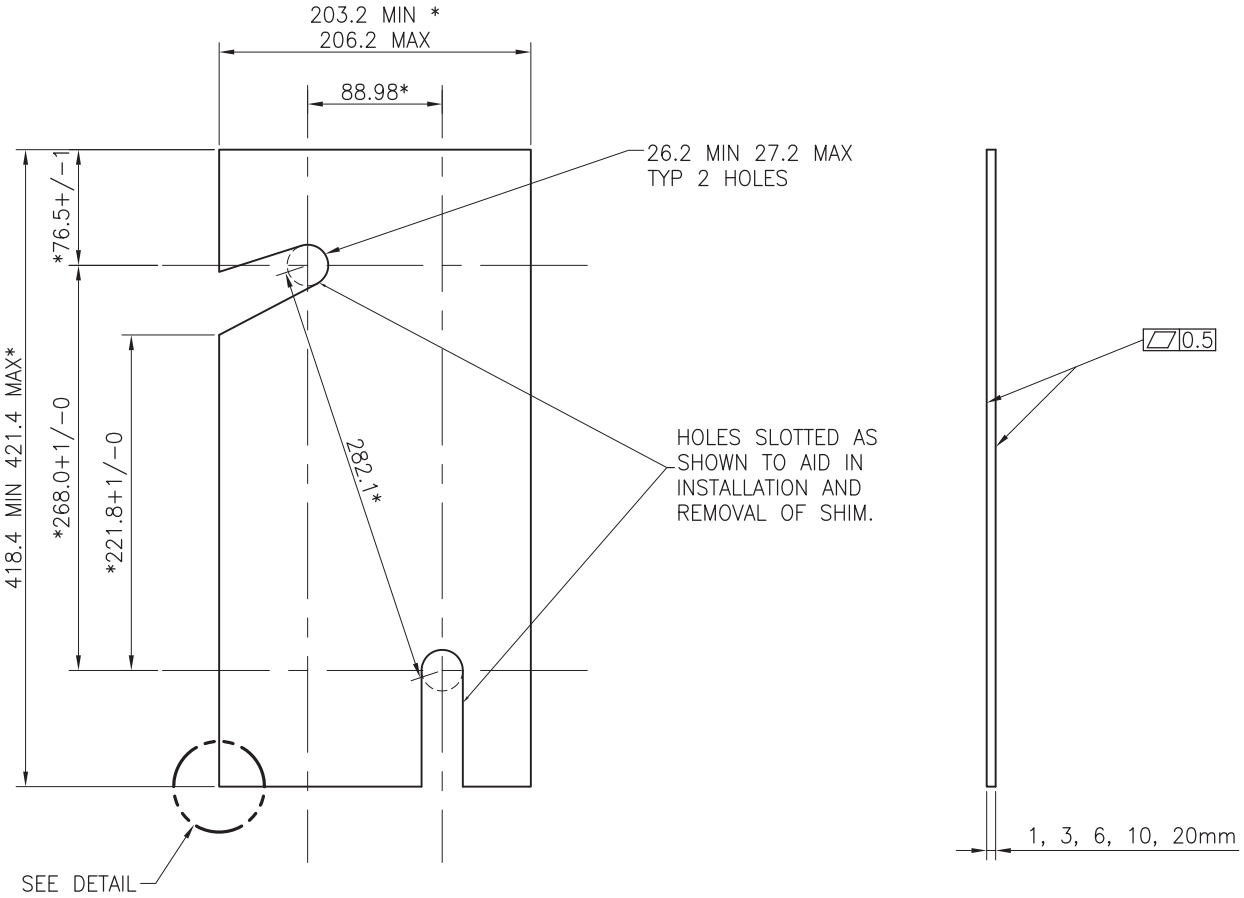

TYPICAL SHIM DETAILS

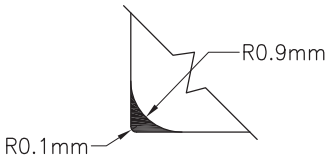

DETAIL

NOTES

* DIMENSIONS AS SHOWN ARE BASED ON L.B. FOSTER D.F. FASTENER MODEL F23R4 CURRENTLY USED IN THE SYSTEM; DIMENSIONS TO BE CONFIRMED IF OTHER D.F. FASTENER IS USED.

		FIGURE 5.24	CHAPTER 5
		TYPICAL SHIM DETAILS FOR DIRECT FIXATION FASTENER	TRACKWORK
30-JUN-11	ADJUSTED NOTES, LENGTH & WIDTH		
DATE	REVISION		

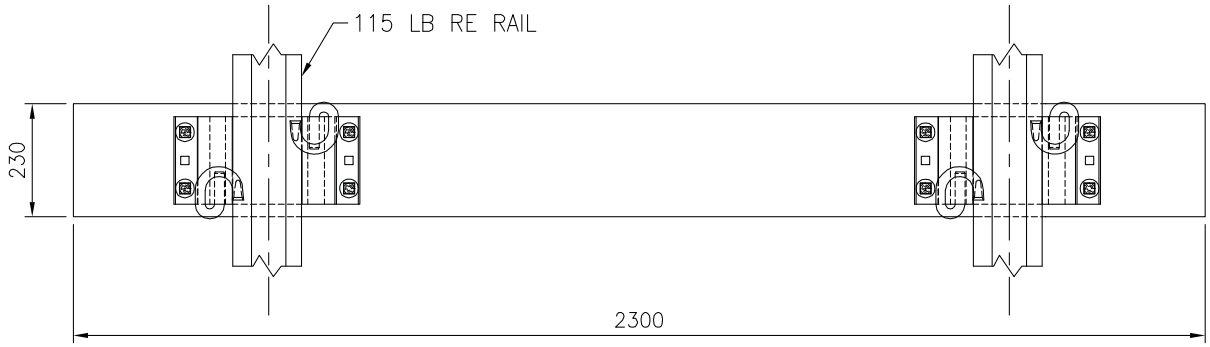

PLAN VIEW

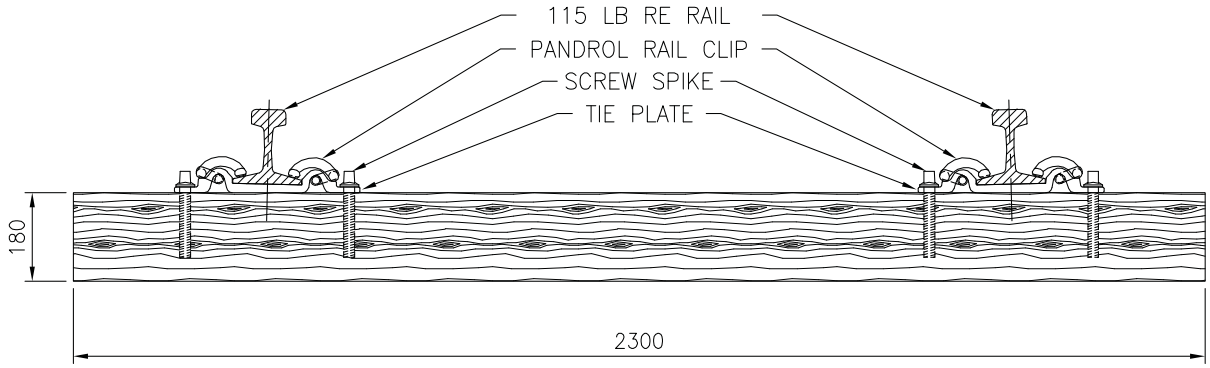

ELEVATION

		FIGURE 5.25 TYPICAL WOOD TIE DETAILS	CHAPTER 5 TRACKWORK
DATE	REVISION		

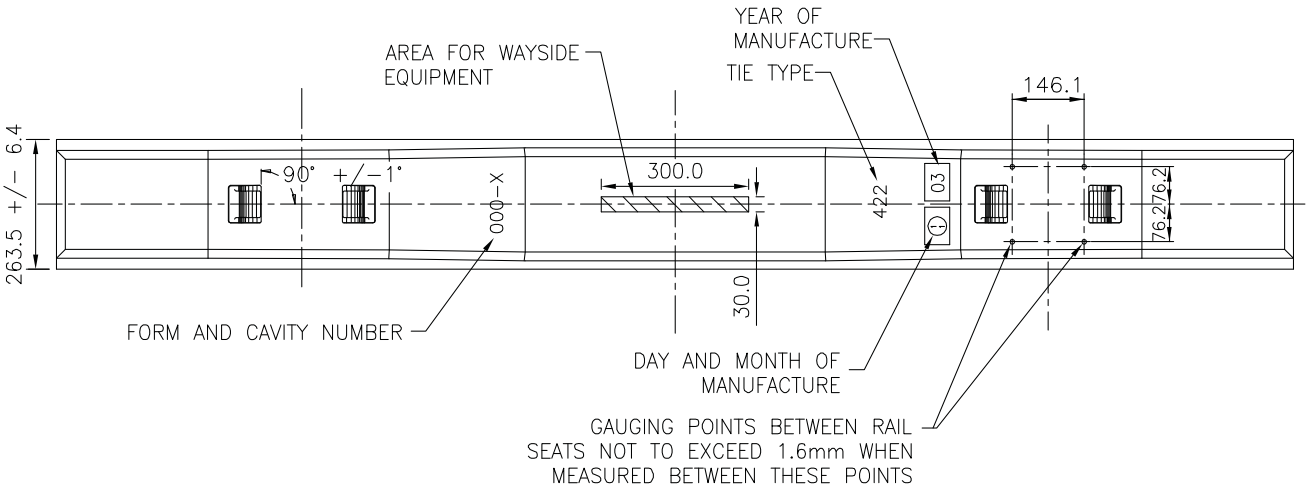

PLAN VIEW

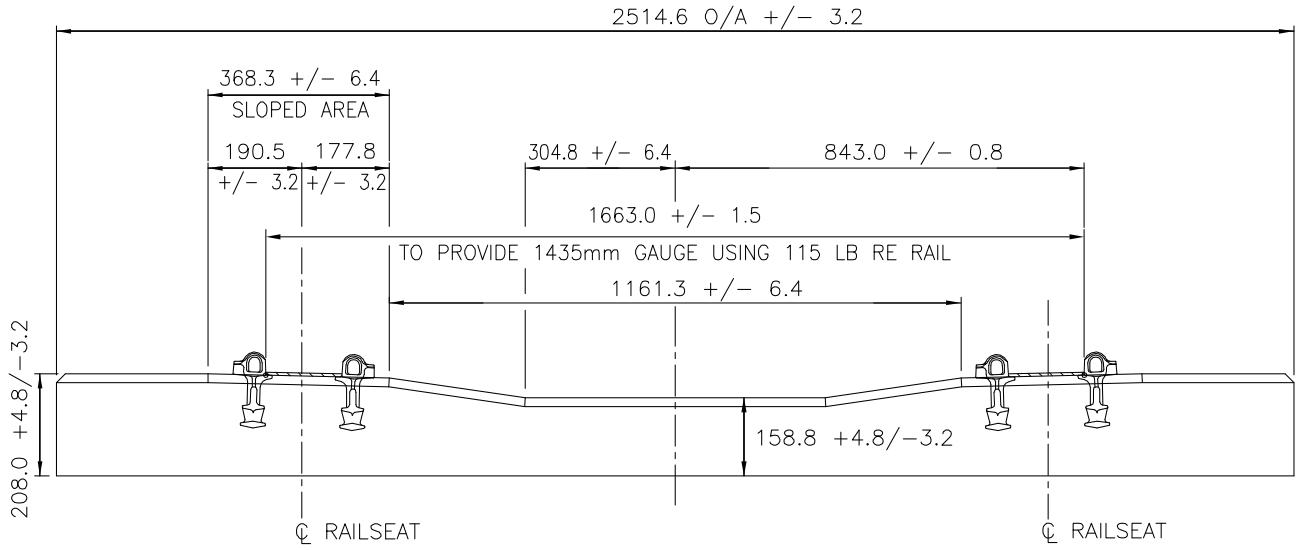

ELEVATION

		FIGURE 5.26 TYPICAL CONCRETE TIE DETAILS	CHAPTER 5 TRACKWORK
DATE	REVISION		

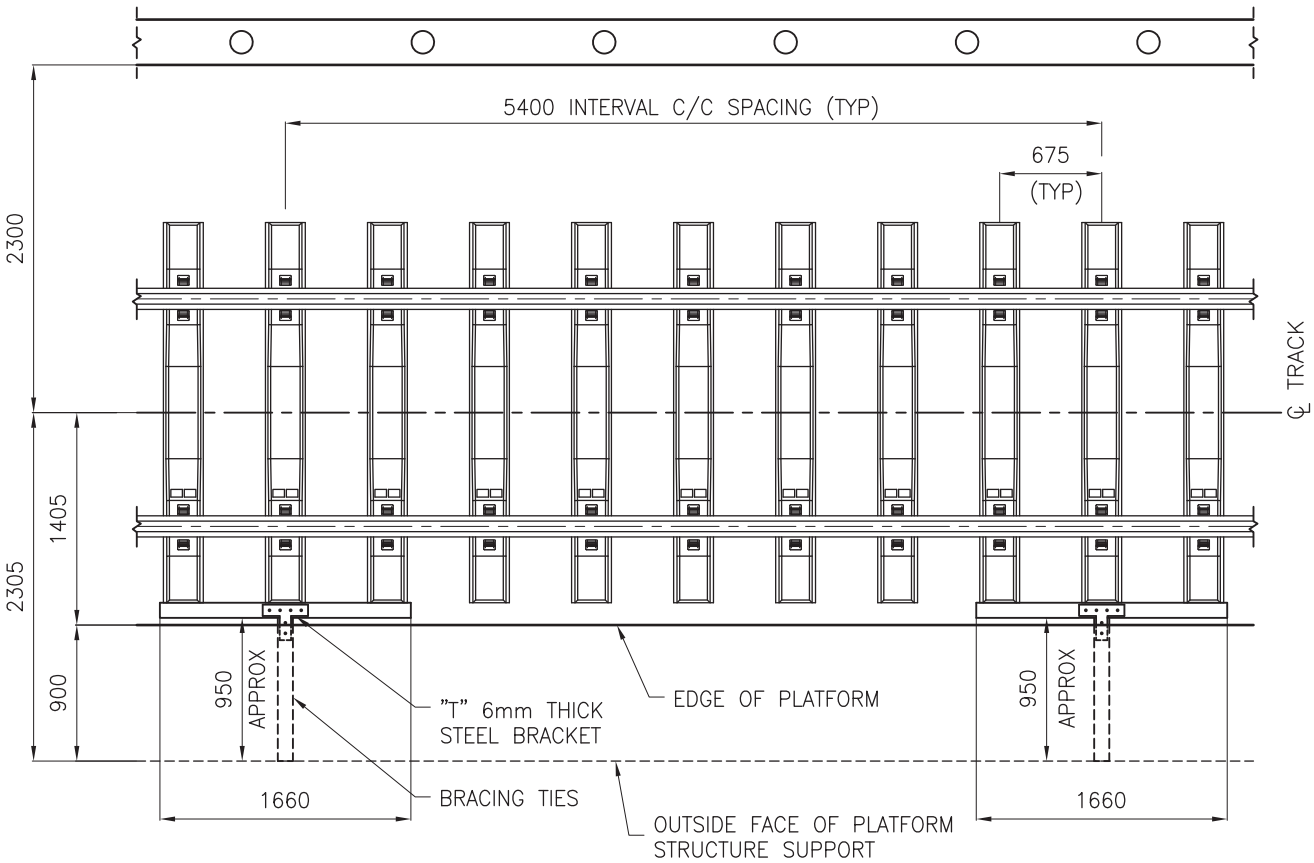

TYPICAL LATERAL TRACK BRACING DETAIL

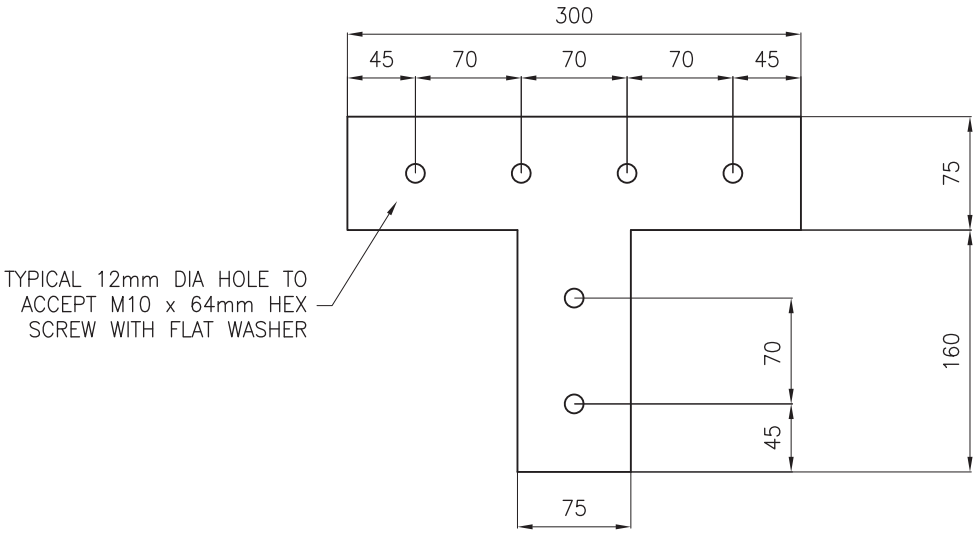

"T" BRACKET DETAIL

		FIGURE 5.27 TYPICAL LATERAL TRACK BRACING DETAILS	CHAPTER 5 TRACKWORK
DATE	REVISION		

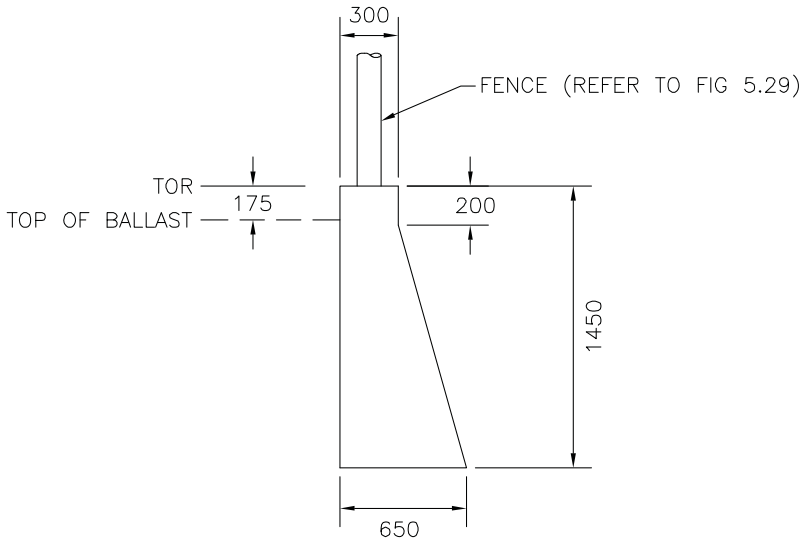

BALLAST CURB – TAPERED

TYPICAL AT LANDSCAPED AREAS

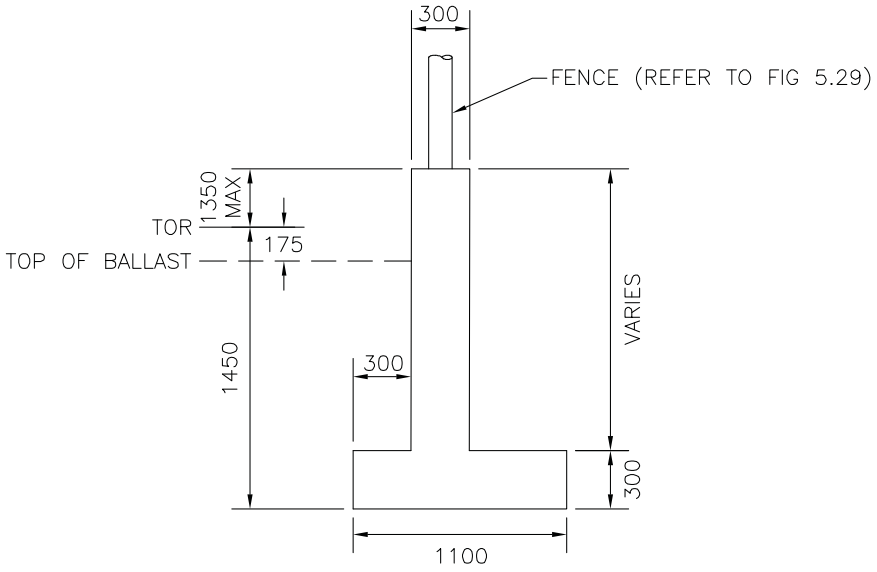

BALLAST CURB – TRANSITION TO RETAINING WALL

TYPICAL AT LANDSCAPED AREAS

		FIGURE 5.28 BALLAST CURB TYPICAL DETAILS	CHAPTER 5 TRACKWORK
DATE	REVISION		

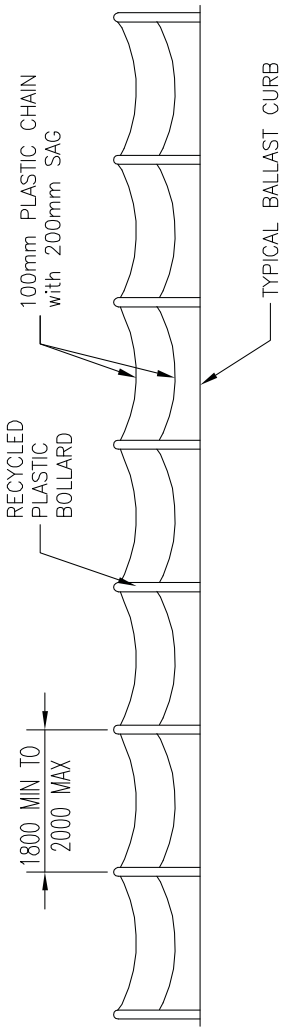

BOLLARD AND CHAIN ELEVATION – TYP.
1:100

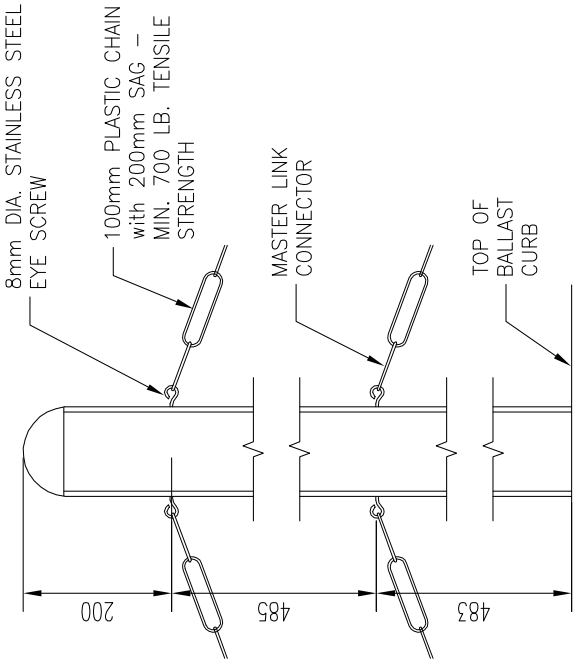

BOLLARD AND CHAIN DETAIL – TYP.
1:5

		FIGURE 5.29	CHAPTER 5
		TYPICAL BOLLARD AND CHAIN FENCE	TRACKWORK
DATE	REVISION		

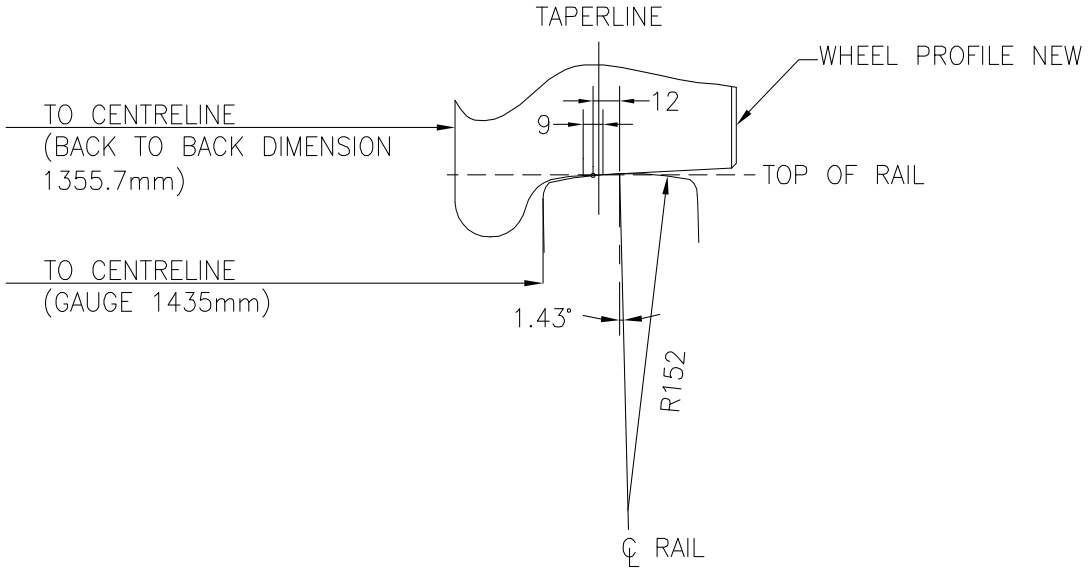

CPG RAIL PROFILE

CPG PROFILE: THIS PROFILE CENTRES THE WHEEL CONTACT BAND 12mm TO THE GAUGE SIDE OF THE RAIL CENTRELINE. THE CROWN OF THE RAIL AT THE WHEEL CONTACT BAND IS GROUND TO A RADIUS OF 152mm (6”). THE WIDTH OF THE CONTACT BAND IS 9mm.

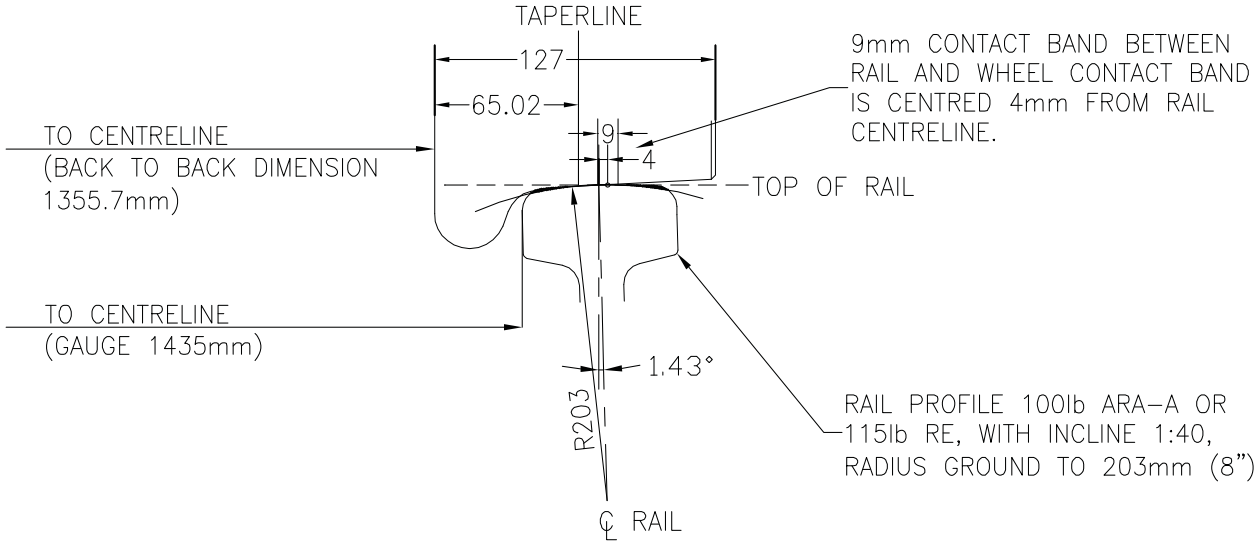

CPF RAIL PROFILE

CPF PROFILE: THIS PROFILE CENTRES THE WHEEL CONTACT BAND 4mm TO THE FIELD SIDE OF THE RAIL CENTRELINE. THE CROWN OF THE RAIL AT THE WHEEL CONTACT BAND IS GROUND TO A RADIUS OF 203mm (8”). THE WIDTH OF THE CONTACT BAND IS 9mm.

NOTE:
RAIL CANT IS 1:40. RAIL GAUGE IS 1435mm.

		FIGURE 5.30	CHAPTER 5
		CPG & CPF WHEEL ALIGNMENT	TRACKWORK
Date	Revision		

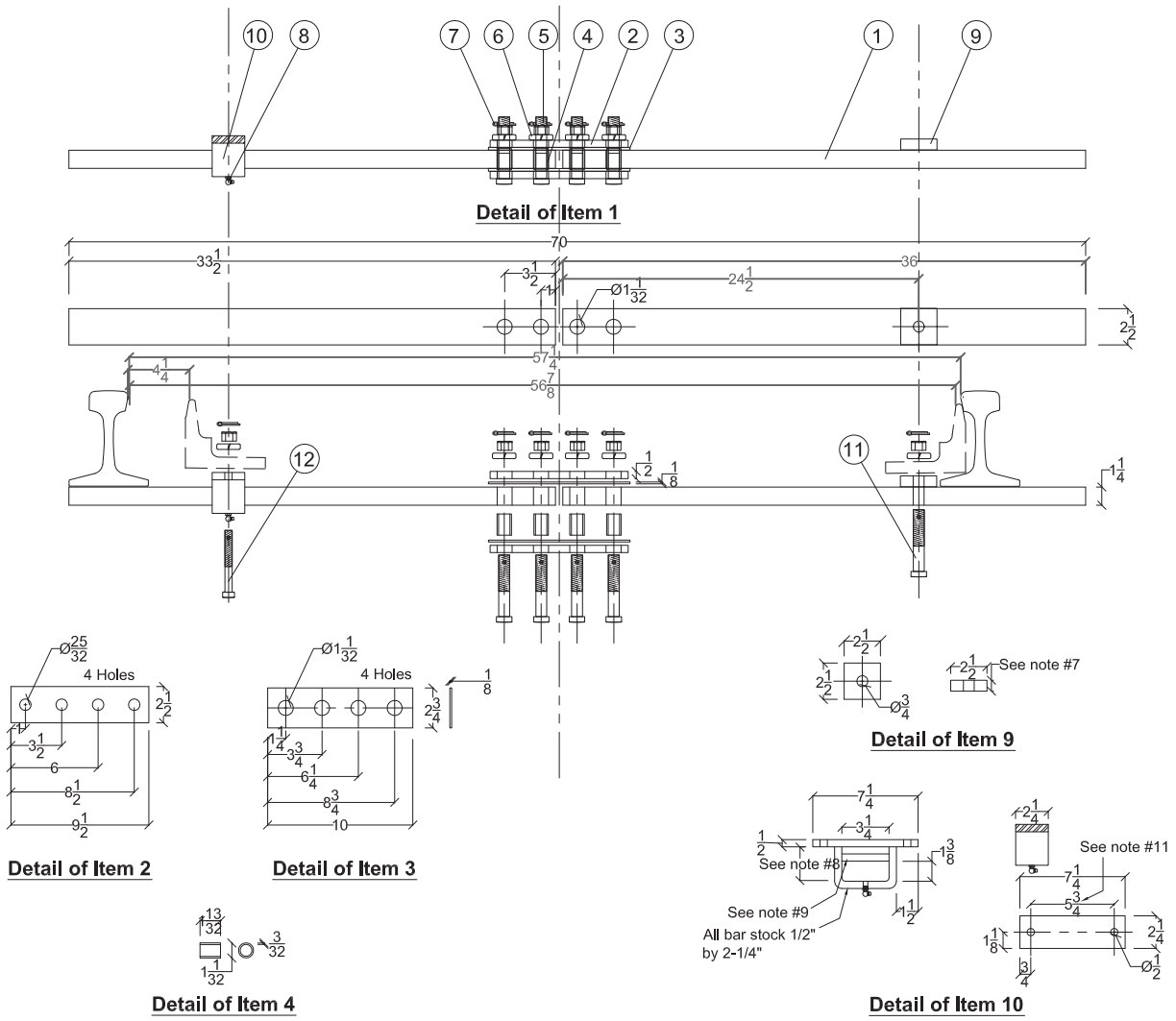

Notes:

1. Holes for insulation bolts must be relieved.
2. All metal parts in contact with insulation shall have sharp edges & burrs and other foreign matter removed before assembly.
3. Dielectric requirements: Dielectric tests shall be made with insulation dry. Assembled insulated track fitting shall withstand for not less than 3 seconds an insulated test of 1500 volts AC without flash over or puncture between all metallic parts & other metallic parts insulated therefrom.
4. All holes shall be drilled.
5. The use of acetylene torch or other burning method for the cutting of holes in the manufacturing of switch rods is absolutely prohibited.
6. Bar Stock to conform to the latest revision of ASTM Specification for Merchant Quality Hot Rolled Bar Steel, A36/44W.
7. Thickness will vary in accordance with difference between base of switch point and base of stock rail. Add 1/8" space.
8. Depth will vary in accordance with difference between base of switch point and base of stock rail.
9. Delete cross brace if Note #8 is less than 1-7/8".
10. Space between stock rail base and hold down rod will vary in accordance with roller plate maximum height.
11. Hole spacing must match hole pattern on switch rail base (confirm by field measurements).

Bill of Material

Item#	Qty	Description
1.	2	Bar Rod 1-1/4" Thick X 2-1/2" Wide X 47-3/4" Long
2.	2	Splice Plate 1/2" Thick X 2-1/2" Wide X 9-1/2" Long
3.	2	Fibre Plate 1/8" Thick X 2-3/4" Wide X 10" Long
4.	4	Fibre Bushing 7/64" Thick X 1-1/32" O.D. X 1-13/32" Long
5.	4	3/4" Dia. - 10 UNC SQ. HD Bolt X 4-1/4" Long C/W Hex Nut
6.	4	Spring Washer for 3/4" Dia. Bolt
7.	4	3/16" Cotter Pin X 1-1/4" Long
8.	1	10 mm - 90 Degree Grease Fitting
9.	1	Spacer Block 2-1/2" X 2-1/2" X Variable thickness (See note #7)
10.	1	Slide Bracket - Variable depth (See note #8)
11.	1	3/4" Dia. - 10 UNC Hex. HD Bolt X 5-1/4" Long C/W Hex Nut (length may vary)
12.	2	1/2" Dia. - 13 UNC Hex. HD Bolt X 2-1/2" Long C/W Hex Nut (length may vary)

NOTE: TO BE USED FOR INFORMATION ONLY

THIS HOLD DOWN BAR DESIGN IS CURRENTLY USED ON THE EXISTING EDMONTON LRT SYSTEM

		FIGURE 5.31	CHAPTER 5
		TYPICAL HOLD–DOWN BAR	TRACKWORK
30–JUN–11	NEW		
DATE	REVISION		

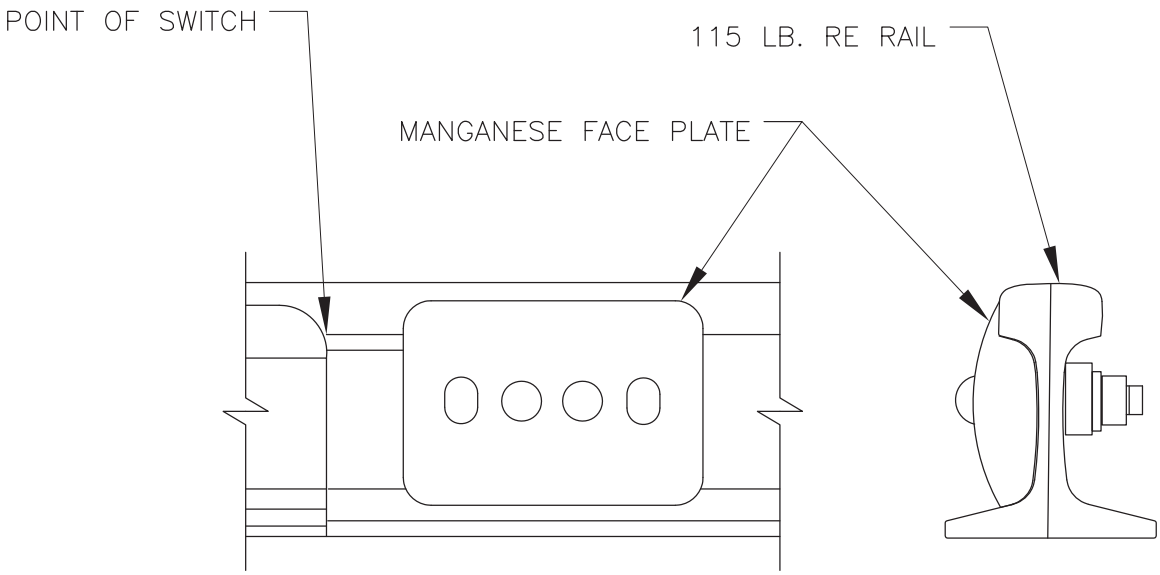

		FIGURE 5.32 TYPICAL SWITCH POINT PROTECTOR	CHAPTER 5 TRACKWORK
30-JUN-11	NEW		
DATE	REVISION		

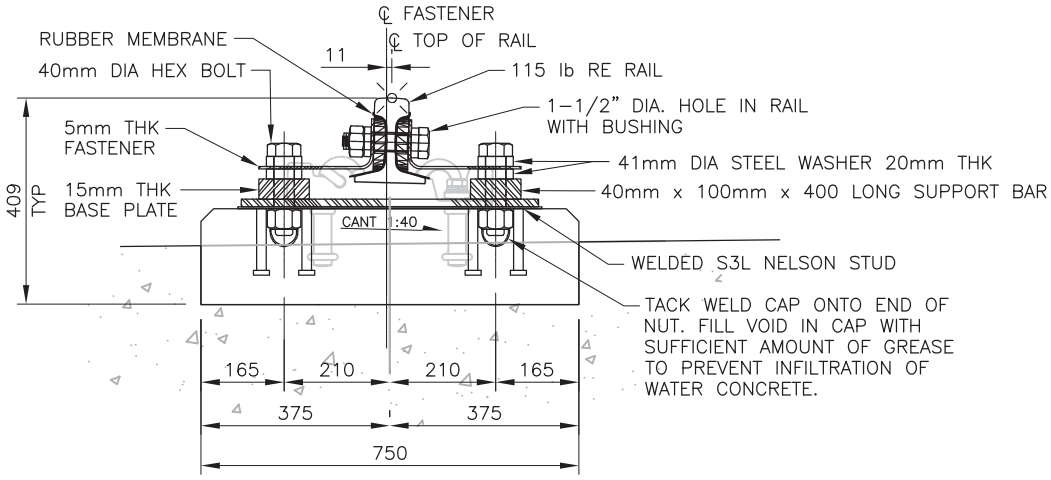

TYPICAL CAST-IN-PLACE CONCRETE PLINTH WITH RAIL ANCHOR

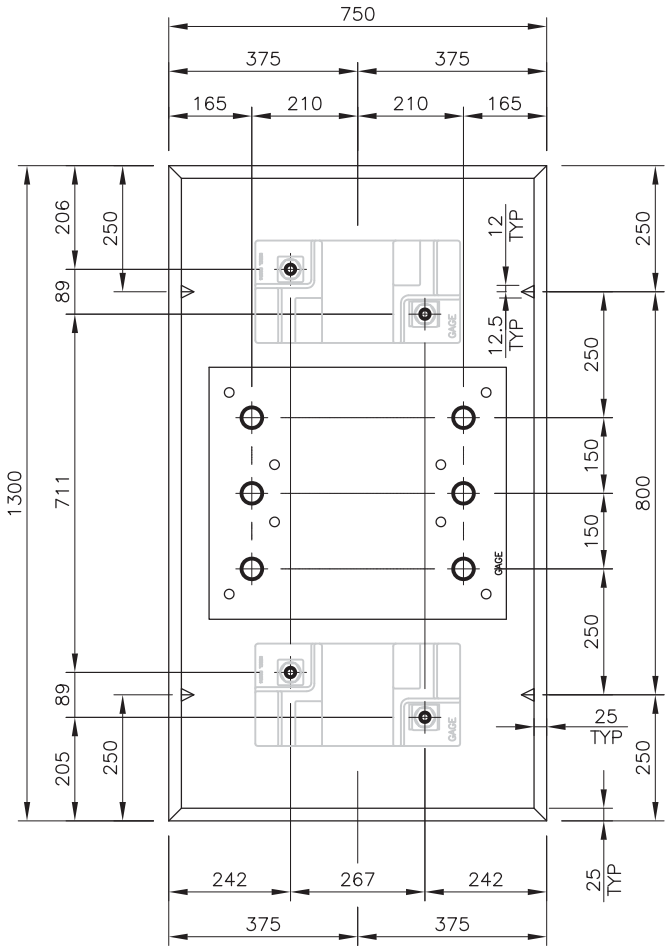

FASTENER ARRANGEMENT FOR CAST-IN-PLACE CONCRETE PLINTHS WITH RAIL ANCHOR

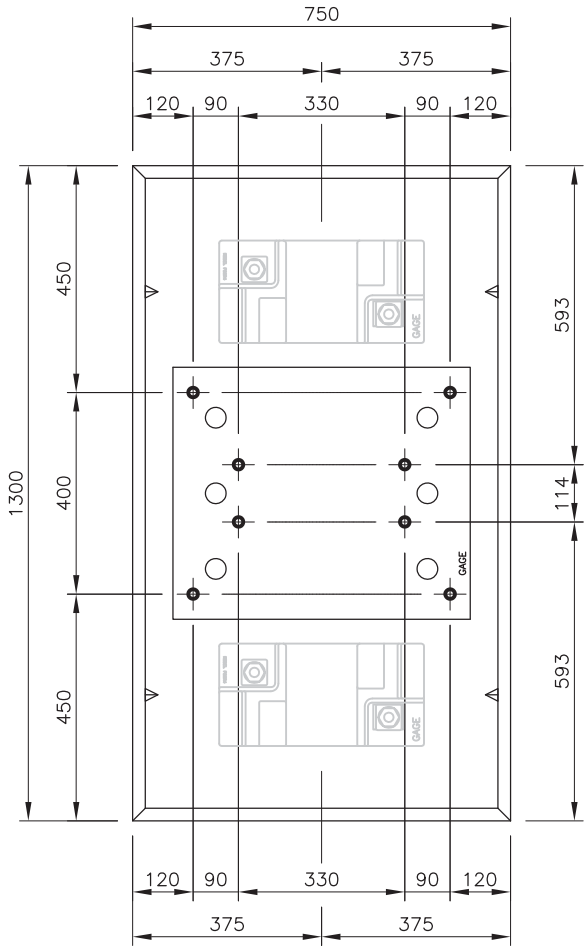

NELSON STUD ARRANGEMENT FOR CAST-IN-PLACE CONCRETE PLINTHS WITH RAIL ANCHOR

		FIGURE 5.33 TYPICAL RAIL ANCHOR ON CAST-IN-PLACE PLINTH	CHAPTER 5 TRACKWORK
30-JUN-11	NEW		
DATE	REVISION		

LRT DESIGN GUIDELINES

Chapter 6

2017 EDITION – Revisions Tracking Form

Section	Reference	Revision General Description	Issue Date
6.1.2.1	1st paragraph	Updated to improve clarity/readability.	July 2017
6.1.2.2	1st paragraph	Updated to reflect current condition.	
6.1.3.1	Abbreviations	Added NLRT and RGS.	
6.1.3.2	Floating Ground	Definition has been clarified.	
6.1.4.1	AEUC NFPA 130	Updated. Included reference to specific NFPA Standard	
6.1.5	Section	Subdivided section into elements, added requirement for consultant to assess spare parts requirements	
6.1.6	Table	Added hotel power.	
6.2.2.1	3rd bullet	Added requirement to design for contingency load.	
6.2.2.2	Types of substations Last paragraph	Included portable substation to list. Introduced Utility Complex as alternative term to TPSS	
6.2.2.3	Last paragraph	Clarified either transformer (if dual) to be capable of carrying substation load.	
6.2.2.5	Telus phone lines	Clarified phone lines required for main and standby metering communications	
6.2.2.8	Batteries	Added minimum 8 hour requirement.	
6.2.2.9	Conduit	Added feeder conduit requirements.	
6.2.2.10	2nd paragraph	Added positive feeder line and bypass switches to list of bonding exceptions.	
6.2.3	1st and 2nd paragraphs	Updated to reflect current infrastructure.	
6.2.3.1	1st paragraph	Added utility metering disconnect switch.	
6.2.3.3	1st paragraph	Revised to reflect system upgrades.	
6.2.3.4	1st paragraph 10th and 11th bullets	Revised to reflect system upgrades. Clarifies primary and secondary phase requirements.	

LRT DESIGN GUIDELINES

Chapter 6

2017 EDITION – Revisions Tracking Form

Section	Reference	Revision General Description	Issue Date
6.2.3.5	Battery capacity	Revised battery power capacity from 3 to 8 hours.	
6.2.5	1st paragraph DC Switchgear	Added requirement for protection and arc flash studies; added requirement to determine PPE. Added DC main breaker direct acting DC instantaneous overcurrent trip device.	
6.2.6.2	Circuit Reclosing	Clarified requirements.	
6.2.6.4	Rate-of-Rise Current	Clarified requirements.	
6.2.6.5	DC Switchgear Frame Fault Protection	Clarified requirements.	
6.2.6.9	Transfer Trip protection	Added requirement for adjacent substations to communicate when one is out of service.	
6.3.1.1	2nd bullet	Increased insulation requirement.	
6.3.1.2	2nd bullet	Increased insulation requirement.	
6.3.2.1	2nd bullet	Increased insulation requirement.	
6.3.2.2	2nd bullet	Increased insulation requirement.	
6.3.3	3rd bullet	Increased insulation requirement.	
6.4	4th bullet	Clarified one spare conduit for positive feeder.	
6.5.3.1	2nd bullet	Added requirement for stray current study.	
6.5.3.6	1st paragraph	Updated references.	
6.5.3.7	1st paragraph	Updated reference.	
6.5.3.8	2nd paragraph	Updated reference.	
6.5.3.9	Mechanical Clearances Underground Utility Clearances	Substituted OPTS Updated reference.	
6.5.3.10	1st paragraph	Updated reference.	

LRT DESIGN GUIDELINES

Chapter 6

2017 EDITION – Revisions Tracking Form

Section	Reference	Revision General Description	Issue Date
6.5.4.1	Variable Tensioning Systems	Corrected 'Fixed Tension System'	
6.5.4.3	Balance Weight Assemblies	Minor revisions to improve readability.	
6.5.4.4	Midpoint Anchor	Added acronym 'MPA'	
6.5.4.5	Last paragraph	Added end of track clearance requirement.	
6.5.5.3	2nd paragraph	Added wire tensions to list of variables.	
6.5.6.4	Design Considerations Protective Screening Devices	Updated reference. Minor clarification.	
6.5.7.1	1st paragraph	Minor clarification.	
6.5.7.3	Last paragraph	Added preference for NLRT arrangement.	
6.5.7.4	1st paragraph	Minor clarifications.	
6.5.7.7	1st paragraph	Minor clarification.	
Figures	Updated	6.1A, 6.1B, 6.1C, 6.2A, 6.2B, 6.2C, 6.2D, 6.3B, 6.3C, 6.3D, 6.5	

6.0 TRACTION POWER

		Page
6.0	**TRACTION POWER**	**1**
6.1	GENERAL	1
	6.1.1 Introduction	1
	6.1.2 System Description	1
	6.1.3 Abbreviations and Definitions	1
	6.1.4 Applicable Codes, Standards, Regulations and Guidelines	2
	6.1.5 Traction Power System Elements	3
	6.1.6 Traction Power System Loads and Parameters	4
	6.1.7 Safety and Security	5
	6.1.8 Environmental Considerations	6
6.2	TRACTION POWER SUBSTATIONS	6
	6.2.1 General Design Principles	6
	6.2.2 Substation Facility	6
	6.2.3 Substation Equipment	10
	6.2.4 Substation Controls	14
	6.2.5 Protection Systems and Devices	15
	6.2.6 Protection Relay Descriptions	16
6.3	TRACTION POWER DISTRIBUTION SYSTEM	18
	6.3.1 Positive Feeder Cables	18
	6.3.2 Negative Return Cables	18
	6.3.3 Tunnel Parallel Feeder Cables	19
	6.3.4 High Voltage AC Power Cables	19
	6.3.5 Electrical Switches	19
6.4	DUCT BANKS AND CONDUITS	19
6.5	OVERHEAD TRACTION POWER SYSTEM	20
	6.5.1 Overview	20
	6.5.2 Design Philosophy	20
	6.5.3 Design Requirements and Criteria	21
	6.5.4 Details of Overhead Catenary System	25
	6.5.5 Overhead Catenary System Configurations	27
	6.5.6 Catenary Support Components	28
	6.5.7 In-Span Assemblies	31

List of Figures

Figure 6.1A - Typical TPSS and Equipment Layout Original Line
Figure 6.1B - Typical Utility Complex with TPSS and Equipment Layout SLRT Extension
Figure 6.1C - Typical Utility Complex with TPSS and Equipment Layout NLRT Extension
Figure 6.1D - Portable TPSS and Equipment Layout NLRT Extension
Figure 6.2A - Typical Power Distribution Single Line Diagram Original and Critical TPSS
Figure 6.2B - Typical Power Distribution Single Line Diagram SLRT Extension
Figure 6.2C - Typical Power Distribution Single Line Diagram NLRT Extension
Figure 6.2D - Portable Substation Single Line Diagram NLRT Extension

Figure 6.3A - Typical TPSS Grounding Layout
Figure 6.3B - Typical TPSS Grounding Layout SLRT Extension
Figure 6.3C - Typical TPSS Grounding Layout NLRT Extension
Figure 6.3D - NAIT TPSS Grounding Layout NLRT Extension
Figure 6.4 - Typical Time Current Curve
Figure 6.5 - Typical OCS Simple Catenary Layout
Figure 6.6 - Traction Power Equipment Clearance Requirements
Figure 6.7 - OCS Typical Mast Placement
Figure 6.8 - Typical Catenary Wire Protection Bridge/Portal Structures

6.0 TRACTION POWER

6.1 GENERAL

6.1.1 Introduction

This chapter outlines the design guidelines for the Edmonton LRT Traction Power System. Topics include:

- Traction Power Substations (TPSS)
- Traction Power Distribution Systems (TPDS)
- Overhead Catenary System (OCS)
- Grounding and Bonding

The design consultant must use these guidelines to establish the LRT traction power system elements, layout, rating and configuration.

Facility electrical systems (including lighting) and duct bank design guidelines are presented in Chapter 11, Electrical Systems.

6.1.2 System Description

6.1.2.1 Existing Catenary System

The current catenary system utilizes a catenary contact/messenger system powered by 700V DC substations (no load) that are spaced, approximately every 1.5 km along the LRT corridor. Several of the substations are incorporated into the existing passenger LRT stations. As stated in Chapter 2, Vehicles, the LRV fleet consists of Siemens/Duewag U2 LRVs with DC propulsion systems and Siemens SD-160's with AC propulsion systems (refer to Chapter 2 Vehicles). In some areas, additional power cables or messenger wires have been installed in parallel to the catenary to support five car operations.

6.1.2.2 Future LRT Extensions

New extensions and future projects must include consideration in the design of the Traction Power System for the possibility of:

- The utilization of double or parallel messenger wires or power cables for the Overhead Catenary System.
- Power system capacity to allow for new SD-160 LRVs and existing U2 LRVs to operate as five car trains for headway design and operation consistent with the design of the signal system.
- Half acceleration operations with a substation out of service.
- Operational and architectural requirements in primarily a suburban residential setting. This includes factors such as noise, speed, overall appearance of the system, code clearances, etc.

6.1.3 Abbreviations and Definitions

6.1.3.1 Abbreviations

AT	–	Auto-tension
BMS	–	Building Management System
BWA	–	Balance Weight Assembly
EMT	–	Electromagnetic Tubing
EMF	–	Electromagnetic Field

EMI	–	Electromagnetic Interference
FT	–	Fixed Tension
MPA	–	Mid-Point Anchor
NLRT	–	North LRT Extension Project
OCS	–	Overhead Catenary System
OTPS	–	Overhead Traction Power System
Pan	–	Pantograph
PLC	–	Programmable Logic Controller
RGS	–	Rail Ground Switch
SCADA	–	Supervisory Control Data and Data Acquisition
SCP	–	Supervisory Control Panel
SLRT	–	South LRT Extension Project
TOR	–	Top of Rail
TP	–	Traction Power
TPS	–	Traction Power System
TPDS	–	Traction Power Distribution System
TPSS	–	Traction Power Substation
TWA	–	Trolley Wire Anchor

6.1.3.2 Definitions

Floating Ground is a designated term that describes the grounding in a system that does not have connection to earth-ground. Since the track rails are isolated from earth with no intentional ground to earth, it is also referred to as floating ground in the system.

Feeder Switch is an electrical switch (which is normally left closed) that connects the power distribution cables to the overhead catenary wires.

Protective Ground is a temporary ground designed for the grounding of electrical conductors during temporary circuit isolations.

Stray Current is a small amount of current that flows through paths other than the intended main traction power system circuit.

Tie Switch is an electrical switch (which is normally left open) that connects two adjacent traction power circuits.

EPCOR Utilities Inc. “EPCOR” is the utility service provider to Edmonton’s LRT system.

6.1.4 Applicable Codes, Standards, Regulations and Guidelines

Unless stated otherwise, all design activities, equipment and material selection must conform to or exceed the requirements of the latest editions of all applicable federal, provincial and municipal codes and regulations.

6.1.4.1 Acts, Codes, Standards, Regulations

ABC	Alberta Building Code
AEUC	Alberta Electrical Utility Code
AECR	Alberta Electrical Code Regulations
AREMA	American Railway Engineering and Maintenance of Way Association
ASCA	Alberta Safety Code Act
AASHTO	American Association of State Highway and Transportation Officials
ANSI	American National Standards Institute
ASTM	American Society for Testing and Materials
ASHRAE	American Society of Heating, Refrigerating and Air Conditioning Engineers
CEC	Canadian Electrical Code

CSA	Canadian Standards Association
CGSB	Canadian Government Specifications Board
EFC	Electro Federation of Canada
ISA	International Society for Measurement and Control
IEEE	Institute of Electrical and Electronics Engineers
NBC	National Building Code of Canada
NEMA	National Electrical Manufactures Association
NFPA 130	National Fire Protection Association – Standard for Passenger Rail Systems
NTRA	National Transportation Railway Act
OHSA	Occupational Health and Safety Act
OHBDC	Ontario Highway Bridge Design Code
SAE	Society of Automotive Engineers

6.1.4.2 Reference Standards and Guidelines

In addition to the *high level guidelines that are presented in this chapter, ETS has prepared several detailed and specific LRT design criteria, standards and guideline documents that are to be used by the Traction Power System design consultants to obtain additional detailed design criteria.

***Note:** The LRT Design Guidelines for Traction Power are a high level summary of the documents listed below.

- **Electrical Standards/Engineering Design Manual for Substation Electrical Equipment.**

  This document includes only the requirements for the facilities serving the Traction Power and the substation building itself. This Manual will be referred to throughout these Guidelines as the *SS Electrical Equipment Manual*.

- **LRT Overhead Traction Power Engineering Standards and Design Guidelines**

  This document only includes the requirements for LRT overhead traction power facilities. This document will be referred to throughout these Guidelines as the *Overhead TP Manual*.

- **The LRT Overhead Traction Power Standards Drawings.**

  This document contains all of the drawings related to the LRT Overhead Traction Power Standards and will be referred to in these Guidelines as the *Overhead TP Standards Drawings*.

6.1.5 Traction Power System Elements

6.1.5.1 Traction Power Substations (TPSS)

The TPSS converts the AC power from the Utility to DC power for the LRT system and includes the following primary elements:

- Dual AC power feeds from the Utility service provider with auto transfer system.
- AC switchgear
- Traction power transformer and rectifier units
- DC switchgear
- 125 V DC protection and control power system
- Positive and negative disconnect switches
- DC positive and negative power cables
- Negative ground switch
- PLC substation controller

- SCADA system

During the design, the consultant should determine a spare parts list for each component, and discuss with ETS for agreement.

6.1.5.2 Traction Power Distribution System (TPDS)

The TPDS connects the substation's positive circuit to the OCS and the negative circuit to the rails and includes the following primary elements:

- DC positive and negative feeder cables
- Positive feeder switches
- Positive tie switches

During the design, the consultant should determine a spare parts list for each component, and discuss with ETS for agreement.

6.1.5.3 Overhead Catenary System (OCS)

The OCS provides the positive circuit contact for the LRVs and include the following primary elements:

- OCS masts (poles)
- OCS hardware
- Contact and messenger wires

During the design, the consultant should determine a spare parts list for each component, and discuss with ETS for agreement.

6.1.6 Traction Power System Loads and Parameters

New substation or right of way additions to the LRT system should be preceded by a traction power system load flow analysis. A load flow study can simulate the electrical performance of the TPS using the physical and operational aspect of the proposed additions under multiple scenarios. The results of the study will help to ensure that the power system is adequately designed to satisfy desired performance criteria using the most economical expenditure of initial capital investment.

The following general loading requirements must be taken into consideration in the design of the TPS. These loadings are subject to change.

	U2	SD 160 (Reduced AC Mode)
Motoring current per LRV	560 A DC	900 A DC
Acceleration current per LRV	900 A DC	900 A DC
Peak hotel power	50 kW	50 kW
Minimum operating voltage	480 V DC	480 V DC
Absolute minimum voltage	420 V DC	420 V DC
Absolute maximum voltage	720 V DC	900 V DC

TPS nominal voltage level 600 V DC

TPS no-load voltage level 700 V DC

In addition, the TPS must be designed to accommodate the following full acceleration and half acceleration criteria:

6.1.6.1 Full Acceleration Design Criteria

Full acceleration scenarios simulate the worst case conditions that could occur during normal operations where two, five-car trains simultaneous accelerate away from the same platform in opposite directions. With all substations in service, the traction power system is to be modeled to ensure that the voltage level supplied to the trains remains above the system low voltage limit of 480 V DC. The traction power system is to be designed for the following operational conditions:

- Five (5) minute headway between trains and 2.5 minute headway for overlapping lines.
- Five-car SD-160 trains.
- 75 kW auxiliary power (based on duty cycle analysis of LRV).
- LRV in reduced power mode (Torque taper point at 20 km/h).
- 82 kN maximum tractive effort.
- 1.43 m/s² maximum acceleration (full power).
- AW4 loading (13.35 t).

6.1.6.2 Half Acceleration Design Criteria (Reduced Operation)

The Half Acceleration scenarios simulate the traction power system with a mainline substation removed from service. With the substation out of service and bypassed, the two adjacent substations feed the affected overhead catenary section. In the affected section the trains operate at Half Acceleration. Outside the affected area, the trains operate normally at full acceleration.

To simulate the maximum traction power loading under these conditions, trains traveling in both directions are to be simultaneously stopped and started at the midpoint of the affected section. This test is performed to ensure that the traction power system voltage measured at the pantograph for each train is maintained above the minimum allowed voltage of 480 V DC. The Half Acceleration analysis is to be repeated for each new substation.

For Half Acceleration simulations the following vehicle parameters are lowered:

- 41 kN maximum tractive effort (half tractive effort).
- 0.715 m/s² maximum acceleration (half acceleration).

All other vehicle parameters are the same as the Full Acceleration criteria.

6.1.7 Safety and Security

The guidelines and required safety and security measures for LRT passengers, the general public and service and maintenance staff are outlined in Chapter 16 Safety and Security, of these design guidelines.

From Chapter 1 General Section 1.2.1.2 “The City is committed to the development of a Light Rail Transit and Busway System which in its design, construction and operation meets with generally accepted principles of safety and is consistent with sound and accepted engineering standards and practices. The articulation of these principles, standards and practices must take into account the safety concerns and physical, demographic and land use environments of the communities along any given section of the LRT line”.

In general, the design of the substation facility must consider factors that relate to health, safety and security for the general public and the workers that service the system to ensure that:

- Public safety is maintained at all times
- Occupational Health & Safety Act provisions are met
- All guidelines relating to national and local electrical codes, i.e. CEC and AEUC are met.

The TPSS must include the following features:

- Building intrusion alarms and monitoring of these alarms.
- Card access reader (C-Cure System) to restrict access to authorized staff only.
- SCADA controls and alarms on the equipment are connected to the EPCOR Control Room via the fibre network.
- Outdoor lighting above each substation door.
- A Fire Alarm panel monitoring smoke and/or heat detections
- Exit and Emergency lighting as required by building codes
- An Emergency Push Button that activates a trip signal to all traction power equipment (located near each TPSS man door)
- Remote annunciation of building systems and equipment is via BMS and SCADA and is provided to the ETS Control Centre located at the Churchill LRT Station.
- Two portable fire extinguishers should be located inside the building at each man door.
- A battery- powered emergency lighting system which will provide a minimum of four hours.
- A minimum of three (3) telephone lines from the telephone service provider.
- A minimum of four (4) telephone lines from the ETS Control Centre.

6.1.8 Environmental Considerations

The design of the TPS must also comply with all current legislation and regulatory requirements from Alberta Environment and/or the authority having local jurisdiction.

- Noise
- LRT system aesthetics
- The safe interaction of motor vehicles and pedestrians in a shared right-of-way area
- Electrical effects on electronic equipment and humans
- Occupational Health & Safety Regulations
- Water pollution
- Protection of plants and wildlife
- Electrical safety of workers and the public

6.2 TRACTION POWER SUBSTATIONS

6.2.1 General Design Principles

The following general principles must be applied to the design of new traction power substations:

- Maintain a consistent design approach.
- Coordinate equipment life expectancies with the overall LRT system life expectancy.
- Consider “lessons learned” from the design of previous substations.
- Standardize all major equipment as much as possible.
- Coordinate new facilities design with existing systems.
- Ensure the operational requirements and load requirements are not compromised in terms of capacity, reliability, and maintainability of the system.

6.2.2 Substation Facility

6.2.2.1 Spacing and Location

A System Load Flow Study must be conducted to determine the optimum location and rating of the substations to ensure that:

- The system DC voltages are maintained above the 480 V DC minimum LRV operating voltage level.

- The rail to ground voltage does not exceed the maximum permissible limits.
- The distribution system conductors are adequately designed to carry normal and contingency system load without overheating.
- Adequate short circuit protection can be provided.

Refer to Section 2.23 of the *Overhead TP Manual* for additional considerations.

6.2.2.2 Substation Types

The existing Edmonton LRT system utilizes three types of substations:

- Remote, Stand-alone or Portable Substation

This type of substation is located in a separate building structure within the LRT ROW in between or near passenger stations. In some instances signal equipment and the passenger station electrical equipment is also located at this building and may be fed from the TPSS.

- Integrated Substation

This type of substation is located within the passenger station structure. The substation may also contain the passenger station electrical equipment.

Where the building housing the TPSS is shared with signals, communications, electrical distribution and/or other rooms, the overall building should be referred to as a Utility Complex.

6.2.2.3 Building Design

The TPSS will be designed to house the following systems and related essential equipment:

- Dual utility feeds (main and standby) with an auto transfer system
- Utility metering equipment
- AC switchgear
- Rectifier transformer
- Rectifier and interphase transformer
- 1000 V DC switchgear
- Negative disconnect switch
- Negative ground switch
- 125 V DC battery bank and chargers
- 125 V DC control power system
- Local PLC HMI annunciation panel
- SCADA system
- Fibre patch panel
- Substation grounding system to include adequate ground grid
- Fire alarm and intrusion detection systems
- Heating and ventilation systems
- Station service equipment
- Card access reader and panel
- First aid kit
- Eye wash station

Some substations may also include a signal room housing signal relay and electrical equipment including emergency generator. Refer to Chapter 7 Signals, Section 7.5.12 for further details.

For typical TPSS building footprints and equipment layout refer to Figures 6.1A through 6.1C and related drawings in the *SS Electrical Equipment Manual*.

In some cases the substations may be located in a critical LRT operating area. These areas may include a main line section in which train frequency is increased (less than every 5 minutes) or near connection points where two LRT segments merge to a single line. In these instances it is preferred to have dual transformer and rectifier units in the substation for added redundancy and power capability. If dual transformers are provided, either unit should be capable of carrying the entire load of the substation.

6.2.2.4 Building Structure

The structural design guidelines for a stand-alone building are provided in Chapter 9, Structures. For guidelines related to other building components and elements refer to:

- Chapter 10, Stations and Ancillary Facilities
- Chapter 11, Electrical Systems
- Chapter 12, Mechanical Systems

The substation doors must be equipped with:

- Non-removable hinge pins.
- Panic bars on all man-doors for emergency exit.
- Dead bolt locks (locks are to be fitted for special substation master key as per existing LRT TP substations).
- Intrusion detection.
- All man doors equipped with a card access reader (CAS).

Concrete walls and floor must be adequately sealed to prevent build up dust which can negatively impact operation of the equipment.

6.2.2.5 Building Services

Section 10 of the *SS Electrical Equipment Manual* outlines the building services requirements for:

- Building electrical and lighting
- Emergency lighting
- Fire alarm
- BMS
- SCADA
- Card access reader
- Telus phone lines for:
    - Primary Utility metering communications with EPCOR (13.8 kV AC Service).
        - Main feed.
        - Standby feed.
    - Secondary Utility metering communications with EPCOR (600 V AC Service).
    - 1 Spare line.
- ETS communication phone lines for:
    - Regular telephone at desk for maintenance personal.
    - Dedicated line for building management system.
    - ETS Operations radio.
    - 1 Spare line.

Note: Section 10 of *SS Electrical Equipment Manual* states that a minimum of six telephone service lines must be installed in each TPSS. The Designer must confirm these requirements with the telephone service provider early in the design phase of the substation.

6.2.2.6 Heating and Ventilation

Adequate heating and ventilation must be provided to at each substation to maintain the indoor temperature between 13°C and 25°C. The heating and ventilation systems must be powered through the TPSS station service supply.

Detailed design considerations and requirements for heating and ventilation are outlined in Section 11.0 of the *SS Electrical Equipment Manual*.

6.2.2.7 Incoming 13.8 kV Utility Service

Each TPSS should be fed from two primary feeders originating from different utility substations, or, as a minimum, from different supply buses in the same substation. The two feeders will be designated as “main” and “standby” and will be terminated at the AC switchgear in the TPSS.

The TPSS AC switchgear provides switching and control for the main – standby scheme and must be equipped with main and standby breakers and an auto transfer system. In the instance that the main supply is lost, the system will automatically transfer over to the standby supply.

In addition to the two feeds from the utility service provider, a separate emergency power feed must be made available to the substation to provide the building lighting, building security, and heating in the case of a total power outage. This emergency feeder may be a connection to an emergency generator located in the substation, or in a nearby passenger station, or to a portable emergency generator.

Refer to Figures 6.2A thru 6.2D. Figure 6.2A is a typical power distribution single line diagram applicable for the substations constructed between University and Clareview LRT stations. Figure 6.2B is a typical power distribution single line diagram applicable for the South LRT Extension. Figure 6.2D is a typical power distribution single line diagram applicable for the North LRT Extension as generally described in above paragraphs.

6.2.2.8 Substation Control Power

Each substation must be equipped with an auxiliary power supply system to provide nominal 125 V DC power to the AC and DC switchgear protection and control systems. The auxiliary supply will include a battery bank and battery charger. The battery bank ensures power is provided to the control circuits if there is a utility power failure. The battery bank shall provide full control power for a minimum of 8 hours.

6.2.2.9 Conduits

The following are the general design requirements for TPSS conduits:

- EMT conduit must be used for all indoor applications.
- Galvanized rigid steel conduit must be used for all outdoor above-grade service and ducts attached to the face of the tunnel walls.
- PVC conduit must be used for underground, concrete encased, or direct buried installations.
- Rigid PVC schedule 40 conduit may be used for added mechanical protection where required.
- Rigid steel must not be used to sleeve single conductor cables.
- Where possible, conduit penetrations through structures should be grouped. The minimum size of conduit installations must be 25 mm.
- All conduit installations must provide a minimum of 25% spare capacity for future wire/cable runs.

- Dedicated feeder ducts must be provided for each individual positive feeder between the TPSS and the OCS line.
- Dedicated feeder ducts must be provided for the negative feeders between the TPSS and the rail.
- For each positive and negative feeder, the 25% spare capacity must be provided in unused spare conduits of the same size as the used conduits. This provides redundancy for a cable failure that renders a conduit unusable.

6.2.2.10 Grounding

Effective grounding of the electrical system is required for personnel safety, equipment protection, prevention of static charges, fault protection, neutral grounding, operation and coordination of protective relays, and instrumentation and communication equipment interference protection.

All equipment and enclosures within the TPSS (with the exception of the DC switchgear, rectifier enclosures and positive feeder line and bypass switches) must be bonded to ground to eliminate touch potential. All grounding conductors must be sized and installed in accordance with the CEC. The maximum TPSS ground resistance must be one ohm.

Refer to Figures 6.3A through 6.3C for illustrations of typical grounding systems.

Detailed design considerations and requirements for grounding and bonding are outlined in Section 8.0 of the *SS Electrical Equipment Manual*.

6.2.3 Substation Equipment

The TPSS equipment layout used for the original ETS substations from Clareview to University stations is shown in Figure 6.1A. The design includes dual AC utility feeds connected to a main-standby breaker scheme with an auto transfer system. The substation is normally fed through either of the two main AC breakers. Connected to the AC bus are two rectifier breakers that supply two traction power transformer-rectifier units. Each rectifier feeds the DC switchgear positive bus through a dedicated DC main breaker. The switchgear then distributes positive power to the OCS through four high speed feeder breakers. The rectifier negative circuit is connected to a negative cabinet. The cabinet is connected to the rail completing the return path for the traction power system.

The new TPSS's on the SLRT and NLRT lines are similar to the original substations with the exception of the redundant traction power transformer. The new substations utilize a single transformer-rectifier unit.

Traction power equipment may be provided in the configuration described below:

- Dual AC utility supplies will be implemented. Single 2.0 MVA transformer-rectifier units will typically be installed. This change reduces the redundancy while maintaining the load capabilities in anticipation of future operations.
- The TPS will be designed to operate at half acceleration with one substation out of service.

Figure 6.1C shows a typical 2.0 MVA substation equipment layout.

6.2.3.1 AC Switchgear

The 15 kV AC switchgear includes the equipment required for the monitoring and controlling of the main and standby incoming AC feeder breakers and AC rectifier breakers for the primary power supply for the traction power system. The switchgear contains utility metering equipment, utility metering disconnect switch, AC breakers, auxiliary power and protective equipment. The switchgear must be of metal-clad design as per IEEE C37 20.2.

Where dual AC feeders are available the AC switchgear will utilize a main-standby scheme with an auto transfer system.

Standard ratings for the AC switchgear are:

- Rated nominal voltage: 13.8 kV
- Rated maximum voltage: 15 kV
- Minimum main bus continuous current: 1200 amps
- Rated frequency: 60 Hz.
- Basic Impulse Level: 110 kV
- Fault Interrupting Capacity: 31,000 A (750 MVA) (to be confirmed by a System Short Circuit Study)

The AC switchgear must conform to the latest edition of the EPCOR Customer Connection Guide. The following are some of the key items that must be designed into the switchgear.

- Utility metering cells are required for each incoming service.
- Metering transformers are to be installed on the load side of the circuit breakers and must be capable of being isolated electrically from both supply and load. On services with the possibility of an alternate source, or an onsite generator, gang operated isolating switches with contact operation verifiable by direct visible means must be installed after the cabinet for the current transformers and before transformers or other equipment.
- Provision must be made for installation of the potential transformers in a drawer type cabinet with high and low potential opening devices. These drawers must fully extend the depth of the cabinet. The cabinet must be built of adequate strength to support 3 potential transformers and must exist at floor level. A hinged door with provision for sealing to be installed to provide access to the potential transformers. Pin type contacts are not acceptable.

Detailed design considerations and requirements are outlined in Section 3.0 of the *SS Electrical Equipment Manual*.

6.2.3.2 DC Switchgear

The DC switchgear functions as the control and protective equipment for the distribution of DC power to the LRVs. The originally installed DC switchgear included two main DC breakers fed from two rectifiers, and four high speed, single pole circuit breakers for the positive feeders to the OCS. The switchgear and rectifiers are to be isolated from ground either by a glastic sheet, or non-conducting epoxy floor. A special ground-fault protection scheme has to be setup for the switchgear as it will be isolated from ground. Protective relaying for each DC feeder breaker, and the incoming rectifier breakers must be contained in the DC switchgear. The switchgear is metal clad and will be built in accordance with IEEE 37.20.

The current NLRT extension project includes DC switchgear that incorporates the negative disconnect switch, rectifier and inter-phase transformer into the lineup with the four DC circuit breakers.

Standard ratings for the latest DC switchgear are:

- Nominal voltage: 750 V DC
- Maximum voltage: 1000 V DC
- 60 Hz withstand voltage: 3700 V AC (RMS)
- DC withstand voltage: 5200 V DC
- Continuous current rating: 6000 A
- Main breaker current rating: 6000 A
- Feeder breaker current rating: 4000 A
- Peak closing and latching current: 200 kA
- Rated short circuit current: 150 kA

Detailed design considerations and requirements are outlined in Section 4.0 of the *SS Electrical Equipment Manual*.

6.2.3.3 Traction Power Rectifier

As with transformers, the original substations have been upgraded with dual 1500 kW and 2000 kW heavy traction service rectifiers operating in parallel. Newer substations have been designed using single 2000 kW rectifiers.

The rectifiers must be naturally ventilated traction power rectifiers with silicon disc-type diodes. There are two three-phase bridges connected in a Circuit 31 configuration.

Standard ratings for the latest rectifiers are:

- Output: 2000 kW, 600 V DC, 3333 Amps, Continuous
- Overload rating of 150%: 5000 Amps for 2 hours
- Overload rating of 300%: 10000 Amps for 1 minute
- Cooling maximum temperature: 45°C
- Equipment operating temperature: 35°C

The rectifiers must include the following features:

- N-1 rating
- Natural convection-cooling
- Full wave diode bridges providing 12-pulse rectification.
- Designed to meet NEMA RI-9 specification for Heavy Traction service
- After 100% full load temperatures are reached the rectifier must withstand, without damage, the following additional overloads: 150% load for two hours and 300% load for one minute at the end of the two hours.
- Be complete assemblies consisting of all rectifier elements, heat sinks, internal buses, fuses, diode failure and over temperature protection, rectifier over temperature protection, and all necessary components matched to the traction power transformer.

Detailed design considerations and requirements are outlined in Section 5.0 of the *SS Electrical Equipment Manual*.

6.2.3.4 Rectifier Transformers

The original LRT substations have been upgraded to 1.5 and 2.0 MVA rectifier transformers operating in parallel and are designed to provide 100% redundancy during normal operations. The rectifier transformer pair must be able to accommodate the maximum anticipated load for five car operations.

Newer substations are utilizing a single 2.0 MVA transformer.

In addition, the rectifier transformer must meet the following requirements:

- Designed to meet NEMA RI-9 specification for Heavy Traction service
- After 100% full load temperatures are reached the transformer must withstand, without damage, the following additional overloads: 150% load for two hours, 300% load for one minute at the end of the two hours.
- Have a dual winding secondary in a Δ – Y configuration (IEEE C57.18.10 Circuit 31 with a 30% phase displacement to feed the 6 phase – 12 pulse rectifier. This setup helps reduce the system harmonic current distortion.
- Be dry-type and self-cooled.
- Include temperature monitoring devices with adjustable alarm and trip contacts.
- Designed to accommodate all the scenarios, for all the possible train consists, as listed in section 6.1.6.

- Designed such that the transformer and rectifier are a matched assembly.

Standard ratings for the latest rectifier transformer are:

- Nominally rated at 2000 KVA (this rating must be verified prior to commencement of final design).
- Type: ANN
- Primary Phases: 3
- Secondary Phases: 6
- Frequency: 60 Hz
- Class: 220 insulation (150°C rise above 40°C Ambient)
- Primary Basic Impulse Level (BIL): 110 kV
- Secondary Basic Impulse Level (BIL): 45 kV
- Primary voltage: 13.8 kV delta
- Secondary voltage: 519 V delta, 519/300 Wye or
- Taps (offload): +2x2.5%, -5x2.5% primary

  Note: The latest LRT extension included three additional transformer taps in addition to the standard five primary taps to allow the system to be operated at a higher voltage in the future if required. These three additional taps have been added at -7.5%, -10%, and -12.5%.

- Primary to secondary wye impedance: 6%
- Primary to secondary delta impedance: 6%
- Winding material: Copper
- Voltage regulation not greater than 6% from 1% load to full load

Further design considerations and requirements are outlined in Section 6.0 of the *SS Electrical Equipment Manual*.

6.2.3.5 Auxiliary Power Supply System

A direct-current auxiliary power system is used for the basic substation controls, relaying, SCADA equipment, communication equipment, and alarm functions. The system consists of a storage battery bank, matched battery charger, and DC distribution panel.

The battery and battery circuits should be properly designed, safeguarded and maintained, and the emergency requirements should be carefully estimated to ensure adequate battery performance during emergencies or loss of utility for eight hours. The batteries shall be of low hydrogen emission design for indoor installation.

The battery charger must be independent of the condition of the battery bank. It must support the full DC power output as long as AC is available. If a standby generator or alternate feed system is available, the battery charger must be fed from that source to improve reliability and availability of the auxiliary supply.

The basic requirements for the battery bank are:

- Nominal system voltage of 125 V DC.
- Minimum stored energy capacity should be adequate to supply the load demand for eight hours after a utility outage.
- The charger must include ground detection, alarm mode, and temperature compensation.
- Float and equalization capability
- Low and high voltage alarms
- Charger failure alarm

The sizing of the DC auxiliary power supply must be based on a duty-cycle evaluation of the entire auxiliary system load.

Further design considerations and requirements primarily related to Charger/Rectifier, DC Distribution Panel and Inverters are outlined in Section 7.0 of the *SS Electrical Equipment Manual*.

6.2.3.6 Wiring Methods

Wire installations must be designed as per the CEC.

Cable in tray is the preferred method for routing cables. However, conduit may be used when it is difficult to support the cable, or when additional mechanical protection is required.

All cables and conductors used must meet CSA C22.2 requirements, as well as any other applicable fire and environmental ratings.

Further design considerations including wiring type and sizing criteria requirements are outlined in Section 9.0 of the *SS Electrical Equipment Manual*.

6.2.3.7 Bus Bar and Bus Connectors

Bus bars and bus connectors must be made of tin plated copper, and be sized as follows:

- For 700 V DC switchgear – 6000 A continuous
- For 13.8 kV AC switchgear – 1200 A continuous

6.2.4 Substation Controls

All substations must be equipped with a Programmable Logic Controller (PLC), local and remote control, annunciation systems, and smoke detection and intrusion alarm sub-systems.

The PLC system must be designed to integrate and control all switchgear functions, system monitoring and data logging. The PLC must communicate directly to the SCADA RTU that in turn communicates to the EPCOR Control Centre.

6.2.4.1 Local Annunciation

Local annunciation must be provided by the PLC display unit for the following functions:

- AC breakers status
- DC breakers status
- Rectifier diode alarm
- Rectifier diode trip
- Relay trip warning
- Status of control power
- Rectifier diode temperature alarm and trip
- Frame fault trip
- Rail overvoltage alarm and trip
- AC over/under voltage
- DC over voltage
- Rectifier over voltage
- DC door open trip
- Reverse current trip
- Tx winding temperature alarm and trip
- Rectifier over temperature alarm and trip
- Negative disconnect switch status
- Feeder and tie switch status
- Ground switch status

6.2.4.2 SCADA RTU

A dedicated fibre optic circuit from the LRT Communications backbone must be provided for communications with the EPCOR Control Centre to each TPSS for the following signals:

- Remote operation and status indication of all 15 kV breakers.
- 15 kV circuit breaker relays status/trip information.
- Remote operation and status indication of all DC circuit breakers.
- Rectifier negative disconnect switch position.
- Transformer over-temperature.
- Rectifier over-temperature.
- Rectifier fuse failure.
- Negative overvoltage.
- Utility power failure.
- Rail ground switch status.
- Feeder and tie switch status.

In addition the following building status information must be communicated from the BMS:

- Substation intrusion alarm
- Building inside temperature
- Fire alarm
- Manhole high water level

Fire alarms must be interlocked with the HVAC system as per the Alberta Building and Fire Codes. The Intrusion Alarm system must initiate indoor and outdoor building lights. Status and alarm signals may also be sent directly to monitoring locations at ETS facilities such as the LRT Control Centre at Churchill Station and the EPCOR Control Centre.

6.2.4.3 Smoke Detection Subsystem

All substations must be equipped with adequate smoke detectors and fire alarm systems. Ventilation and heating ducts will also include smoke detectors installed with automatic shut-off capabilities.

6.2.4.4 Intrusion Alarm

Standalone substations must be equipped with a full intrusion detection alarm system, with remote monitoring capabilities.

Integrated substations must have remote monitoring capabilities installed on all entrance doors.

Both types of TPSS must have all man doors equipped with a card reader (C-Cure system)

6.2.5 Protection Systems and Devices

The design of the TPSS must incorporate electrical system protective devices to mitigate damage to equipment and avoid hazards to personnel in the event of overloads, faults, and other abnormal conditions. A protection, coordination and arc flash study of various system protection devices must be conducted to ensure proper selection and settings for these devices and to determine the PPE requirements for safe operation of the equipment. Refer to Figure 6.4 for typical time current curves for the primary AC protection.

<u>AC Switchgear</u>

The following relaying protections must be included for each AC incoming feeder breaker;

- Phase inverse time and instantaneous overcurrent protection *(50/51P);

- Ground inverse time and instantaneous overcurrent protection (50/51N);
- AC undervoltage/overvoltage protection (27/59P)
- Loss of 125 V DC control voltage (27A)
- Transformer/Rectifier thermal overload relay (49)
- AC main lock-out relay (86)
- AC transformer and rectifier lockout relay (86A)
- Automatic transfer (83)
- AC overvoltage (59)
- AC breaker fail (50BF)

Note: Numbers in brackets are the IEEE Electric Power System device function numbers.

DC switchgear

The following relaying protections must be included for each DC feeder breaker;

- Direct acting DC instantaneous overcurrent trip device (76)
- Loss of 125 V DC control voltage (27A)
- DC instantaneous overcurrent (50D)
- DC feeder time overcurrent relay (151)
- DC rate-of-rise overcurrent relay (150)
- Delta I overcurrent relay (150/151)
- DC breaker fail (150/BF)
- Load measure and reclose relays (182, 183)
- Transfer trip relay (85)
- DC overvoltage (59D)

In addition, the DC switchgear must include the following;

- DC main breaker reverse current relay (32)
- DC main breaker direct acting DC instantaneous overcurrent trip device (76)
- DC main breaker fail (150BF)
- Primary frame fault relay (64A)
- Secondary frame fault relay (64B)
- Rail overvoltage relay (59T)
- Transformer door open trip (33T)
- Rectifier door open trip (33)
- DC lockout relay (86)
- DC rectifier transformer lockout relay (86D)
- PLC failure (74)
- Rectifier temperature trip (26R)
- Transformer temperature trip (49A/T)

6.2.6 Protection Relay Descriptions

6.2.6.1 Rail Over-Voltage Protection (Negative Ground Switch)

The track to ground potential must be monitored to ensure that public and right of way personnel are protected against unsafe rail to ground voltages. In the SLRT substations a negative ground switch and the substation PLC measure negative (rail) to ground voltage. The two devices offer the following staged protection:

- The ground switch will close if the negative to ground voltage exceeds 45 V for longer than five seconds. Above 60 V the switch will operate in 160 ms. If the voltage exceeds 100 V and is sustained longer than 360 ms the PLC will mass trip the substation and transfer trip to the adjacent substations.

On future LRT extensions the substation PLC must be designed with a time delay to ensure coordination with the negative ground switch.

6.2.6.2 Circuit Reclosing

In the event of a positive feeder breaker trip due to a momentary fault on the overhead catenary system, three attempts will be made to re-close the circuit. Through a resistance bridge the DC bus voltage is applied between the positive catenary line and negative rails. The relay compares the voltage across the bridge to a pre-set value and determines if it is safe to energize the OCS. In the case that the re-close attempts fail, the re-closing relay must lock out.

6.2.6.3 Reverse Current Protection (DC Rectifier Breaker)

A reverse current relay must be installed on the DC rectifier breakers to monitor possible back-feed current from adjacent substations. Defective rectifier diodes are the primary cause of reverse direction to normal current flow.

6.2.6.4 Rate-of-Rise of Current

The load currents on the LRT system are typically quite high and short lived (as the train passes by), but are predictable. One method to discriminate between load current and fault current is to measure the current rate of change. Typically, a very high rate of change indicates fault condition. The current rate-of-rise feature is used to detect distance faults with peak current values below the overcurrent settings. The device must be adjustable with respect to current and time, to allow certain loads to be picked up without interrupting the circuit.

6.2.6.5 DC Switchgear Frame Fault Protection

The frame fault protection grounds the DC switchgear through a single point monitored by an protection relay. The DC switchgear and rectifier must be isolated completely from ground using insulative materials. In the event the switchgear or the rectifier main bus faults to the frame, this protective relay will detect the fault sending a trip signal to the substation PLC. The PLC will initiate a mass trip, clearing all of the 15 kV AC and 1000 V DC breakers in the substation and send a transfer trip to the adjacent substations.

6.2.6.6 Rectifier Fuse/Surge Protection

Each rectifier unit will have current limiting fuses in series with a surge suppressor to protect the diodes. A device to detect fuse failure, and subsequently alarm both locally and through the SCADA system, will also be installed.

6.2.6.7 Rectifier Base Load Resistor

A base load resistor must be incorporated into the rectifier design to ensure the rectifier output voltage does not become excessive during periods of no load.

6.2.6.8 Transformer Thermal Protection

The rectifier transformers must utilize a two-stage thermal alarm and trip protection scheme. The protection device will alarm both locally and through the SCADA system.

6.2.6.9 Transfer Trip Protection

A protection trip of any DC feeder breaker must initiate a transfer trip to the breaker feeding the same OCS section in the adjacent substation. The new standard for existing adjacent substations is to have feeder 1 of one substation supplying power to the same OCS section that feeder 3 of the adjacent substation is supplying. Similarly, feeder 2 of one substation supplies power to the same OCS section as feeder 4 of the adjacent substation. When a substation is removed from service, the transfer trip protection shall communicate between the two adjacent substations supporting the OCS section with the substation out of service.

6.2.6.10 Emergency Trip Stations

Emergency trip stations must be provided in all substations. Activating the emergency trip station will trip the main incoming AC breakers and the DC feeder breakers. Operating the trip station will also send a transfer trip to the adjacent substations de-energizing the catenary on both sides of the substation. The emergency trip stations are to be located near each man door in an area that is easily accessible within the substations, and must be clearly identified as an emergency trip station. The trip station must be designed with a guarded pushbutton to prevent accidental operation of the button.

6.3 TRACTION POWER DISTRIBUTION SYSTEM

The TPDS consists of all feeder (positive and negative) conductors, switches, duct banks and associated hardware that feeds the DC power from the TPSS to the overhead catenary system.

6.3.1 Positive Feeder Cables

The DC feeder cables must meet the following minimum criteria:

6.3.1.1 Open Line Application

- Conductor size to be a minimum size of 500 kcmil stranded copper with ampacity as per system design.
- Insulation to be 2 kV AC/2.5 kV DC XLPE.

6.3.1.2 Tunnel Application

- Conductor size to be a minimum size of 500 kcmil stranded copper with ampacity as per system design.
- Insulation to be 2 kV AC/2.5 kV DC Low Smoke Zero Halogen (LSZH).

For additional guidelines refer to Section 3.1 of the *Overhead TP Manual*.

6.3.2 Negative Return Cables

The DC negative return cables must meet the following minimum criteria:

6.3.2.1 Open Line Application

- Conductor size to be a minimum size of 500 kcmil stranded copper with ampacity as per system design.
- Insulation to be 2 kV AC/2.5 kV DC XLPE.

6.3.2.2 Tunnel Application

- Conductor size to be a minimum size of 500 kcmil stranded copper with ampacity as per system design.
- Insulation to be 2 kV AC/2.5 kV DC Low Smoke Zero Halogen (LSZH).

6.3.3 Tunnel Parallel Feeder Cables

In the existing system, additional feeder cables are sometimes installed in tunnel sections to provide additional electrical support to the catenary system. Cables used in these situations must meet the following minimum criteria:

- All tunnel feeder cables will be of Low Smoke Zero Halogen (LSZH) construction.
- Conductor to be a minimum size of 500 kcmil stranded copper with ampacity as per system design.
- Insulation to be a minimum 2 kV AC/2.5 kV DC.

6.3.4 High Voltage AC Power Cables

The high voltage AC power cables must be 15 kV rated shielded cable, preferably armoured cable.

- The minimum allowable cable size is 1/0 AWG.
- Appropriate heat shrink or cold shrink stress cones must be used at cable ends.

6.3.5 Electrical Switches

The existing system has the Feeder and Tie switches mounted close to the catenary, usually on catenary masts. For the NLRT extension, these switches have been relocated to fibreglass cabinets located at the substation. They are interlocked with the associated feeder breaker to ensure that they cannot be operated under load conditions. If the fibreglass cabinets have metallic support structures inside, the supports must be grounded through a common frame fault relay (Device 64).

Both feeder and tie switches must have the following features:

- DC voltage and current rated.
- All copper current path.
- Non-load break, non-fused.
- Minimum short circuit and continuous current rating as specified by the TPS designer.

6.4 DUCT BANKS AND CONDUITS

The general design requirements for conduits and duct banks used in the TPS are based on:

- Underground supply feeders to be installed in min. 102 mm dia. concrete encased PVC duct.
- Tunnel supply feeders to be installed in min. 102 mm dia. FRE conduit.
- Tunnel parallel feeder to be installed in min. 51 mm dia. FRE conduit.
- At least one spare conduit should be installed for all positive feeder and two spare conduits should be installed for each negative circuit feeder with a minimum of three nylon pull strings in each spare duct.

For more specific information regarding TPS duct bank and conduit requirements, refer to Chapter 11 Electrical Systems, Section 11.13 and Sections 2.17, 2.18, 3.1 and 3.2 of the *Overhead TP Manual*.

6.5 OVERHEAD TRACTION POWER SYSTEM

6.5.1 Overview

The OTPS distributes DC power from substations to the LRVs operating on the mainline tracks, yard tracks and within shop or maintenance facilities. The OTPS primarily consists of the catenary system, the physical support subsystem and a feeder subsystem.

6.5.1.1 Overhead Catenary System

The OCS consists of the conductors, including the contact wire and supporting messenger wire, jumpers, fixed and auto-tensioned terminations, in-span fittings and associated hardware located over the track. It is from these devices that the LRV collects power by the contact between the pantograph and the contact wire (refer to Figure 6.5).

Edmonton's LRT system is electrified by a minimum of one 4/0 contact wire supported from and bonded to a single 4/0 messenger wire. In tunnel areas, the messenger wire runs separate from but parallel to the contact wire. In newer construction areas, the messenger wire size has been increased to 500 kcmil. Where the OCS has electrical support issues additional cable or wire may be installed overhead or underground. The current return circuit is via the rails.

In open route areas, the contact wire is suspended from a messenger wire centered over the track by wire clips and insulated brackets. In both underground tunnel and open route construction, the contact wire is staggered on either side of the pantograph centreline. The supporting brackets for tunnel construction usually alternate on either side of the centreline (refer to Chapter 3 Clearances and ROW, Figure 3.10).

6.5.1.2 Support Subsystem

The support subsystem consists of all the infrastructure required to keep the OCS in position above the track. This includes foundations, masts, guys, insulators, cantilever head spans, and any other assemblies and components required to support the catenary system. The support subsystem must adhere to the designed configuration and allowable loading, deflection and clearance requirements.

For more detailed information on the support subsystem refer to Sections 5, 6 and 7 of the *Overhead TP Manual*.

6.5.2 Design Philosophy

Consideration must be given in the design of the overhead catenary system to blending the appearance and style of the following elements into the adjacent communities as much as possible:

- Mast size, shape and colour
- Location of the mast

Design must include components that:

- Are standard and off-the-shelf, to reduce material and installation costs
- Have a proven maintenance performance
- Maintain functionality, even during extreme weather conditions and temperature changes

In addition, the design must include consideration for existing overhead obstructions such as bridges, overpasses, buildings and aerial utilities that may impact the final layout.

6.5.3 Design Requirements and Criteria

All applicable requirements from various Codes, Standards and Guidelines outlined in Section 6.1.4 of these guidelines must be considered in the design. Summaries of the design requirements are presented in the following sections. Included is a list of specific engineering studies that may be required.

6.5.3.1 Specific Engineering Studies

Specific studies that may have to be conducted as part of the engineering design process are:

- Behaviour of conductors, including conductivity, ampacity, tensile strength, and thermal effects.
- Stray current analysis and mitigation.
- Behaviour of supporting structures under static and dynamic loading.
- Electrical interference with electronics devices.
- Electrical interference with Health & Safety standards.
- Impact of LRV and TPSS noise in populated areas.
- Impact of LRT on traffic patterns in shared-right-of-way.

The need for any of these studies will be determined jointly with ETS.

6.5.3.2 OCS Design Operating Speed

Speed criteria to be used in the design of the OCS is shown below: For specific OCS speed information, see Sections 5.1 and 5.2 of the *Overhead TP Manual*.

<u>LRV Mainline</u>

Maximum design speed:	90 km/h
Maximum train speed	80 km/h
Normal maximum operating speed:	70 km/h

<u>LRV Maintenance and Storage Yard</u>

Maximum design speed:	30 km/h
Normal yard operating speed:	10 km/h (Test track is 40 km/h)

Note: OCS speed criteria differs from speeds stated in Chapters 2, 4 and 5 for LRV and Work Train speed criteria. The speed criteria given in those chapters relate to track design.

<u>Critical Speed</u>

Critical Speed is defined as the LRV speed at which resonance is generated on the catenary wires resulting in uncontrolled vertical movements of the pantograph.

The catenary system must be designed so that the critical speed is in excess of 100 km/h. Reduced critical speed is allowed in areas such as crossovers that have a restricted operating speed. In these areas, the critical speed must be at least 1.5 times greater than the posted vehicle maximum speed.

6.5.3.3 Temperature

Catenary equipment should be designed for an average ambient temperature of 0°C.

The ranges of limiting temperatures for the various LRT operating sections are:

Open Route:	-40°C to +40°C
Long Tunnel:	-20°C to +20°C
Short Tunnel:	-35°C to +30°C

***Note:** The above temperature ranges for tunnel sections are approximate and may not be representative of the actual temperatures that are dependent on tunnel length, depth, proximity to passenger stations and portals and whether or not both tunnels are open ended.

6.5.3.4 Pantograph

The pantograph is the current collector mounted on top of the LRV. This spring loaded device produces a constant upward force on the contact wire throughout its operating range. The response to changes in elevation deteriorates in the lower operating ranges. New pantographs, differing from those mounted on the U2 LRVs, will be used on the new SD-160 LRVs.

The general operational characteristics for the U2 LRV pantographs are:

Nominal static upward force:	70 N
Standard operating range:	4070 mm to 6880 mm above TOR
Height of pantograph in the down position:	3680 mm above TOR
Total length of carbon strip:	960 mm (operating width)
Total length of pantograph:	1700 mm
Total width of carbon strip:	34 mm
Total depth of carbon strip:	19 mm

The general operational characteristics for the SD-160 LRV pantographs are:

Nominal static upward force:	93 N
Standard operating range:	3960 mm to 6880 mm above TOR
Height of pantograph in the down position:	3785 mm above TOR
Total length of carbon strip:	1081 mm (operating width)
Total length of pantograph:	1700 mm
Total width of carbon strip:	60 mm
Total depth of carbon strip:	19 mm

The design of the overhead contact wire layout must consider the dynamic movement of the LRV in accordance with the Design Vehicle Dynamic Envelope (refer to Figures 3.2A and 3.2B). The required clearances of the LRV at the catenary supporting structures and in space-restricted areas, such as tunnels, must be met.

Refer to Section 4 and 5.4 of the *Overhead TP Manual* for additional information.

6.5.3.5 Conductor Characteristics

Edmonton's LRT system uses 4/0 copper cadmium (alloy 80) wire for contact wire. It provides good conductivity and high tensile strength. The messenger wire is a minimum 4/0 stranded hard drawn copper. New construction uses a minimum 500 kcmil messenger wire. In some sections a separate parallel messenger wire is used to provide increased electrical support for the system.

Refer to Section 3 of the *Overhead TP Manual* for additional conductor guidelines and criteria.

6.5.3.6 Design Safety Factors

The design must ensure that the system will not be overloaded or suffer from structure failure. The minimum requirements outlined in CSA C22.3 No. 8, and CSA C22.3 No. 1 pursuant to the Alberta Electrical Utility Code must be met or exceeded.

For additional details refer to the table "Minimum Design Factors of Safety for New LRT Construction" contained in Section 5.8 of the *Overhead TP Manual*.

6.5.3.7 Contact Wire Height

The pantograph operating range dictates the allowable range of contact wire heights. The absolute minimum contact wire height above TOR must be 4200 mm and meet the requirements outlined in CSA-C22.3 No. 1 & No. 8, pursuant to the Alberta Electrical Utility Code. Contact wires must be installed within the standard maximum and minimum nominal heights lists. If special circumstances require the contact wire to be outside of this range, speed restrictions may be necessary.

Absolute Minimum Contact Wire Height:	4200 mm above TOR
Standard Normal Operating Contact Wire Height:	5500 mm above TOR
Minimum Contact Wire Height at Road Crossings:	5700 mm above TOR
Maximum Nominal Contact Wire Height:	6500 mm above TOR

Refer to Section 4.0 and 5.11 of the *Overhead TP Manual* for additional details.

6.5.3.8 Contact Wire Gradient

The contact wire gradient is defined as the rate of change in elevation of the contact wire with respect to the TOR. Where possible, the contact wire grade should match the grade of the track for a contact wire gradient of zero.

The following table presents the recommended maximum gradient as per CSA C22.3 No. 8. The gradient must not exceed 2.0% (1:50), under any circumstances.

Speed	Max. Gradient
Yard (10 km/h)	2.0% (1:50)
50 km/h	1.3% (1:77)
75 km/h	0.8% (1:125)
90 km/h	0.67% (1:150)

6.5.3.9 Clearances

Electrical Clearances

Electrical clearances must meet all applicable code requirements and should satisfy the operational limits of the LRVs and related maintenance equipment. Refer to the applicable figures in Chapter 3 Clearances and Right-of-Way (for the various clearance requirements discussed below) along with Figure 6.6. Also refer to Section 4 of the *Overhead TP Manual*.

Mechanical Clearances

- Catenary locations are fixed and are entirely dependent on track alignment.
- A considerable number of mounting brackets are required. This is a consideration for locating civil, architectural, and mechanical equipment particularly in tunnels.
- Space above the LRVs and below the tunnel or structure ceiling is reserved for catenary installations. Equipment being considered for installation in this space must be coordinated with and approved by the OTPS designer.
- Pipes, ducts or cables approved for installation on the ceiling must cross at right angles to tracks on the ceiling.

Equipment Restrictions

- Non-traction power equipment must not be installed above the catenary.
- Non-traction power equipment close to the 700 V DC overhead wires must have adequate clearance from energized parts in order to provide adequate safety to personnel and avoid the need for de-energization.

- If non-traction power equipment has been installed above the OCS, maintenance or repair of this equipment will require de-energizing of the overhead wire system to gain access and may require removal of the catenary.

Underground Utility Clearances

- Minimum clearances between LRT mast and anchor foundations and underground utilities must comply with CSA C22.3 No. 7 and the Alberta Electrical Utility Code.
- Recommended clearances are shown in Section 4.3 of the *Overhead TP Manual*. Where there is a difference between the manual and the code, the higher clearance must govern.

If minimum clearances cannot be met, the Designer must coordinate clearances with the utility agency early in the design stage.

Mast Clearances on Tangent Track

- The minimum clearance from centreline of track to face of mast must be *2070 mm.
- The minimum clearance to balance weights on mast in swing position must be *1995 mm.

***Note:** The track separation (center to center) has been reduced from 4570 mm (N.E. Line) to 4500 mm for the SLRT extension. In addition the clearance distance from centerline of track to the face of catenary mast has been reduced from 2170 mm to 2070 mm. This reduction will allow for variations in mast diameter and installation tolerances. The absolute minimum clearance distance from centerline of track to the BWA has also been reduced from 2040 mm to 1995 mm. A wider separation is preferred, space permitting. (Space was initially set to ensure that a person was clear of the mast and the LRV if caught in the middle).

Mast Clearances on Curved and Super-elevated Track

Additional clearance to that stated for Tangent Track is required on curves to account for out swing of vehicle ends, for in swing of vehicle between tracks and for vehicle cant from track super elevation (refer to Chapter 3, Clearances and Right-of-Way, Section 3.3.2).

6.5.3.10 Spacing Span Lengths

The OCS designer must determine the applicable span length on tangent and curved tracks as per CSA C22.3 No. 8 clause 5.3.2.

Additional factors and criteria that must also be considered in the design are outlined in Section 5.17 of the *Overhead TP Manual*.

6.5.3.11 Stagger & Displacement

In general, the contact wire is supported over the track and is staggered a maximum of 250 mm on either side of the pan centreline. Stagger is required to evenly distribute wear across the pantograph's carbon current collector. When identifying the stagger limits, the dynamic effect (horizontal movements) of the pantograph when it is extended higher than 5500 mm from TOR, must also be considered.

Refer to Sections 5.14 and 5.15 of the *Overhead TP Manual* for additional factors and design criteria.

6.5.3.12 Overlap Transition Spans, Crossovers and Turnouts

An overlap transition span is an area where one catenary tension section ends and another begins and the LRV pantograph makes a transition between them. Both tension lengths are anchored out of running in-board or out-board of the tracks. The overlap arrangement must be designed to provide a smooth transfer of pantograph from one contact wire to the next over a standard overlap length of 2 m. This overlap region is referred to as the transition span. More information is available in Section 5.21 of the *Overhead TP Manual*.

For catenary serving track crossovers and turnouts the wires must be mechanically independent of main line tension section. The design must ensure that the following requirements are met:

- At cross-overs (track switches), a separate tension length is required for the cross-over track.
- The cross-over tension length must run parallel with the main line in an overlap region and then be anchored out of running either inboard or outboard of the tracks.
- Catenary transition span masts beside track crossover switches must be precisely located to ensure that contact wires have correct alignment across the crossover.
- Section isolators located in crossover movement must provide adequate clearance from crossing pantograph.
- Catenary support masts must be adequately set back from the divergent track, ensuring sufficient clearance envelope for the movement of the train (refer to Section 6.5.3.9, Clearances).

See Section 5.37 of the *Overhead TP Manual* for additional information on track crossovers and turnouts.

6.5.4 Details of Overhead Catenary System

6.5.4.1 Tensioning Systems in Use

Simple Catenary Auto Tension System (SCAT)

The SCAT system consists of a single messenger wire supporting the contact wire, which is hung underneath. The same amount of tension throughout its tension length is maintained by the use of BWA's or spring tensioners. The wire is fixed at mid-length by a mid-point assembly (MPA) so that shifting to either end of the line cannot occur.

The current ETS standards for tensioning systems are:

- For open-line construction – the tension on the simple catenary system with balance weights is constant at 1100 kg and 1300 kg, for messenger and contact wires respectively.
- For tunnel construction – the tension on the contact wires with balance weights is constant at 1050 kg or ranges from 600-1000 kg where a spring tensioner is used.

In addition to the forgoing, the design tensile strength of both the messenger and contact wires must not exceed 50% of the rated ultimate tensile strength.

SCAT open line catenary systems provide more predictable dynamic characteristics and are typically more reliable than the variable tension open line systems constructed with fixed dead ended wires as described below.

Variable Tensioning Systems (Fixed Tension System)

This system differs from the SCAT system as it allows the wire to change its tension as a result of temperature variation. It is an acceptable method of construction in long tunnel applications with narrow ambient temperature range and short contact wire spans. It is not recommended for open line construction and its use should be limited to areas where auto-tensioning is not possible and environmental conditions minimize wire tension changes.

Another fixed tension system implemented on the South LRT extension to Century Park and in NE system upgrades involves adding a second messenger wire to the normal SCAT design to provide improved power and voltage support. This second messenger wire is attached on the catenary poles and is fixed tensioned.

6.5.4.2 Wire Tension

The Designer must consider the following factors when establishing the wire tensioning system to be used and the related wire tension.

- The allowable maximum operating speed of the system is limited by the critical speed, which is directly proportionate to the wire tension.
- The ability of wind to blow the contact wire off the pantograph (wind blow-off effect) which is directly related to tension in the contact and catenary messenger wires.

6.5.4.3 Wire Tensioning Equipment

The wire tensioning system must be designed to an ultimate design loading of five car SD-160 trains and five car U2 trains operating at five minute headways. The wire tensioning system can consist of either balance weight assemblies or spring tension equipment, as specified by the Designer. Wire tensioning assemblies are to be mounted out of running one span away from the overlap transition span, either in-board or out-board of the tracks, supported with standard anchorage assemblies. The designed tension length must be limited by the available spring or balance weight operating ranges and the rotational range of the other catenary support arms.

Refer to Section 5.23 of the *Overhead TP Manual* for more specific details on wire tensioning equipment.

<u>Balance Weight Assemblies (BWA)</u>

The BWA is a mechanism that maintains constant tension on the catenary wires while accommodating wire expansion/contraction due to temperature fluctuations. The current standard balance weight tensioning equipment is a tension wheel assembly that utilizes different diameter drums to produce a 3:1 mechanical advantage. The balance weight required is one third of total line tension supported and vertical movement of the balance weight stack is 3 times greater than thermal expansion of attached catenary wires.

<u>Spring Tensioners</u>

Spring tensioners are suitable only for very short tension lengths, such as crossovers, where there is a speed restriction. To facilitate installation they are typically installed with turnbuckles on the mast side of the line insulator.

The current ETS standard is Siemens size 120 and 180 tensioning springs. These assemblies provide variable wire tensions lower than the standard constant contact wire tension of 1300 kg achieved by the balance weight systems. Spring tension is typically in the range of 600 kg to 1000 kg depending on the ambient temperature.

6.5.4.4 Midpoint Anchors (MPA)

The mid-point of each tension section must be sufficiently anchored to restrict cantilever arm rotation. The midpoint anchor functions as the end anchorage point for each balance weight tension length and is essential for the proper operation of the automatic tensioning equipment.

Refer to Section 5.22 of the *Overhead TP Manual* for additional guidelines and details pertaining to midpoint anchors.

6.5.4.5 Terminations or Dead Ends

Catenary wires can be terminated or dead ended on freestanding or anchored poles, retaining walls, buildings or bridge structures. There are two types of terminations:

- Fixed termination – where the wires are attached directly onto supporting structures via a two level insulator assembly.

  Note: Special attention must be given to wires that terminate on structures that are occupied by the public or are vehicular or pedestrian traffic bearing. All safety issues must be examined relative to structural, electrical and mechanical clearance requirements.

- Constant tension termination – where the wires are connected to a set of weights that hang from a pulley system. Also known as an auto tension termination.

Insulation for all wire terminations or dead ends must comply with the following requirements: Double insulation points must be provided for all catenary wire terminations. Consideration should be given to avoiding functional interference with servicing equipment used for maintenance purposes. Dead end and associated structures at end of line are to be located with consideration of future expansion. These structures should not conflict with the future track's Design Vehicle Running Clearance Envelope, where possible.

Refer to Section 2.10 and 5.24 of the *Overhead TP Manual* for additional guidelines.

6.5.5 Overhead Catenary System Configurations

6.5.5.1 Tension Length and Tension Section

Tension Section

- The tension section is defined as length of wire between two BWA's that keep the catenary wires at constant tension. A midpoint anchor is installed at the middle of the tension section to partition the tension section into two tension lengths.

Tension Length

The tensioning length is the length of catenary wire between the MPA (or fixed termination) and the tensioning device (BWA or spring). The tension length is restricted by the following:

- The allowable thermal expansion of the contact and messenger wire.
- The height of the support mast and maximum vertical displacement for the BWA.
- Steady arm rotation.
- Tension limits on the wires.

The Designer must specify the maximum length of a tension length for all new catenary installations with due consideration for the effects of conductor heating under the ultimate design loading of five car SD-160 trains or five car U2 trains operating on a five minute headway.

6.5.5.2 Spans

In general, the maximum span allowed should be 55 m. The span, of either tangent or curved lines, can be determined using the following limiting factors:

- Contact and messenger wire tensions
- Contact wire displacement limits and allowable wind blow-off
- Minimum separation of 150 mm between messenger and contact wire at midspan
- Radial loads on structures in curve
- Cost considerations based on structure and foundation sizing, quantity and labour effort for supporting structures on tangent line

For tunnel construction, the maximum allowable spacing between the elastic supports is 11 m. For more details on spans, see Section 5.17 in the *Overhead TP Manual*.

6.5.5.3 System Depth

System depth is defined as the separation between the messenger and contact wires at the point of support. The nominal depth of the existing system is 900 mm with 4/0 messenger and 1600 mm with 500 kcmil messenger.

For the design of future LRT extensions, this nominal depth may vary depending on wire size, wire tensions and minimum separation between contact and messenger wires at mid-span.

6.5.6 Catenary Support Components

As the LRT is extended into a more urban setting adjacent to established residential communities, the Consultant must recognize the need to blend and integrate the catenary support components into the surrounding environment. The objective is to make supports as unobtrusive as possible (refer to Section 6.5.2 Design Philosophy and Chapter 14, Impact Mitigation, Aesthetics, ROW Control).

An overview of the general design guidelines for the variety of components that are required to support the catenary is presented in this section. Sections 5 and 6 of the *Overhead TP Manual* provide additional detailed guidelines and criteria on this topic.

6.5.6.1 Masts

Octagonal, square or I shaped masts are used to support the overhead catenary wire on the existing LRT system. It should be noted that a number of different styles of masts are installed on the existing open LRT line. A description of each is provided in Section 6.11 of the *Overhead TP Manual*.

On future LRT extensions where aesthetic considerations are a major issue, the Designer must evaluate other alternative shapes.

Corrosion due to road salt and condensation is highly problematic. Mast designs must include provision for drainage of moisture from any hollow sections. All mast and related elements must be galvanized inside and out to prevent corrosion. Normally masts are not painted. However if the mast is to be painted, due to aesthetic requirements, then the selected paint long term durability and method of application has to be carefully reviewed. The painting shall comply with the City of Edmonton painting standards.

Masts can be located between or on the outside of the tracks (refer to Figure 6.7).

<u>Standard Classes of Masts</u>

Mast design requirements vary by application on tangent or curved sections for different loads such as;

- Class I – Single cantilevers
- Class II – Double cantilevers
- Class III – Weight tensioning and dead end structures
- Class IV – Double arm transition span structures

Masts must be designed in different strength classes as required to optimize the economics of the system. The number of different mast designs must be limited by practical considerations for simplicity and flexibility in application.

Refer to Section 6.4 of the *Overhead TP Manual* for additional guidelines.

<u>Design Loads</u>

LRT masts must be designed to withstand the following load conditions:

- Effect of gravity acting on all components.

- Wind acting on wires, cantilever arms, and the mast shaft.
- Ice accumulation on wires.
- Longitudinal, radial and stagger components of wire tension.
- Dynamic effects.
- Extreme variations in temperature.
- Erection and maintenance considerations.

Design loads must be applied in combination to produce maximum stress levels. In addition, the masts are required to support these loads without yielding, fracturing, or shearing. The effects of Euler buckling must also be considered in the design. Masts must be designed with sufficient reserve capacity to allow the future installation of additional loads that may be introduced as the LRT system is extended or service is expanded.

Refer to Sections 5.7 and 5.8 of the *Overhead TP Manual* for additional design and related Factors of Safety criteria.

Mast Deflection Limits

Masts must be designed with an adequate level of stiffness to ensure reliable operation of the LRVs under dynamic conditions. The calculation of the deflection due to dynamic conditions must be based upon un-factored loads.

Refer to Section 6.3 of the *Overhead TP Manual* for additional design guidelines.

Standard Mast Details

A detailed description and related criteria for the standard mast is presented in Section 6.6 of the *Overhead TP Manual*.

*Mast Foundations/Anchor Bolts

Standard mast foundations must be designed as drilled, cast-in-place, steel reinforced concrete piles with anchor bolts to attach to the mast. Anchor bolts, nuts, and washers must be galvanized. A soils investigation must be carried out prior to the foundation design. Mast bases must have provisions to level the mast and provide a drainage port for any water buildup inside the mast.

Standard LRT mast and anchor foundations must be designed with four anchor bolts for attaching the structure to the concrete base. Anchor bolts must be constructed from high strength round steel bars. The mast designer must specify the material grade and diameter.

Anchor bolts must be designed such that the mast shaft will yield in bending without over loading or tensile failure of the anchor bolts.

The anchor bolts must be designed to support the mast anchors directly bearing on the concrete surface. Prior to placement, all anchor bolt assemblies must be dimensionally tested with an accurate base plate template in order to confirm that the bolt pattern matches the mast base plate hole pattern.

***Note:** The mast foundation designer must coordinate with the OCS mast designer early in the design phase to ensure that the foundation, mast to foundation fastening devices and masts are properly interfaced.

Further and more detailed design guidelines and criteria are presented in Section 7.0 of the *Overhead TP Manual*.

Mast Anchors

Mast anchors are used to provide the additional resistance to bending for masts that support longitudinal loads from wire ends and wire tensioning equipment. Further design guidelines and criteria are presented in Sections 6.9 and 7.10 of the *Overhead TP Manual*.

6.5.6.2 Cantilever Arm Assemblies

Typically, cantilever arms are clamped to the masts and are used to carry the overhead catenary wires. There are several types of standard cantilever arms. The type to be used is dependent on the LRT operating condition.

Further design guidelines and criteria are presented in Section 5.30 of the *Overhead TP Manual*.

6.5.6.3 Span Wires

In shop, service yards, tunnels, tight curves and other locations where space is limited, the overhead contact (energized) wires can be suspended from steel span wire. Depending on the application, head span or crossover spans may be used. Backbone span wires are used in the North LRT extension to support pull-offs through small radius curves.

Further design guidelines and criteria are presented in Section 5.29 of the *Overhead TP Manual*.

6.5.6.4 Attachments to Grade Separation Structures

Grade separations are generally of two types. The first is the arrangement where the LRT is at grade and a vehicular or pedestrian bridge passes over it. In this instance the crossing structure is generally referred to as an overpass or flyover.

The second condition is where the LRT is routed below the surrounding ground level or grade to underpass a structure carrying vehicular and pedestrian traffic. The structural design requirements are outlined in Chapter 9, Structures.

<u>Design Considerations</u>

- Care should be taken in the design to isolate any electrified components from any structures or supports.
- All attachment wires must have at least two levels of insulation.
- Any conductors attached to the roof of a structure must be mounted opposite to any walkway.
- A non-conducting material such as plastic sheeting must be considered for installation between the underside of the bridge deck and the LRT energized wires.
- The potential for the contact wire swinging from its normal position should be mitigated.
- All electrical clearances must be as per CSA C22.3 No. 8 and CSA C22.3 No. 1 pursuant to the Alberta Electrical Utility Code.
- All exposed metal must be securely grounded.
- Provision for protective screening where pedestrians are in close proximity to the OCS.

<u>Protective Screening Device</u>

Where the LRT is constructed below bridge structures or buildings, screening and/or fencing must be provided where wires enter and leave the structure. This screening is to protect the catenary wire and LRT trains from damage and to protect the public from accidental contact with an energized wire. A minimum 3 m limit of approach for pedestrians is required (refer to Figure 6.6).

- All materials used to fabricate the screening device (mesh, etc.) must be constructed of galvanized steel and properly grounded (refer to Figure 6.8).
- The screen should be painted to match the color of the building or bridge structure in order to blend in with the surrounding environment as much as possible.

6.5.7 In-Span Assemblies

In-span assemblies are additional devices that are required to make the OCS functional. They include the following major components:

6.5.7.1 Dropper Wires

Dropper wires, or hangers, are used to suspend the contact wire from the catenary messenger wire in a flat profile. The Designer must ensure the contact wire is supported evenly throughout the span. The dropper wires are to be isolated so that they do not create a conductive path between the contact and messenger wires.

Further design guidelines and criteria are presented in Section 5.19 of the *Overhead TP Manual*.

6.5.7.2 Equalizing Jumpers

Equalizing jumpers, also known as in-span jumpers or catenary bonds connect the contact wire to the messenger wire at a standard spacing along the alignment. Their primary purpose is to ensure that ampacity, voltage drop and wire heating are all within design limits.

The design must ensure the following requirements are met:

- A sufficient number of jumpers are provided to satisfy the electrical requirements of the system, ie. ampacity, voltage drop, wire heating, etc.
- The jumpers are placed at a maximum spacing of 55 m and are at least 2 m from any suspended equipment on the contact wire.
- The jumpers conductivity must be the same or higher than the contact wire.
- Jumpers must not be installed at locations near section isolators or splices. This type of installation can create hard spots in the system that may cause damage to the pantograph or any nearby equipment. Contact wire wear is also a factor at these hard spots.

Further design guidelines and criteria are presented in Sections 2.12 and 3.6 of the *Overhead TP Manual*.

6.5.7.3 Electrical Switches

Tie switches, also known as continuity jumpers, are normally open switches that connect two adjacent catenary circuits when in the closed position. Tie switches are normally located near section isolators.

Feeder switches provide a disconnect point between the substation and the OCS. Each feeder switch connects to a specific positive electrical circuit. These switches are normally located as close to the substation as possible to reduce cable lengths.

Both feeder and tie switches must have the following features:

- DC voltage and current rated.
- All copper current path.
- Non-load break, non-fused.
- Minimum short circuit and continuous current rating as specified by the TPS designer.

The existing system has these switches mounted close to the catenary, usually on catenary masts. For the NLRT extension, these switches have been relocated to cabinets located at the substation. They are interlocked with the associated feeder breaker to ensure that they cannot be operated under load conditions.

The NLRT arrangement is preferred for future TPSS locations with pole mounted switches only being used in special circumstances, such as crossovers.

Further details regarding switches can be found in Section 2.14 of *Overhead TP Manual*.

6.5.7.4 Section Isolators

Where two adjoining positive overhead contact wire circuits meet, a section isolator is used to electrically separate them from each other. A tie switch must be installed across the section isolator in order to connect to the two adjacent circuits during abnormal conditions, such as substation maintenance, etc.

Section isolators must not be installed in an LRV acceleration zone to ensure that power is constantly provided to the LRV during its acceleration period.

Further design guidelines and criteria are presented in Section 2.15 and 5.38 of the *Overhead TP Manual*.

6.5.7.5 Splices

A splice is a mechanical device used to connect two wires together. The use of catenary splices must be minimized. If splices are required on contact wires, they must not be installed near any catenary support structures.

The splice must meet the following general requirements:

- Electrical – Rated ampacity equal to or greater than the conductor.
- Mechanical – equal to or higher tensile strength than that of the wire.

Additional guidelines and criteria are presented in Section 2.19 of the *Overhead TP Manual*.

6.5.7.6 Conductors and Related Devices

The Designer must ensure that the selected conductors possess the characteristics that meet the required design standards for ampacity, resistance, insulation level, tensile strength, etc. These standards are documented in Section 3.0 of the *Overhead TP Manual*.

6.5.7.7 Surge Protection

Surge protection devices, referred to as surge or lightning arrestors, must be installed to protect electrical equipment in substations and on the Traction Power System in the event of electrical current surges and lightning strikes. All lightning arrestors installed in the ROW must be complete with a surge counter mounted at eye level.

Surge protection guidelines and criteria are presented in Section 2.11 of the *Overhead TP Manual*.

6.5.7.8 Structure Grounding and Bonding

The LRT traction power electrical system is an ungrounded (floating) system except for the D.L. MacDonald Maintenance Yard and Shop tracks, which are grounded.

In general, grounding is required for the following elements:

- All structures within the LRT system.
- Catenary mounting hardware.
- All utilities encased in metal conduit in tunnels

The existing system makes use of a continuous ground runner bonded to each support structure to provide grounding. For the NLRT extension, a separate ground will be provided at each structure using ground rods. The maximum allowable resistance for catenary masts is 10 Ω. A separate ground will also be provided for all lightning arrestors and the maximum

resistance will be 5 Ω. Further design guidelines and criteria are presented in Section 2.13 of the *Overhead TP Manual*.

6.5.7.9 Protective Grounds

Protective ground points, also referred to as “temporary” grounds are used for grounding the catenary wires during maintenance or repairs. The protective ground points must be installed at feeder switches, tie switches and sectionalizing switches.

Further design guidelines and criteria are presented in Section 2.13 of the *Overhead TP Manual*.

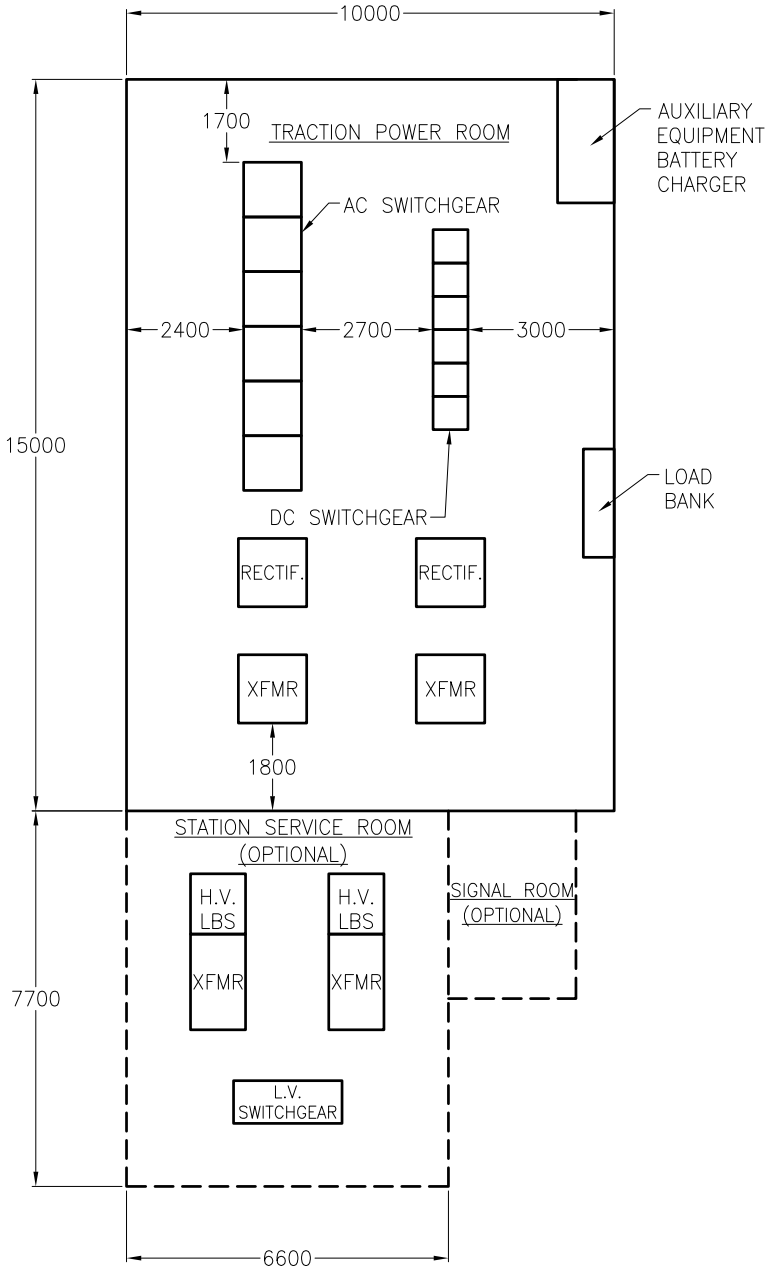

NOTES:

DIMENSIONS ARE APPROXIMATE AND SUBJECT TO VERIFICATION.
LAYOUT FOR TPSS CONSTRUCTED BETWEEN UNIVERSITY AND CLAREVIEW LRT STATIONS.
EXTENSIONS TO TRACTION POWER SUBSTATIONS TO PROVIDE STATION ELECTRICAL SERVICE AND SIGNAL ROOMS IS OPTIONAL. (TO BE DETERMINED DURING PRELIMINARY DESIGN).

ABBREVIATIONS:

H.V. – HIGH VOLTAGE
L.V. – LOW VOLTAGE
LBS – LOAD BREAK SWITCH
RECTIF. – RECTIFIER
XFMR – TRANSFORMER

		FIGURE 6.1A	CHAPTER 6
		TYPICAL TPSS AND EQUIPMENT LAYOUT ORIGINAL LINE	TRACTION POWER
26–JAN–17	TITLE		
Date	Revision		

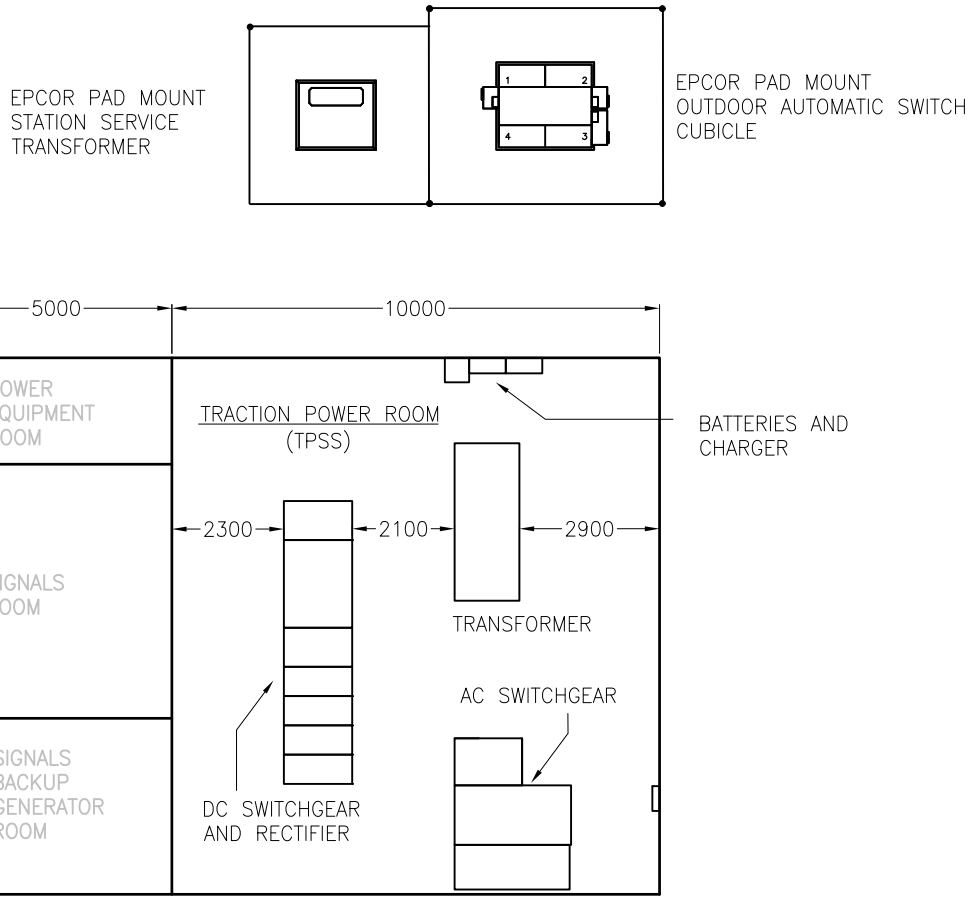

NOTES:

DIMENSIONS ARE APPROXIMATE AND SUBJECT TO VERIFICATION. EXTENSIONS TO TRACTION POWER SUBSTATIONS TO PROVIDE STATION ELECTRICAL SERVICE AND SIGNAL ROOMS IS OPTIONAL. (TO BE DETERMINED DURING PRELIMINARY DESIGN).

		FIGURE 6.1B	CHAPTER 6
		TYPICAL UTILITY COMPLEX WITH TPSS AND EQUIPMENT LAYOUT SLRT EXTENSION	TRACTION POWER
26-JAN-17	TITLE AND NOTES		
Date	Revision		

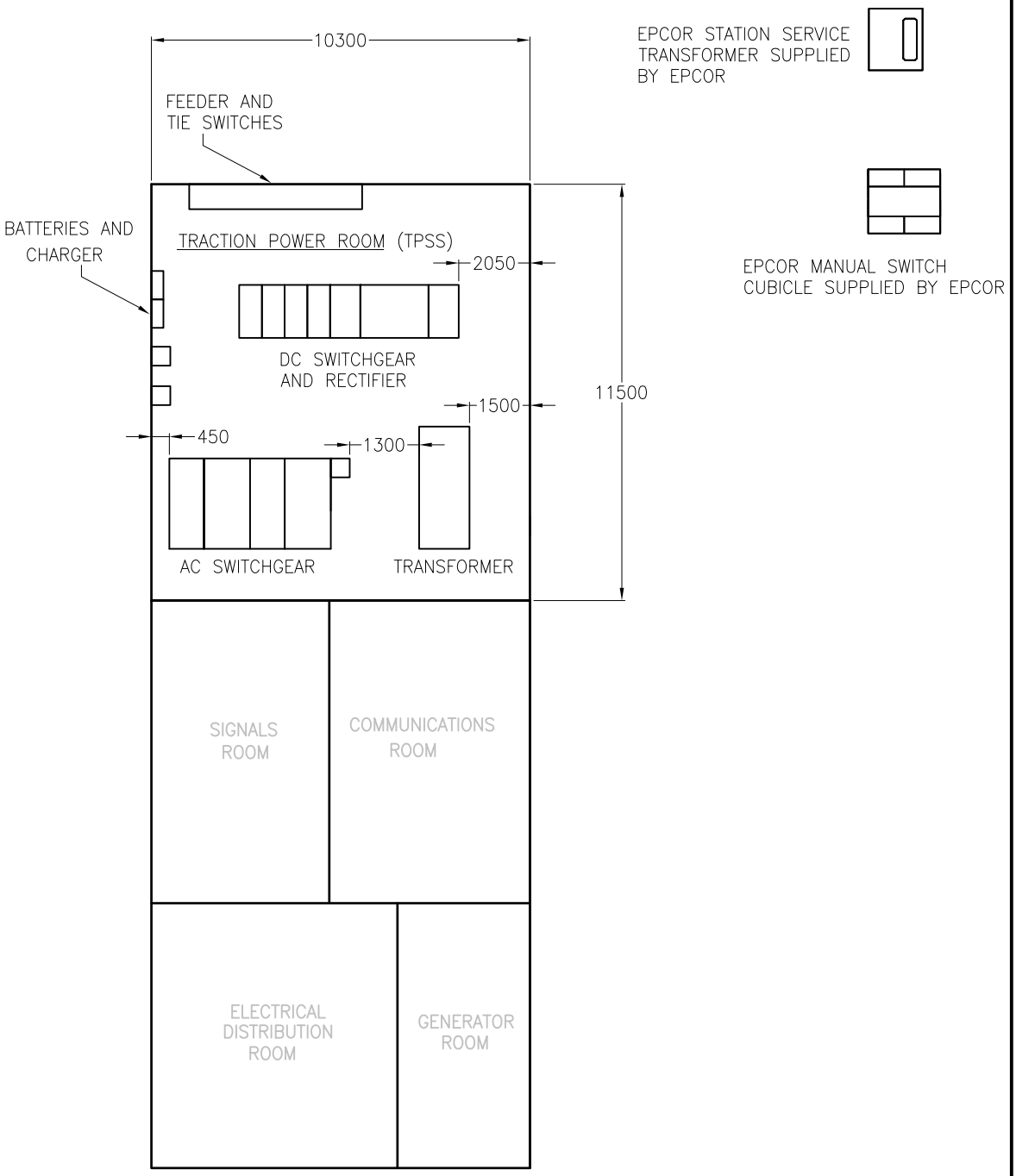

NOTES:

DIMENSIONS ARE APPROXIMATE AND SUBJECT TO VERIFICATION. EXTENSIONS TO TRACTION POWER SUBSTATIONS TO PROVIDE STATION ELECTRICAL SERVICE AND SIGNAL ROOMS IS OPTIONAL. (TO BE DETERMINED DURING PRELIMINARY DESIGN).

		FIGURE 6.1C	CHAPTER 6
		TYPICAL UTILITY COMPLEX WITH TPSS AND EQUIPMENT LAYOUT NLRT EXTENSION	TRACTION POWER
26-JAN-17	TITLE / LABEL		
Date	Revision		

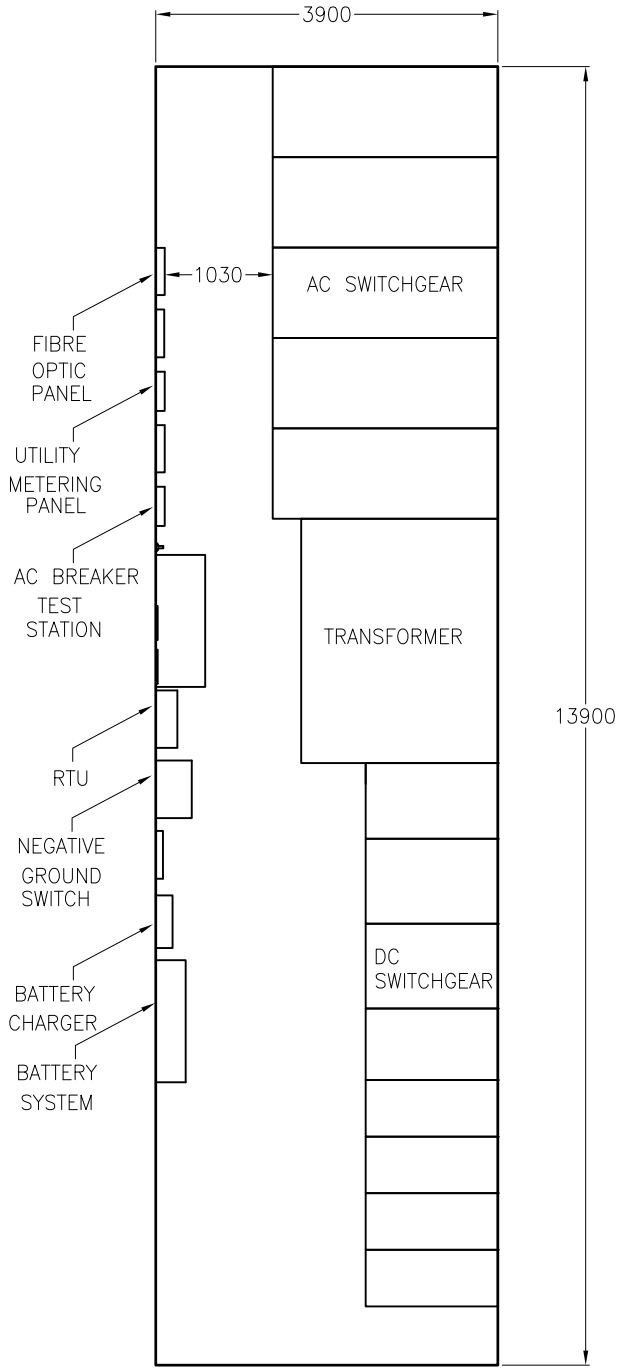

NOTES:

DIMENSIONS ARE APPROXIMATE AND SUBJECT TO VERIFICATION.

		FIGURE 6.1D PORTABLE TPSS AND EQUIPMENT LAYOUT NLRT EXTENSION	CHAPTER 6 TRACTION POWER
Date	Revision		

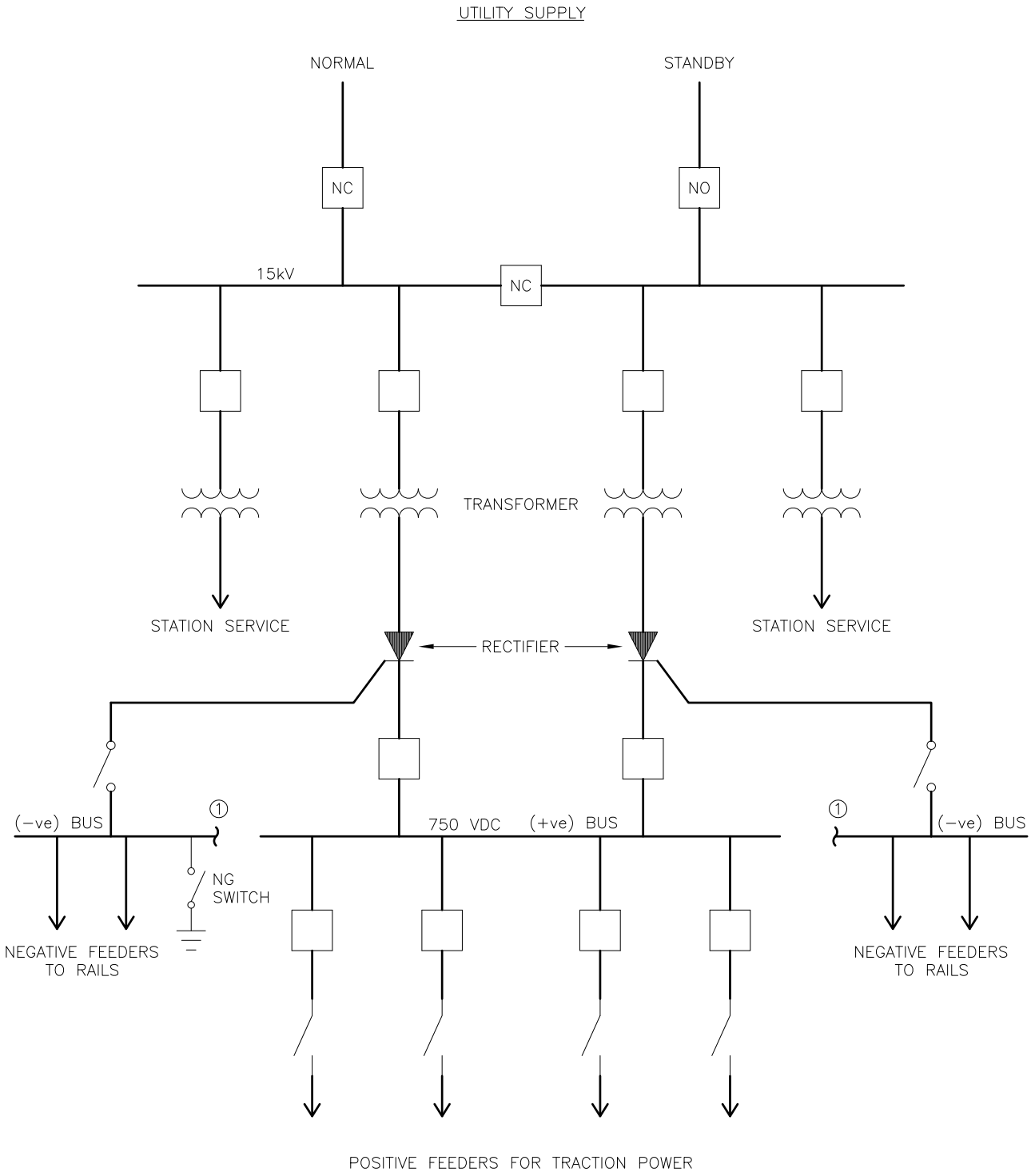

NOTES:

ALL CIRCUIT BREAKERS TO BE WITHDRAWABLE TYPE.
APPLICABLE FOR TPSS'S CONSTRUCTED BETWEEN UNIVERSITY AND CLAREVIEW LRT STATIONS.

		FIGURE 6.2A	CHAPTER 6
		TYPICAL POWER DISTRIBUTION SINGLE LINE DIAGRAM ORIGINAL AND CRITICAL TPSS	TRACTION POWER
26-JAN-17	TITLE		
Date	Revision		

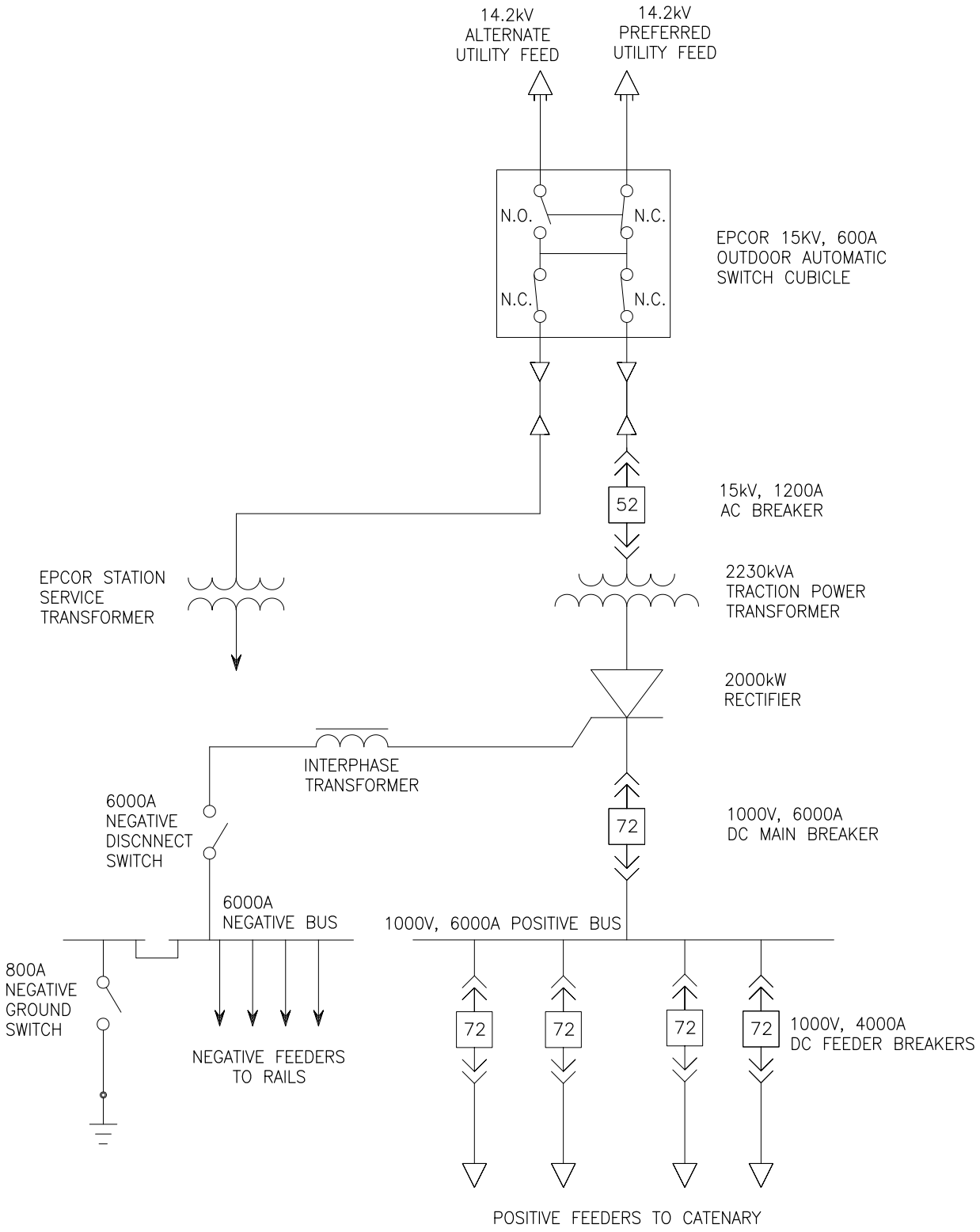

		FIGURE 6.2B TYPICAL POWER DISTRIBUTION SINGLE LINE DIAGRAM SLRT EXTENSION	CHAPTER 6 TRACTION POWER
26-JAN-17	NOTES, DETAILS ADDED		
Date	Revision		

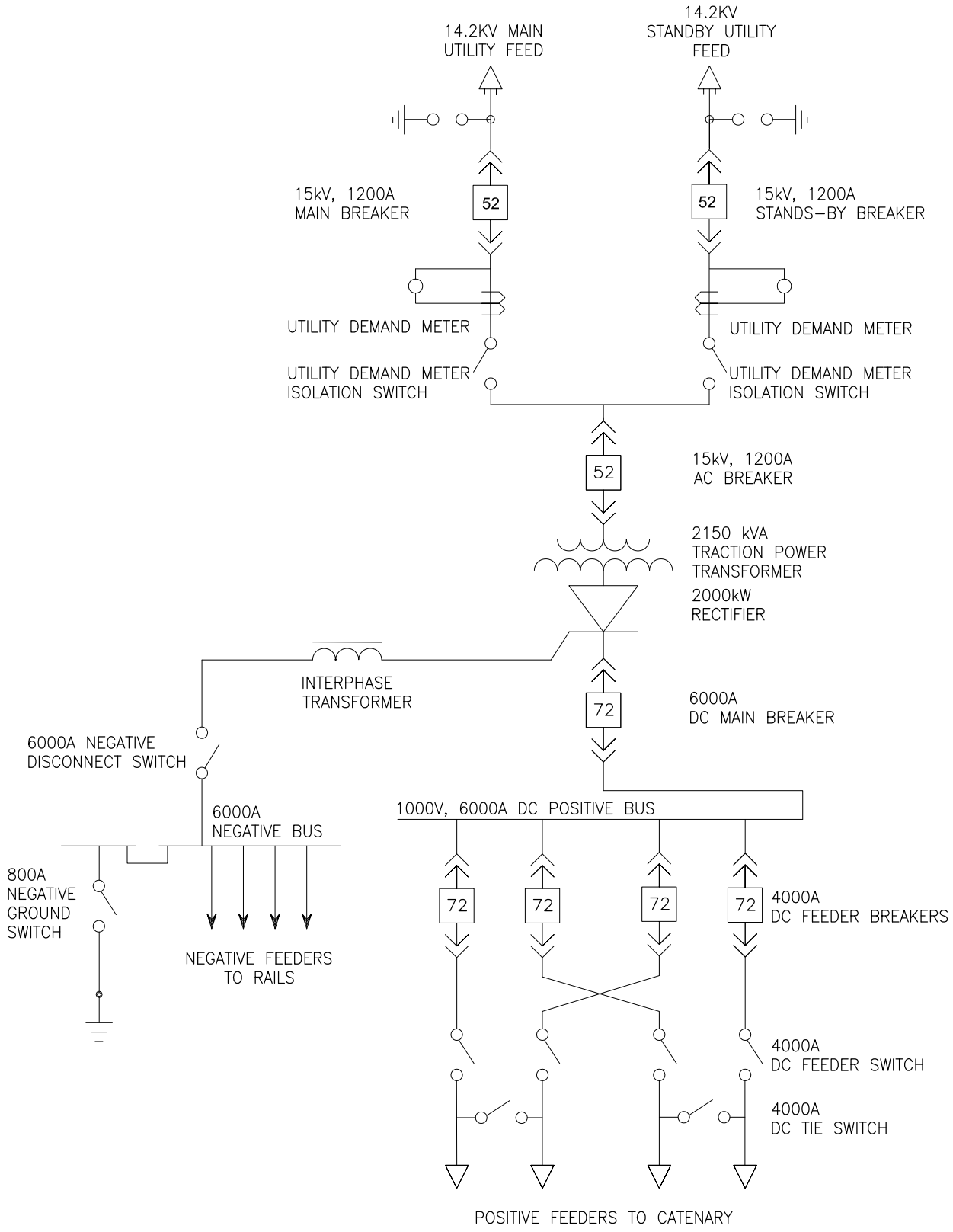

		FIGURE 6.2C TYPICAL POWER DISTRIBUTION SINGLE LINE DIAGRAM NLRT EXTENSION	CHAPTER 6 TRACTION POWER
26-JAN-17	DETAILS		
Date	Revision		

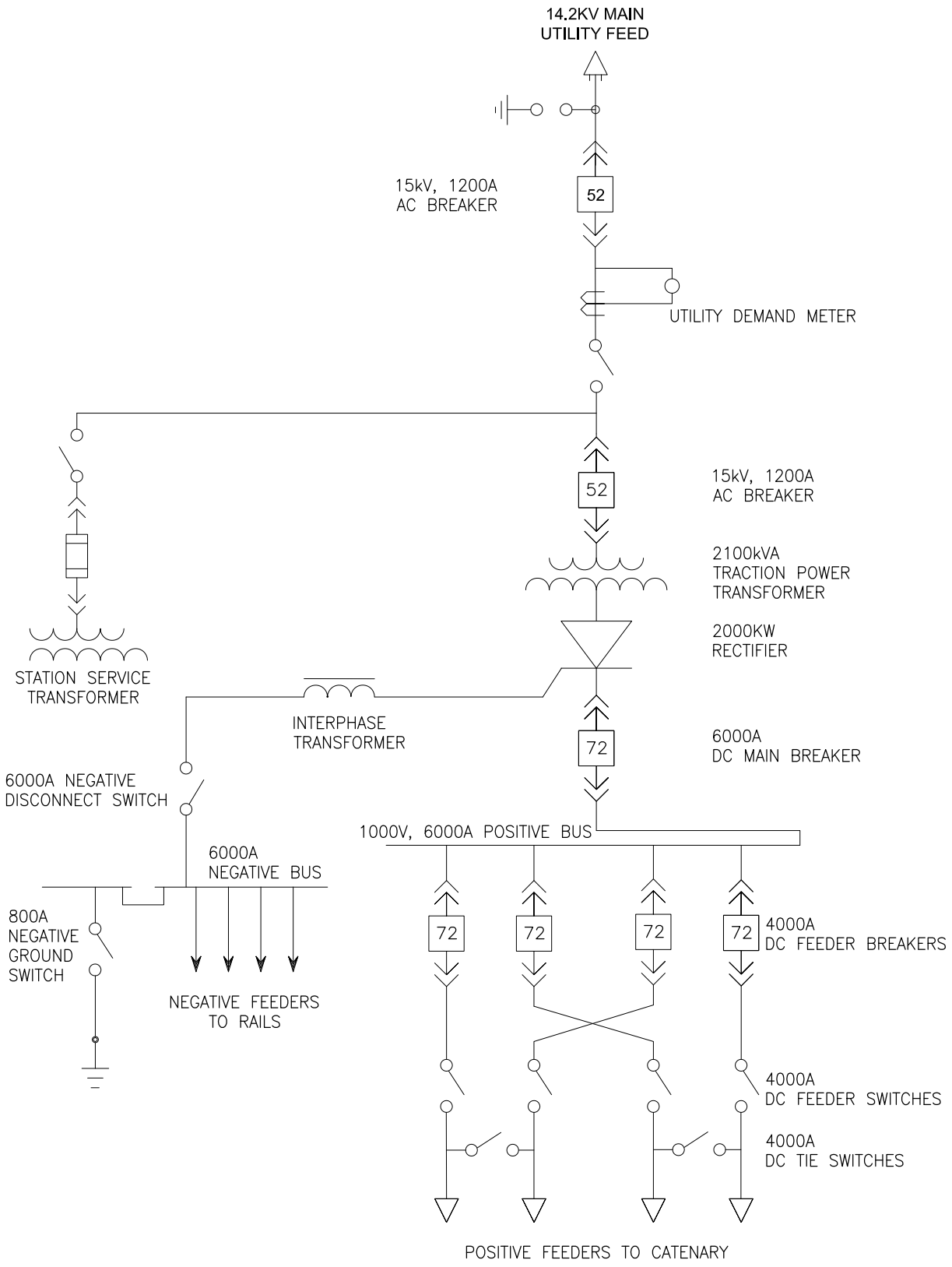

		FIGURE 6.2D	CHAPTER 6
		PORTABLE SUBSTATION SINGLE LINE DIAGRAM NLRT EXTENSION	TRACTION POWER
26-JAN-17	DETAILS		
Date	Revision		

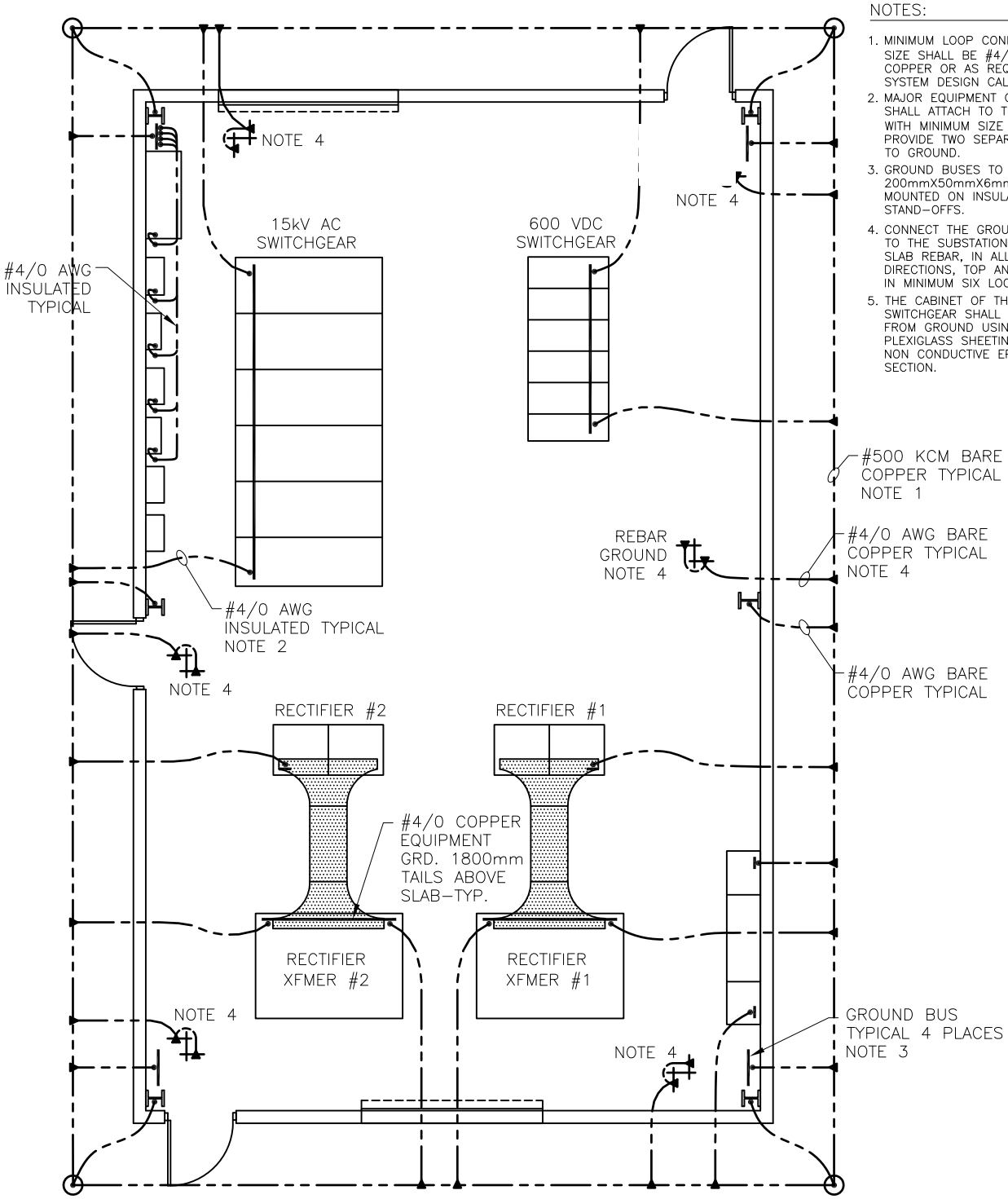

NOTES:

1. MINIMUM LOOP CONDUCTOR SIZE SHALL BE #4/0 , BARE COPPER OR AS REQUIRED BY SYSTEM DESIGN CALCULATIONS
2. MAJOR EQUIPMENT COMPONENTS SHALL ATTACH TO THE LOOP WITH MINIMUM SIZE #4/0 AWG. PROVIDE TWO SEPARATE PATHS TO GROUND.
3. GROUND BUSES TO BE 200mmX50mmX6mm COPPER MOUNTED ON INSULATED STAND–OFFS.
4. CONNECT THE GROUND LOOP TO THE SUBSTATION. FLOOR SLAB REBAR, IN ALL DIRECTIONS, TOP AND BOTTOM IN MINIMUM SIX LOCATIONS.
5. THE CABINET OF THE 600 VDC SWITCHGEAR SHALL BE ISOLATED FROM GROUND USING PLEXIGLASS SHEETING OR A NON CONDUCTIVE EPOXY FLOOR SECTION.

• APPLICABLE FOR TPSS'S CONSTRUCTED BETWEEN UNIVERSITY AND CLAREVIEW LRT STATIONS.

		FIGURE 6.3A	CHAPTER 6
			TRACTION POWER
		TYPICAL TPSS GROUNDING LAYOUT	
Date	Revision		

NOTES:

1. MINIMUM LOOP CONDUCTOR SIZE SHALL BE 500 kCMIL STRANDED BARE COPPER OR AS REQUIRED BY SYSTEM DESIGN CALCULATIONS

2 MAJOR EQUIPMENT COMPONENTS SHALL ATTACH TO THE LOOP WITH MINIMUM SIZE # 4/0 AWG. PROVIDE TWO SEPARATE PATHS TO GROUND.

3. GROUND BUSES TO BE 200mmX50mmX6mm COPPER MOUNTED ON INSULATED STAND–OFFS RATED FOR 1000 VDC.

4. CONNECT THE GROUND LOOP TO THE SUBSTATION. FLOOR SLAB REBAR, IN ALL DIRECTIONS, TOP AND BOTTOM IN A MINIMUM OF SIX LOCATIONS.

5. THE CABINET OF THE 600 VDC SWITCHGEAR SHALL BE ISOLATED FROM GROUND USING PLEXIGLASS SHEETING OR A NON CONDUCTIVE EPOXY FLOOR SECTION.

6. DETAILED REQUIREMENTS FOR GROUNDING AND BONDING ARE OUTLINED SECTION 8.0 OF THE SS ELECTRICAL EQUIPMENT MANUAL.

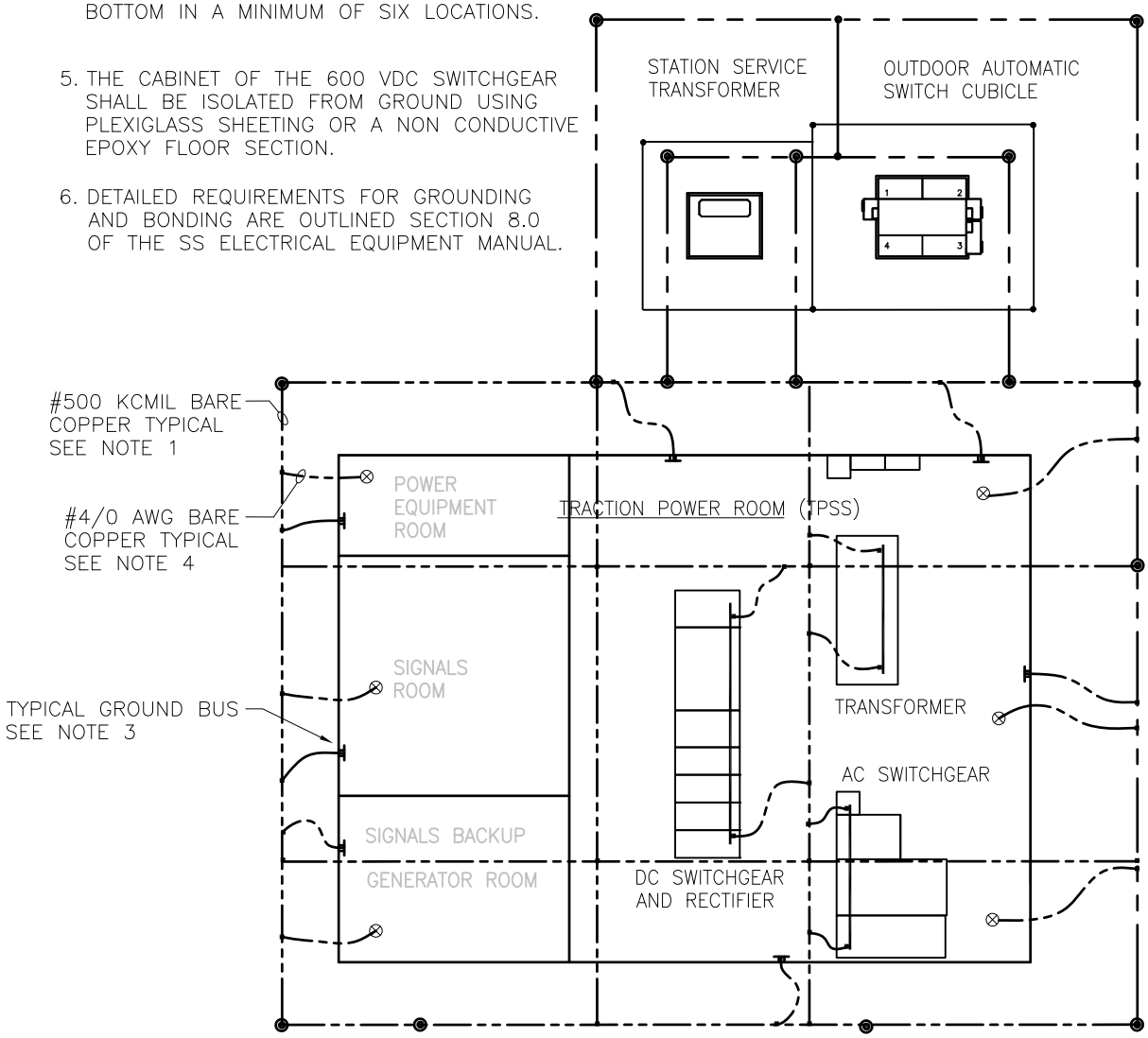

		FIGURE 6.3B TYPICAL TPSS GROUNDING LAYOUT SLRT EXTENSION	CHAPTER 6 TRACTION POWER
26–JAN–17	LABEL		
Date	Revision		

NOTES:

1. MINIMUM LOOP CONDUCTOR SIZE SHALL BE 500 kCMIL STRANDED BARE COPPER OR AS REQUIRED BY SYSTEM DESIGN CALCULATIONS

2 MAJOR EQUIPMENT COMPONENTS SHALL ATTACH TO THE LOOP WITH MINIMUM SIZE # 4/0 AWG. PROVIDE TWO SEPARATE PATHS TO GROUND.

3. GROUND BUSES TO BE 200mmX50mmX6mm COPPER MOUNTED ON INSULATED STAND-OFFS RATED FOR 1000 VDC.

4. CONNECT THE GROUND LOOP TO THE SUBSTATION. FLOOR SLAB REBAR, IN ALL DIRECTIONS, TOP AND BOTTOM IN A MINIMUM OF SIX LOCATIONS.

5. THE CABINET OF THE 1000 VDC SWITCHGEAR SHALL BE ISOLATED FROM GROUND USING SHEETING OR A NON CONDUCTIVE EPOXY FLOOR SECTION.

6. DETAILED REQUIREMENTS FOR GROUNDING AND BONDING ARE OUTLINED SECTION 8.0 OF THE SS ELECTRICAL EQUIPMENT MANUAL.

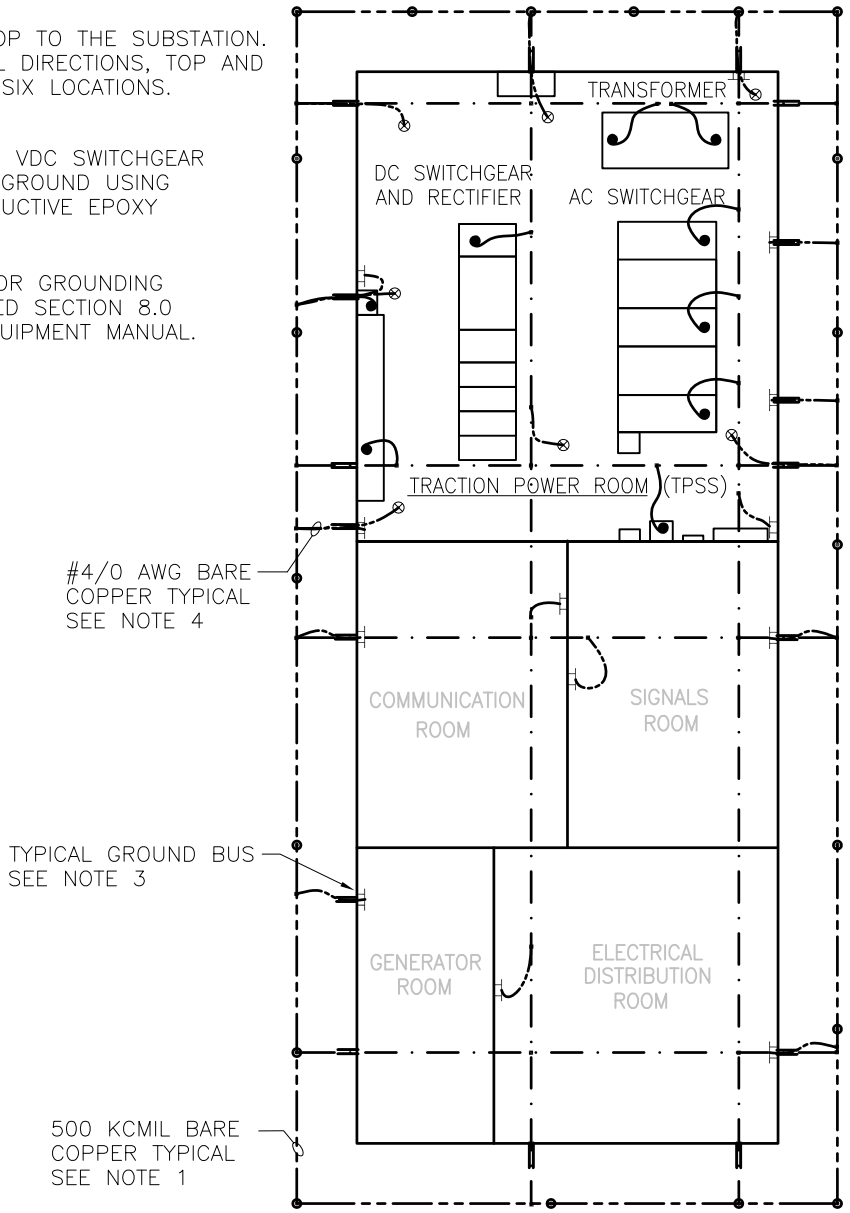

		FIGURE 6.3C TYPICAL TPSS GROUNDING LAYOUT NLRT EXTENSION	CHAPTER 6 TRACTION POWER
26-JAN-17	NOTES, LABELS		
Date	Revision		

NOTES:

1. MINIMUM LOOP CONDUCTOR SIZE SHALL BE 500 kCMIL STRANDED BARE COPPER OR AS REQUIRED BY SYSTEM DESIGN CALCULATIONS

2 MAJOR EQUIPMENT COMPONENTS SHALL ATTACH TO THE LOOP WITH MINIMUM SIZE # 4/0 AWG. PROVIDE TWO SEPARATE PATHS TO GROUND.

3. GROUND BUSES TO BE 200mmX50mmX6mm COPPER MOUNTED ON INSULATED STAND-OFFS RATED FOR 1000 VDC.

4. CONNECT THE GROUND LOOP TO THE SUBSTATION. FLOOR SLAB REBAR, IN ALL DIRECTIONS, TOP AND BOTTOM IN A MINIMUM OF SIX LOCATIONS.

5. THE CABINET OF THE 1000 VDC SWITCHGEAR SHALL BE ISOLATED FROM GROUND USING SHEETING OR A NON CONDUCTIVE EPOXY FLOOR SECTION.

6. DETAILED REQUIREMENTS FOR GROUNDING AND BONDING ARE OUTLINED SECTION 8.0 OF THE SS ELECTRICAL EQUIPMENT MANUAL.

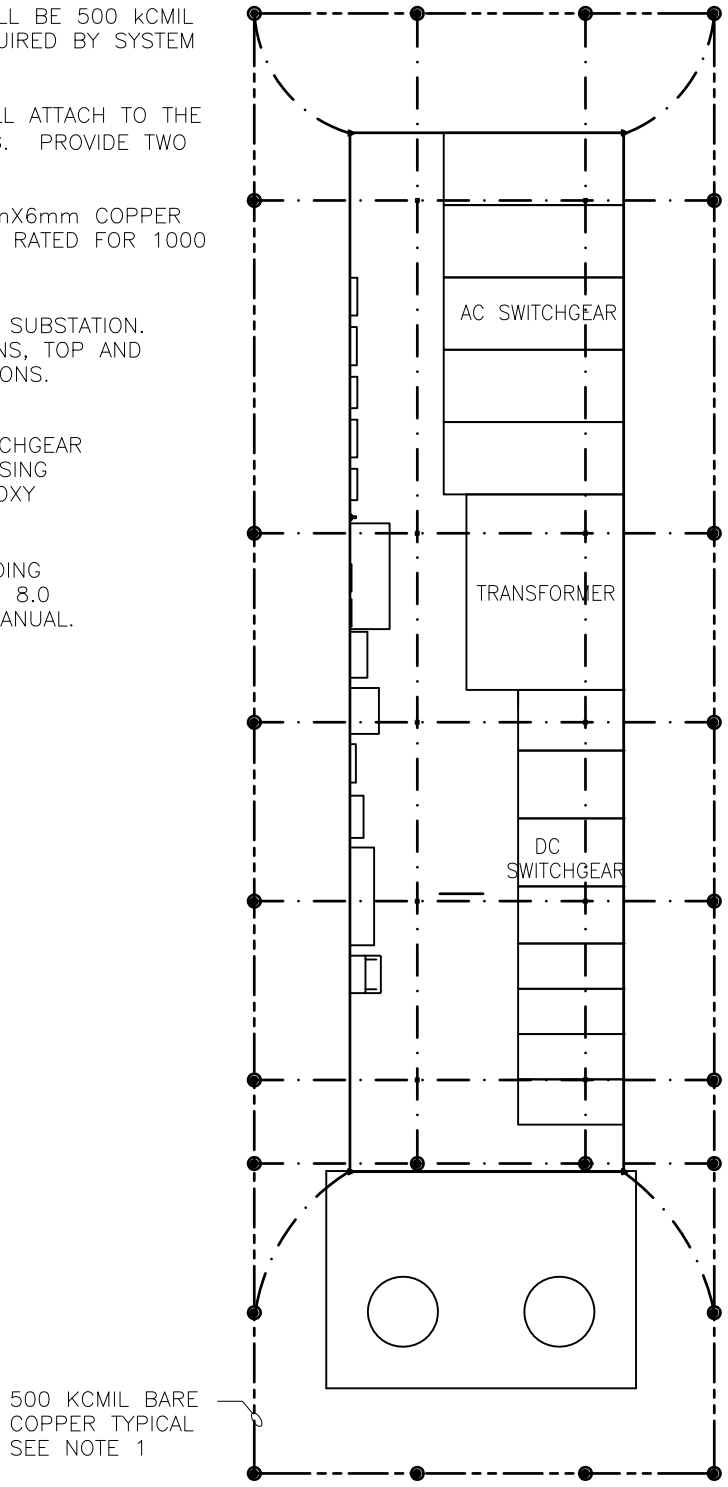

		FIGURE 6.3D NAIT TPSS GROUNDING LAYOUT NLRT EXTENSION	CHAPTER 6 TRACTION POWER
26-JAN-17	NOTE, LABEL		
Date	Revision		

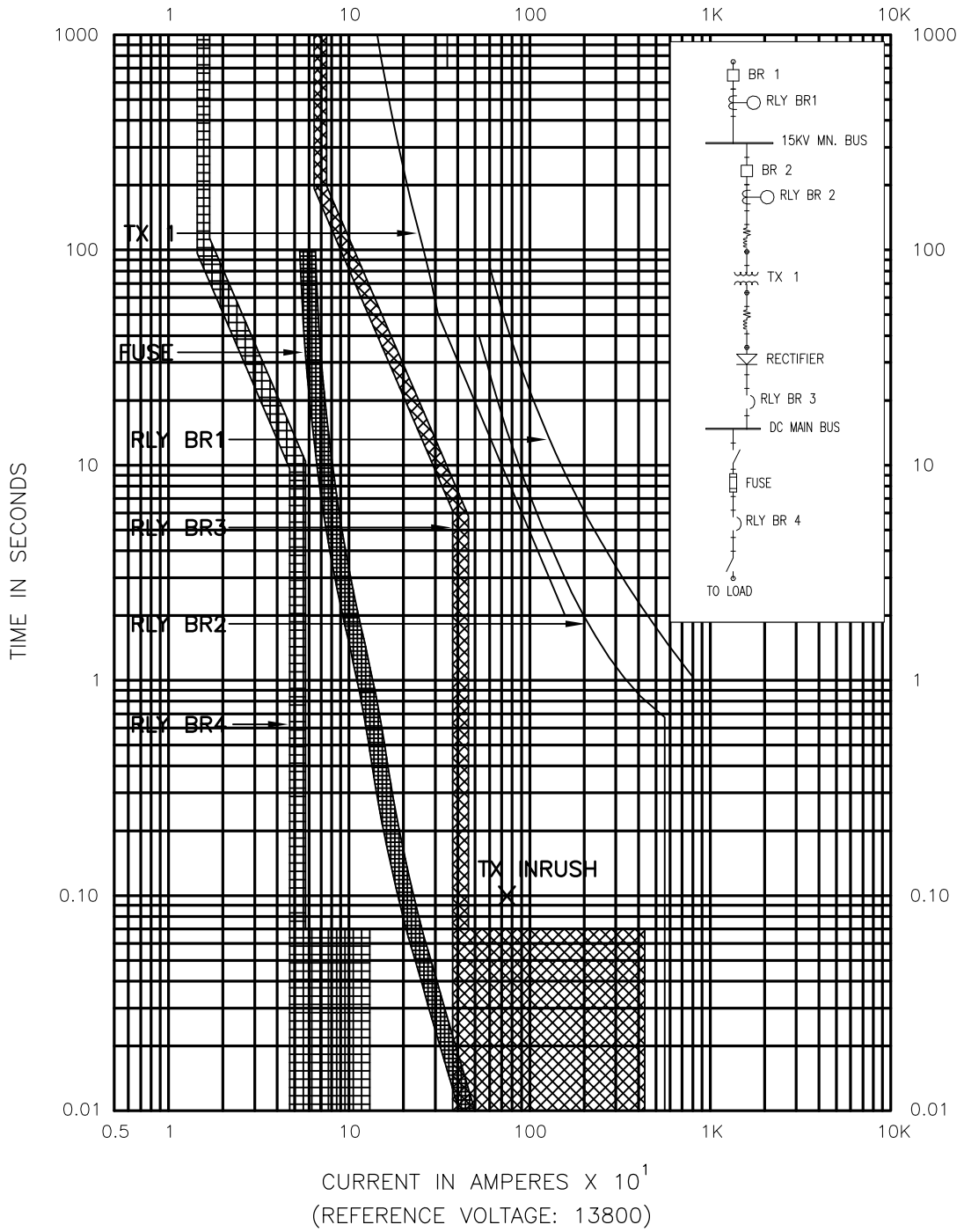

		FIGURE 6.4 TYPICAL TIME CURRENT CURVE	CHAPTER 6 TRACTION POWER
Date	Revision		

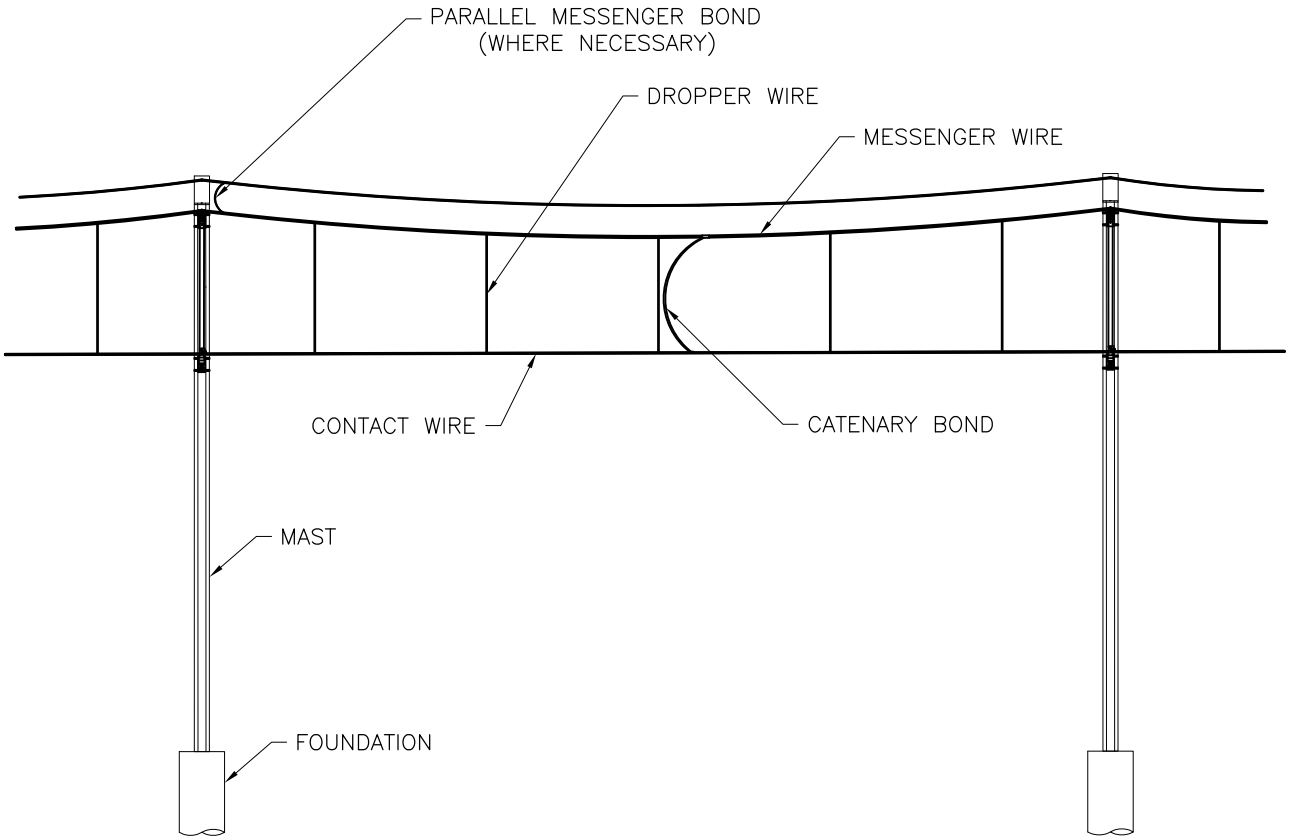

SIMPLE CATENARY SPAN

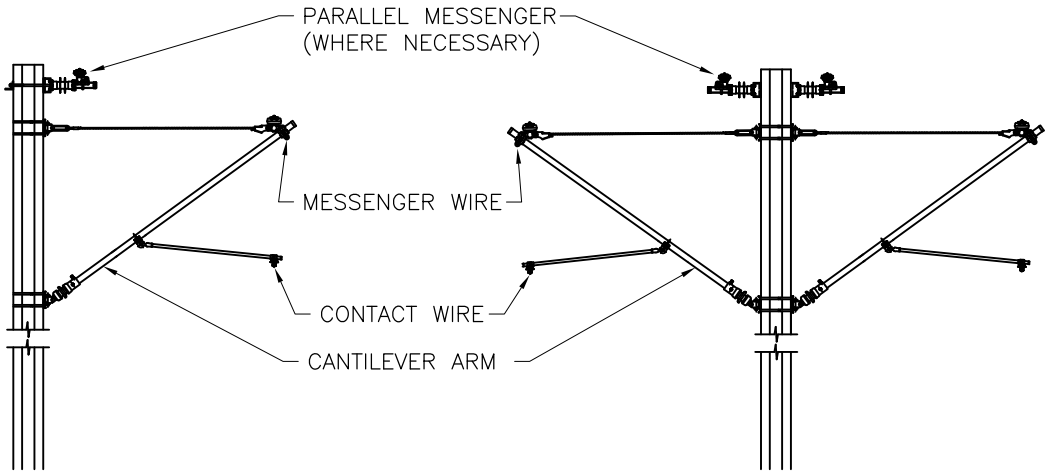

CATENARY ON ONE SIDE OF MAST

CATENARY ON BOTH SIDES OF MAST

		FIGURE 6.5	CHAPTER 6
		TYPICAL OCS	TRACTION POWER
		SIMPLE CATENARY LAYOUT	
26-JAN-17	LABEL		
Date	Revision		

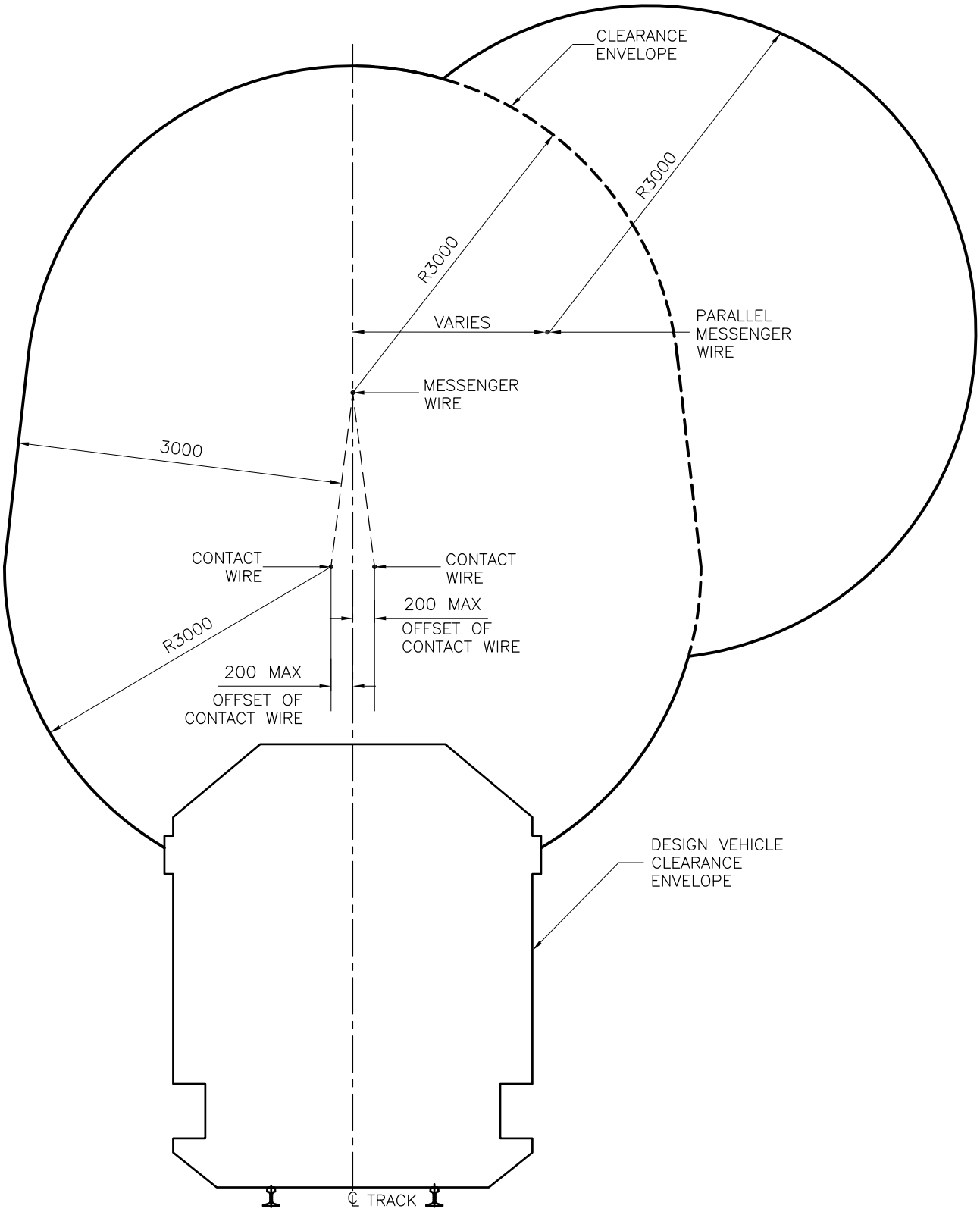

		FIGURE 6.6 TRACTION POWER EQUIPMENT CLEARANCE REQUIREMENTS	CHAPTER 6 TRACTION POWER
Date	Revision		

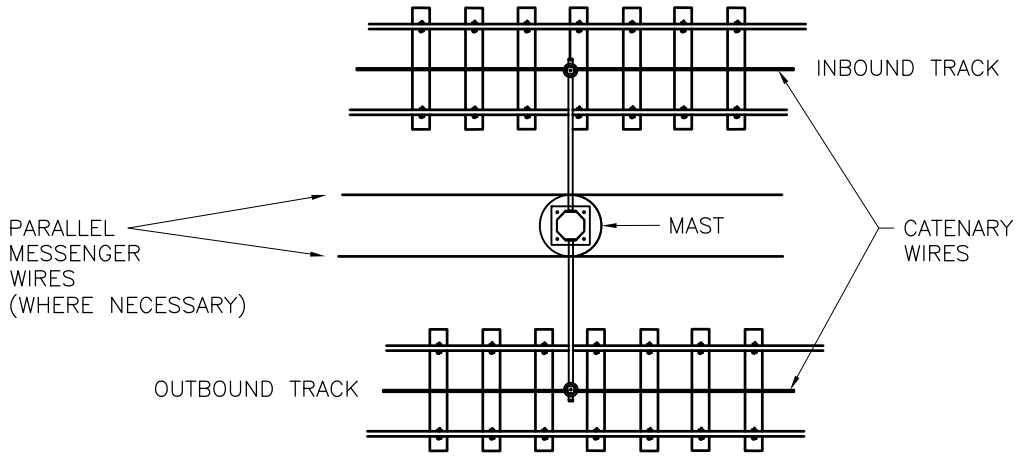

CATENARY MAST IN CENTER OF TRACK

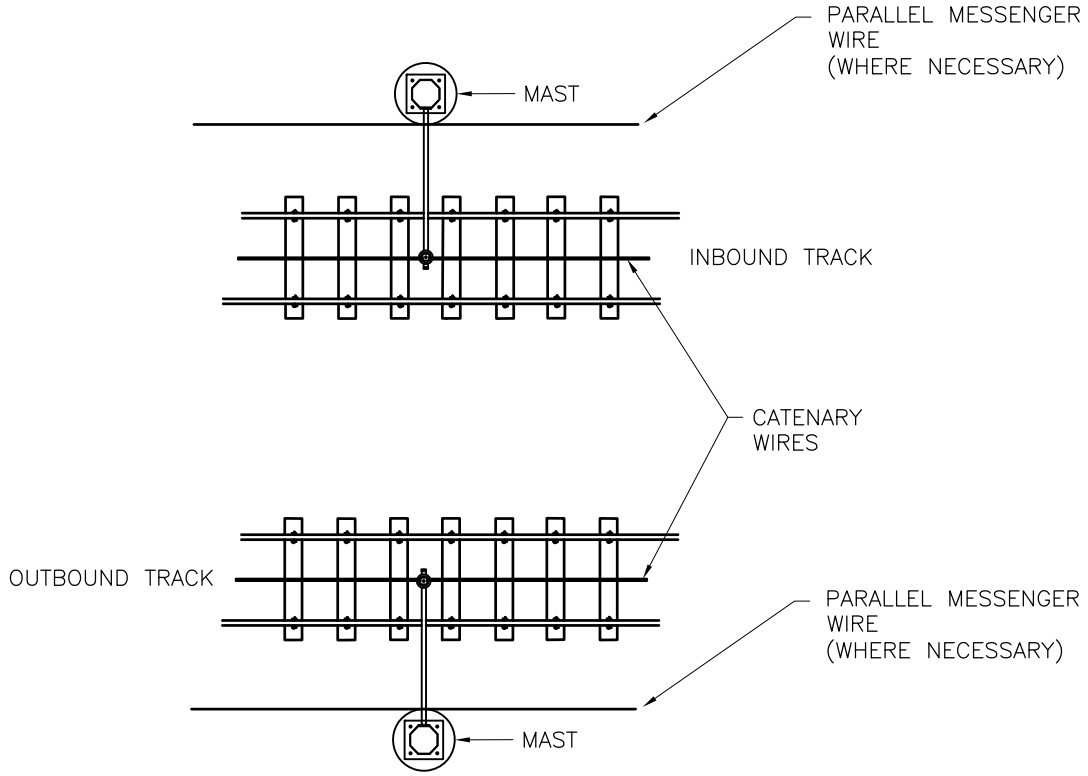

CATENARY MAST ON OUTSIDE OF TRACK

		FIGURE 6.7	CHAPTER 6
			TRACTION POWER
		OCS TYPICAL MAST PLACEMENT	
Date	Revision		

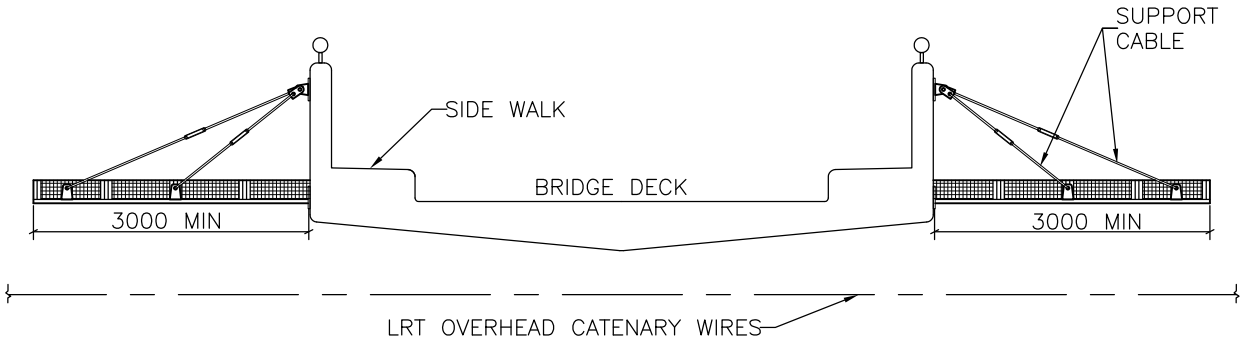

SECTION

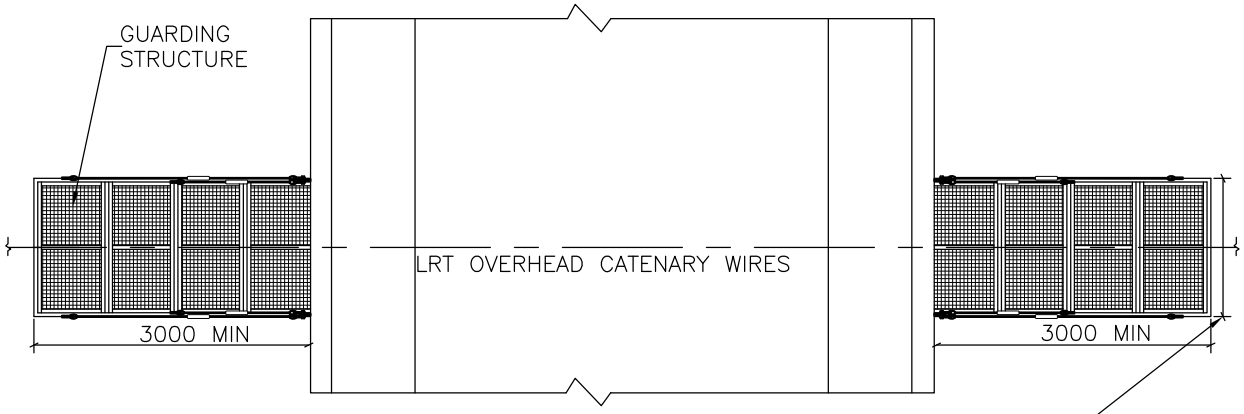

PLAN

REFER TO TABLE 8.1 FROM THE ALBERTA ELECTRICAL COMMUNICATION UTILITY CODE (AECUC) FOR DETAILS.

PROFILE

NOTE: SHROUD TO PROVIDE PROTECTION FOR ALL CATENARY WIRES. CONFIGURATION MAY VARY.

		FIGURE 6.8 TYPICAL CATENARY WIRE PROTECTION BRIDGE / PORTAL STRUCTURES	CHAPTER 6 TRACTION POWER
Date	Revision		

LRT DESIGN GUIDELINES

Chapter 7

2017 EDITION – Revisions Tracking Form

Section	Reference	Revision General Description	Issue Date
All	Entire Text	Chapter 7 – Signals has undergone significant revision from the 2011 version.	July 2017

7.0 SIGNALS

		Page
7.0	**SIGNALS**	**1**
7.1	GENERAL	1
7.1.1	Introduction	1
7.1.2	Abbreviations, Definitions, Nomenclatures	1
7.1.3	System Description	2
7.1.4	Applicable Codes, Standards, Regulations and Guidelines	3
7.2	PHILOSOPHY	4
7.2.1	Goals and Objectives	4
7.2.2	Operating Assumptions and Principles	5
7.2.3	Checked-Redundancy Principle	5
7.3	LRT SIGNAL SYSTEM OPERATION	6
7.3.1	Headway and Train Size	6
7.3.2	Direction of Running	6
7.3.3	Vehicles	6
7.4	LRT SYSTEM REQUIREMENTS	7
7.4.1	System Design	7
7.4.2	System Safety Principles	8
7.4.3	Speed Restrictions	8
7.4.4	Automatic Fixed Block Signalling	9
7.4.5	Determination of Block Location	11
7.4.6	CBTC System	11
7.4.7	Prevention of Side Collisions and Derailments	11
7.4.8	Grade Crossings	11
7.4.9	LRT Operation Functional Requirements	13
7.4.10	Wayside LRT Signal Equipment	13
7.4.11	Communication Requirements for LRT Control	13
7.4.12	Signal Aspects	13
7.4.13	ATS Interface	13
7.5	EQUIPMENT REQUIREMENTS	14
7.5.1	General	14
7.5.2	Numbering Schemes	14
7.5.3	Wayside Signals	15
7.5.4	Track Circuits	16
7.5.5	Powered Track Switches	17
7.5.6	Manual Track Switches with Switch Point Indication Interlocks	17
7.5.7	Route Key Switch	18
7.5.8	Interlocking	18
7.5.9	Central Traffic Control System	18
7.5.10	Grade Crossing Equipment	19
7.5.11	Bungalows, and Junction Boxes	20
7.5.12	Signal Room	20
7.5.13	Signal Room Power Supply	21
7.5.14	Wire and Cable	22
7.5.15	Spare Parts	23
7.5.16	Duct Banks	23
7.5.17	Knife Switches	23

7.6 INTERFACE REQUIREMENTS 24

7.7 RESPONSIBILITIES 25

7.7.1 Signal System Contractor 25
7.7.2 Deliverables 26

7.8 TESTING AND COMMISSIONING 26

7.9 TRAINING REQUIREMENTS 27

7.10 RECORD DOCUMENTS 28

7.0 SIGNALS

7.1 GENERAL

7.1.1 Introduction

This chapter provides the guidelines and general requirements that are needed by the signals consultant, ETS and contractors for the design of the extensions to Edmonton's LRT signal system and its related components. These guidelines are supplemented by the engineering standards contained in the Engineering Standards Manual LRT Signals. Throughout this chapter it will be referred to as the "Signals Engineering Standards Manual".

7.1.2 Abbreviations, Definitions, Nomenclatures

7.1.2.1 Abbreviations

AFBS	Automatic Fixed Block System
ATO	Automatic Train Operation
ATP	Automatic Train Protection
ATS	Automatic Train Supervision
CBTC	Communication Based Train Control
CWI	Crossing Warning Indicator
EMC	Electromagnetic Compatibility
FCU	Field Control Unit
FIFO	First in First out
HSS	Health Sciences Station
LRT	Light Rail Transit
LRV	Light Rail Vehicle
MRC	Manual Route Clearance
NB	Northbound
OCC	Operations Control Centre
SCSISB	Small Computer System Interface Southbound
SERSCSI	Signal Equipment Room Small Computer System Interface
SOPSER	Standard Operation Procedure Signal Equipment Room
SPISOP	Switch Point Indicator Standard Operation Procedure
TCSPI	Track Circuit Switch Point Indicator
TPSSTC	Traction Power Signal Station Track Circuit
TSRTPSS	Temporary Speed Restriction Traction Power Signal Station
TWCTSR	Train to Wayside Carrier Temporary Speed Restriction
VCSTWC	Vital Computer System Train to Wayside Carrier
VMICSVCS	Vital Microprocessor Interlocking Control System Vital Computer System
WSCVMICS	Wayside Signal Case Vital Microprocessor Interlocking Control System
ZCWSC	Zone Controller Wayside Signal Case
ZC	Zone Controller

7.1.2.2 Definitions

Convergence area Is the area where the Capital line trains and the Metro line trains run on the Capital line track, physically Churchill Junction to the Health Sciences Tail track.

Failsafe is defined as a system whereby no single point of failure can result in an unsafe condition. No latent failures, which when combined with any subsequent failure will result in an unsafe condition, can be permitted.

Flank protection is defined protection provided to a train from any conflicting movement that would allow another train or other equipment to foul the track the protected train is on.

Non-vital describes or refers to an electrical circuit or a piece of equipment whose function does not affect the safety of the train operation. Non-vital is not safety critical (refer to Section 7.2.1.1).

Office Centralized Non-Vital systems for managing day to day LRT operations and maintenance activities.

Vital describes or refers to an electrical circuit or a piece of equipment whose function affects safety.

Wayside – Refer to Chapter 3 Clearances and Right-of-way, Section 3.2.3.

Other definitions may be provided within this chapter.

7.1.2.3 Nomenclature

The Engineering Standards Manual LRT Signals, must be utilized to keep all new LRT additions, where possible, consistent with the standard already in use on Edmonton LRT system.

7.1.3 System Description

7.1.3.1 Existing

Edmonton's LRT System currently consists of two double tracked lines; the Capital Line and the Metro Line. The Capital Line is approximately 21 km in length and runs from Clareview Station in the Northeast to Century Park Station in the South. Approximately 5.4 km is in twin or common tunnel. The remaining portion is on surface or open line with the LRT under passing CN Rail in northeast Edmonton. The surface line has a number of roadway crossings controlled by crossing gates. Located along the line are fifteen (15) stations, six (6) of which are underground. The Capital Line operates on a 4 car consists during peak periods, it can also operate 5-car consists.

The Metro Line is a 3.3 km extension off the Capital Line and runs from Churchill Station in downtown Edmonton to NAIT LRT Station in the Northwest. The Health Sciences Tail Track on the Capital line is used for revenue turnback for the Metro line. The tracks are underground in twin tunnels from Churchill Station to just before Grant MacEwan Station. There are three (3) stations along the line all at surface level. The roadway crossings are controlled by crossing gates. The length of the NAIT LRT Station restricts the Metro Line to operate with 3-car consists.

The train control signal system is located in nine (9) signal equipment rooms (SER) strategically located along the track right-of-way. Each signal room houses vital and non-vital control systems that cover a portion of the territory along the main line. Each signal room is capable of operating train movements within its territory automatically and independent of the other SERs. The SERs locations and the territory are shown in the following table:

SER	Territory	Line	Block type
*Belvedere	Clareview to 66 Street	Capital	Fixed
*Coliseum	66 Street to Stadium Station	Capital	Fixed
Churchill	Stadium Station to Central and North from Churchill to MacEwan	Both	Fixed (fallback) & CBTC
Corona	Central to North Portal	Both	Fixed (fallback) & CBTC
University	North Portal to McKernan/Belgravia	Both	Fixed (fallback) & CBTC
*South Campus	South of 60 Ave BS734 to McKernan/Belgravia	Capital	Fixed
*Southgate	North of 34Ave BS1078 to South of 60Ave BS736	Capital	Fixed
*Century Park	Century Park to 34 Ave	Capital	Fixed
*Kingsway	North of MacEwan Station to NAIT	Metro	CBTC
*Grant MacEwan		Power for CBTC Radio only	

*__Note__: SER located at TPSS near the LRT station

Each SER interfaces with each other and operate under a safety critical Automatic Fixed Block System (AFBS) for Capital Line and Moving Block System for Metro Line and the CBTC portions of the Capital line. These systems are operated from a centralized Operations Control Center (OCC) and is called the Automatic Train Supervisory (ATS) system comprising of four LRT Controller consoles at the ETS Control Centre at Churchill Station.

7.1.4 Applicable Codes, Standards, Regulations and Guidelines

All new designs, components and installation procedures must follow the applicable standards and provisions contained in the following documents:

- Alberta Electrical and Communication Utility Code (AECUC)
- American Railway Engineering and Maintenance of Way Association (AREMA)
- European Committee for Electrotechnical Standardization (CENELEC) Standards EN50126, EN50128 and EN50129
- Communications and Signal Specifications (or approved alternate standards, as approved by the City of Edmonton)
- Canadian Standards Association (CSA)
- Canadian Electrical Code (and related applicable standards for Materials)
- National Transportation Agency, Railway Transport Committee.
- Engineering Standards Manual for LRT Signals – (referred to as the Signals Engineering Standards Manual)
- Canadian Grade Crossing Standard.
- IEEE 1474 Standards for Communication Based Train Control

Control equipment proposed for use must have a proven performance record with major North American and/or European public transportation agencies that operate heavy rail or LRT

systems. This equipment must also be rated for use in harsh winter climatic conditions similar to Edmonton.

7.1.4.1 Maintaining Current Codes, Standards, Regulations and Guidelines

At the time of design, codes, standards, regulations and guidelines referenced within these Design Guidelines must be reviewed to ensure compliance with current codes, standards, regulations, and guidelines. Where there is conflict, the designer is to seek clarification from the City.

New and updated equipment or software along with related standards, codes, regulations and guidelines can be adopted, as long as these are compatible.

Note: There may be a need to Grandfather standards applicable at the time the LRT system was designed and constructed.

7.2 PHILOSOPHY

Safety is of primary importance in the operation of Edmonton's LRT system. The design of the high floor vehicle signal system, if not based around CBTC, must be based on the failsafe Automatic Fixed Block System (AFBS) engineering design principles outlined in these Guidelines.

7.2.1 Goals and Objectives

The signal system must be designed on the basis that a single failure by either a system or by human error does not result in an unsafe condition. The design objective is to provide safeguards in the signal system to prevent such a possibility, while still facilitating an efficient LRT operating system.

7.2.1.1 Safety Critical

A fully automatic safety critical and failsafe system must be employed to prevent hazardous conditions from occurring during normal system operations. Safety Critical systems must be designed to activate in the event of system or human error and the system must not hamper the normal safe conditions in train traffic operation. All systems (safety critical or not) must be designed fail safe to prevent an unsafe condition from occurring. No latent failure may result in an unsafe condition when combined with any other failure. The system must ensure that safe operating procedures and methods are maintained.

Refer to Signals Engineering Standards Manual Section 3.1.3 for examples of safety critical failsafe elements.

7.2.1.2 Automatic Systems and Protection

Installation of automatic systems is needed to:

- Provide the level of safety required to prevent train on train and other types of collision with fixed objects and conflicting vehicular or pedestrian traffic.
- Provide service efficiency through automation in performing routine and repetitive tasks and functions.
- Enforce operating safety rules and equipment restrictions.
- Provide warning to the public at points of public interface with the rail system

7.2.1.3 Automatic Train Protection

Automatic Train Protection is independent of the motorman. It must be incorporated on the wayside and LRV to maintain and enforce a high level of safety.

7.2.1.4 Level of Safety

For a safety critical design the required level of safety must prevent the following incidents from happening:

- Head to tail collisions between trailing and leading trains.
- Head to head collisions with opposing trains.
- Head to side collisions with other trains.
- Collisions with vehicular and pedestrian traffic.

7.2.1.5 Collision Protection

All conceivable modes must be employed to protect against possible conflict and collision between trains, fixed objects and other traffic under normal operations. To meet this goal, automatic systems must be installed on the wayside and on the train that will prevent the selection of conflicting routings, maintain adequate train separation and will bring about the enforced and non-recoverable stopping of an encroaching train.

In an AFBS, the system is divided into blocks and permission to enter the block will not be given unless free and unrestricted travel, free of conflicts, can be made to the end of the block.

7.2.1.6 Wayside Equipment

The signal wayside system must be designed to minimize the number of wayside boxes distributed across the system. This is done to allow ease of maintenance and troubleshooting given the harsh winter conditions in Edmonton.

7.2.2 Operating Assumptions and Principles

An important principle of providing a safe LRT system is the use of a System Safety Program. It requires a formalized process for initiating and implementing system changes that enhances the safe transportation of passengers. The System Safety Program is comprised of the publication, review and updating of the following:

- The LRT Operating Rules
- LRT SOP
- Safety Management Audit Program

It is the responsibility of all LRT personnel to follow all rules and procedures outlined in the above documents.

The Motormen is recognized as the operator of the LRT train and is fully responsible for the safe operation of the LRT train.

LRT Controllers located at the ETS Control Centre are trained to direct train traffic in the safest manner. It is their responsibility to be aware of all the inherent dangers of executing any train traffic control functions.

7.2.3 Checked-Redundancy Principle

The checked-redundancy principle applies to safety-critical hardware and/or software configurations, and states that the probability of any failure or combinations of such failures that can result in a condition not known to be safe must be demonstrated to be less than 10^9 per train operating hour for train-borne equipment and less than 10^9 per system operating hour for other equipment. Therefore, each function of a component or subsystem which is designed in accordance with the checked-redundancy principle must provide a level of safety equivalent to that provided by the same function designed in accordance with the fail-safe principle.

The checked-redundant control configuration, whether it comprises hardware or software elements, must incorporate at least two parallel control units processing a common system characteristic and a means of comparing the output of the control units. If there is agreement from the comparison, then the system may be allowed to respond in accordance with the output of the control units. If there is disagreement, the system must immediately revert to a safe state.

The following characteristics, at a minimum, must be incorporated into the checked-redundancy design:

- The checking process is, in itself, fail-safe.
- The checking process is sufficiently frequent that similar or identical errors or failures in redundant units could not occur between checks.
- The checking process is sufficiently sensitive to detect significant errors in a single unit.
- Failure to check causes timely action to occur which maintains safety.
- Redundant units are sufficiently independent that hazards due to common errors cannot occur.
- The checking mechanism used to detect a failure and initiate a safe system reaction to the failure cannot be compromised by the failure.

7.3 LRT SIGNAL SYSTEM OPERATION

The existing LRT signal system provides all the necessary failsafe protection measures to ensure safe train operation as described in the following sections.

7.3.1 Headway and Train Size

Train size can be anywhere from a single car to a 5 car consist.

The operational headways for the Capital Line as well as Metro Line is 5 minutes and for the convergence area is 2.5 minutes.

The design headways for the Capital Line as well as Metro Line other than overlay area is 2.5 minutes and for the convergence area is 90 seconds.

The difference between the operational and design headways is to absorb the natural accordion effect of the system as well as system delay recovery. Operational modelling is essential for providing input into the signal design and operation plans.

7.3.2 Direction of Running

The system operates normally as right hand running, but shall be designed for full bi-directional movements to maintain service during incidents or maintenance work.

7.3.3 Vehicles

The LRVs in use on the Edmonton LRT system are described in Chapter 2, Vehicles. Additional detailed information is also provided in Section 3.6 of the *Signals Engineering Standards Manual*.

7.3.3.1 Operating Speed

The determination of the maximum operating speed is based on the following criteria:

- Track alignment.
- Civil works restrictions such as the track switch rating.
- Safety reasons where the consequences of exceeding the posted speed are severe.
- Passenger comfort.

Refer to Chapter 4 Track Alignment, Sections 4.1.3 to 4.1.5 and Chapter 6 Traction Power Section 6.5.3.2 for additional considerations.

7.3.3.2 Speed Control

Under normal conditions, it is the Motorman who controls the speed of the train and obeys all wayside train control signals and the instructions from the LRT Controller. However, at various points along the ROW, speed check devices have been installed to confirm adherence to the posted speed. These devices shall be installed before interlocking areas, stations or other locations where it is determined that enforced braking is required. The intention of the speed checks is to enforce a mandatory brake on the train, which according to the LRT Rule Book requires the Motorman to report to LRT Control. The speed checks do not vitally enforce a safe speed at the point of concern (e.g. at a turn-out). If a train exceeds the posted speed limit at one of these locations the wayside speed check magnet will activate the automatic magnet sensor on the train. This will automatically trigger the braking mechanism on the train, and brings the train to a stop. See Section 7.4.3 of this chapter for more information regard speed enforcement.

7.3.3.3 Propulsion System

For a description of the LRV propulsion system, refer to Chapter 2, and Section 3.6 of the *Signals Engineering Standards Manual.*

7.3.3.4 Braking Characteristics

Existing LRVs are equipped with dynamic braking, track braking (magnetic), and disc brakes. In order to improve the adhesion conditions of the track, sand can be spread in front of the first axle of each powered truck (bogie) in the direction of travel. The sand control solenoids are operated automatically during a slip/slide condition monitored by the propulsion control system.

Additional braking and stopping information is available in Chapter 2 Vehicles, and the *Signals Engineering Standards Manual* Sections 3.6.3 and 3.6.4.

7.3.3.5 Track Alignment Constraints

Gradient, horizontal and vertical curvature restrictions are presented in Chapter 4, Track Alignment. Clearance requirements and restrictions are presented in Chapter 3 Clearances and Right-of-Way.

7.4 LRT SYSTEM REQUIREMENTS

7.4.1 System Design

7.4.1.1 General

The design and operation of the LRT signal system must allow for a worst case hazardous situation. The system operation must be designed to achieve the safest operation possible consistent with the required operational efficiency. Fully automatic safety critical failsafe systems must be employed to prevent the occurrence of a hazardous condition during normal system operations.

For any future LRT extensions, the new LRT vital logic control system must allow train movements in both directions on one track, i.e. each track is fully bi-directional. It must also allow trains to automatically turn back at all stations and at pocket tracks, should either location be chosen to behave as the end-of-line station due to special circumstances.

7.4.2 System Safety Principles

7.4.2.1 Design

As safety is of primary importance, the signal design must be based on safety critical engineering design principles rated as SIL4 or equivalent.

Automatic systems must be installed both on the wayside and the LRT train that will prevent the selection of conflicting routings, maintain safe train separation and will bring about the enforced and non-recoverable stopping of an encroaching train.

The signal system for each LRT line is to be divided into fixed blocks or moving blocks. Permission for a train entering a block must not be given unless free and unrestricted travel, free of conflicts can be made to the end of the block and through the overlap area. A red block signal will not turn green unless all the following conditions have been satisfied:

- Tracks within the block and overlap block are not occupied,
- The train is traveling in the correct direction,
- The next block signal is operating properly, which means no signal lamp element is burnt out,
- No conflicting route into the block territory (including the overlap block),
- Track switches are properly lined and locked for the route to be used both electrically and mechanically.

7.4.2.2 Clearances

The design and layout of the signal system must consider:

- Static and dynamic clearance envelopes,
- Safe braking standards for LRVs,
- Worst case stopping distance,
- Approach to signal blocks or grade crossings.

For more detailed information refer to Chapter 3 Clearances and Right-Of-Way, Section 3.3 and the *Signals Engineering Standards Manual*, Section 3.5.

7.4.2.3 Safe Braking Calculations

For the calculation of worst case stopping distances of the Edmonton LRV on level track and on downgrade refer to the *Signals Engineering Standards Manual*, Section 3.6.

For the definition of Approach Track (call-on) Circuit and the calculation of the approach circuit distance refer to the *Signals Engineering Standards Manual*, Section 3.11.

7.4.3 Speed Restrictions

As indicated in Section 7.3.3.1, the maximum allowable operating speed of the LRV on main line is based on a variety of factors. It is therefore a requirement to have speed enforcement devices, such as speed checks, installed to enforce the reporting of errors or operating procedure violations.

7.4.3.1 Speed Enforcement for Divergent Moves

Within the Edmonton LRT, the speed restrictions are a requirement for divergent moves on fixed block systems and shall be based on the LRT Guideline of 40 metres from the switch points.

7.4.3.2 Speed Enforcement for Operating Line Speed

The speed restriction shall be enforced at grade crossings and critical curves. The monitoring of these speeds will be achieved via speed checks or a speed supervision system. The speed restriction will be set at the maximum operating line speed of 70 km/hr or as determined through the requirements of the track design.

7.4.3.3 Speed Enforcement for Stations with Adjacent grade crossings

Speed checks shall be placed at both the entrance and the centre of all platforms with adjacent grade crossings so as to provide monitoring that the train is decelerating appropriately and in accordance with the proximity of the grade crossing. It shall also be used to promote a maximum speed entry into a station regardless of adjacent grade crossing.

7.4.4 Automatic Fixed Block Signalling

Each track, when not governed by CBTC or similar control, shall be divided into discrete sections called blocks. Each block is to be equipped with failsafe track circuit devices that sense and indicate the presence of a LRV within the block. A red and green block signal is to be placed at the entrance of each block.

With a two-aspect (red and green) block signal system, each block is to overlap the next signal block by the worst case stopping distance. This is referred to as signal block overlap. The block overlap is provided to prevent a collision with the train ahead in case the following train over-runs a block signal. The standard block overlap used on the Edmonton LRT System is 316 m based on level tangent track.

Refer to the *Signals Engineering Standards Manual*, Section 3.10 for more detailed information and the block overlap distance to be used on future LRT extensions.

7.4.4.1 Design Safety Requirements

The normal condition of the block signal is a RED (non-permissive) indication. The signal will not turn GREEN (permissive) unless it is safe to enter the block and the overlap is available. Any train that passes a red block signal will be stopped automatically by the train trip stop magnet associated with the block signal. Vital software must be designed using the check-redundancy principles as defined in Section 7.2.3. These systems must be proved to be independently safe from external influences such as, but not limited to EMI, interfaced systems or sub-systems, and human operation from either the local control panel or central train control.

7.4.4.2 Train Routing

A route is a combination of powered track switches, track, and field devices that allows a train to pass through a switching area according to the designated signal system design.

A route is established when the switches are lined and locked and all conflicting traffic is prevented from violating the “route”. Normally, a route path will start from the block entrance, through the next block signal into the overlap block. It will end at the end of the overlap block in the direction of current traffic.

Refer to the *Signals Engineering Standards Manual*, Section 3.12 for further detailed information and standards.

<u>Switch Position</u>

The actual switch position must be reported via vital circuits to the territory vital logic in order to determine whether the requested route is safely lined for the route to be used.

Power operated switches must not indicate position until mechanical locking is achieved. Once the track switches are lined and locked (mechanically and electrically) in the proper position for the route to be used then a route will be granted.

Interlocking

Conflicting routes must not be allowed into a particular section of track at any time. The block signal will display GREEN once a route is confirmed. However, before the GREEN indication can be displayed, the following conditions must be satisfied:

- Tracks within the block and overlap block are not occupied,
- The train is traveling in the correct direction,
- The next block signal is operating properly, which means no signal lamp element is burnt out,
- No conflicting route into the block territory (including the overlap block and flank protection),
- Track switches are properly lined and locked for the route to be used both electrically and mechanically.

Sectional Release on Interlocking

The release point of all switches in the interlocking must occur after a train vacates the last detector circuit (switch track circuit) in the route, unless this point is foul of conflicting movements. In the latter case, vacating the next track circuit (first track circuit after the switch) must be used as the release point.

Sequential Track Circuit Clearing

This is a feature that ensures the track circuit that is left unoccupied behind a proceeding train will not be cleared automatically unless the track circuit ahead is occupied.

This type of design is also sometimes referred to as a “tumble down track circuit clearing” system. When sequential track circuit clearing is used in the signal design circuitry, a false occupancy of a track circuit occurs when:

- A Train enters into a territory and then backs out the same way as it entered. This is because the last track circuit it occupied as it moved forward cannot be cleared because it travels out the same way as it entered.
- A NB train enters onto the SB track at Clareview Station. If this train continues to travel north onto the unmonitored track (“dark” track), the NB track circuit next to the Clareview platform (Track Circuit TC S13) will remain occupied until the next train goes south and occupies track TC S14 (track circuit ahead of TC S13) and un-occupies TC S13.

Other examples of dark track are located at MYN and E-Track.

In these situations, a “track circuit reset” command can be issued from the ETS Control Centre in an attempt to clear the false occupancy. While executing this command in a territory, all track circuits in that SER territory will drop momentarily. This would cause a GREEN block signal to drop to RED momentarily in front of an oncoming train; therefore when “sequential track circuit clearing” design, is utilized it is essential to provide delay circuitry on the GREEN block signals to prevent the GREEN signal from dropping to RED while executing the “track circuit reset” command.

For installations utilizing audio frequency (AF) track circuits (including B-Points) and axle counter blocks the concept of sequential track circuit clearing will continue to be utilized. It will continue to be possible for a false occupancy to occur so some form of track circuit reset must still be provided. This will not involve the momentary dropping of track circuits but rather a vital software function that is capable of detecting and removing a false occupancy.

Track Circuit Loss-Of-Shunt Timers

This feature ensures that momentary removal of shunt shall not allow a track circuit to be declared unoccupied. Any potential loss-of-shunting event is usually of brief duration, but may be adequate to allow the signal system to initiate un-safe events. This feature shall be used in conjunction with Sequential Track Circuit Clearing to enhance safety.

Self-Clearing

A train entering a route must clear sequentially all track circuits within the path of the route before another train can be routed through the same territory. Once a train accepts a route, the route must not be allowed to be cancelled by the LRT Controller.

7.4.5 Determination of Block Location

Blocks can be made as short as the safe stopping distance or as long as the station-to-station spacing. Refer to the *Signals Engineering Standards Manual*, Section 3.4.4 for the determination of block locations.

7.4.6 CBTC System

Note: These Design Guidelines cover the current fixed block portion of the system. Design guidelines for CBTC system will be incorporated in a future release.

7.4.7 Prevention of Side Collisions and Derailments

The signal system must ensure track switches are lined correctly and locked before a train is allowed to travel through. Refer to *Signals Engineering Standards Manual*, Section 3.4.5 for additional detail.

7.4.8 Grade Crossings

At all locations where LRT trains cross streets or sidewalks at grade level, adequate steps must be taken to ensure that a collision between the LRT train and vehicular or pedestrian traffic does not occur. This is done by incorporating the measures as described below into the design and as per the Transport Canada Guidelines

7.4.8.1 Levels of Warning

Generally, there are four levels of warning provided at grade crossings depending on the traffic conditions.

Level 1 - Separated grade crossing
Level 2 - Railway Crossing Warning Devices
Level 3 - Traffic lights
Level 4 - Signage

Refer to the *Signals Engineering Standards Manual*, Section 6.2 for the levels of warning, categories and their description.

7.4.8.2 Traffic Signal Pre-emption

Refer to Transport Canada Grade Crossing Standards (TCGCS) part F as a guideline to determine if pre-emption is required. Consideration should also be given to the MUTCD

For grade crossings requiring pre-emption, traffic signal pre-emption shall be used to allow the traffic system to flush the intersection clear and enter a phase that is permissive for the train to proceed uninhibited. Pre-emption points shall be determined based on gradient, speed profile, sight lines, and the minimum pre-emption time received from Traffic Operations. When the train reaches that predetermined pre-emption point, it shall send a request to the Traffic Controller via the VLC.

7.4.8.3 Mandatory Protection

For LRT tracks crossing roadways, other than railroad right-of-way, Transport Canada has no jurisdiction; however it is ETS's practice to adhere to the Transport Canada Grade Crossing Standards. Refer to Section 6.3 of the *Signals Engineering Standards Manual* for additional detail.

7.4.8.4 Control Design Criteria

Grade crossing signal control systems must be based on a failsafe design principle. This ensures that any failure of the grade crossing signal control system must activate the red flashing lights and bells and cause all equipped gate arms to descend.

Grade crossing protection must provide a minimum of 20 seconds warning time prior to the arrival of a train at the nearest edge of the crossing. The required time may require to be increased based on the geometry of the crossing. Refer to the *Signals Engineering Standards Manual*, Section 6.4.2 for more detailed criteria for warning time.

All grade crossing protection must be activated by track circuits to allow adequate warning time for trains approaching from all directions and routing on all tracks. A combination of track circuits and timers must be employed if track circuits alone fail to meet the operating requirements. Refer to Chapter 18 Streets Design, Section 18.5 Grade Crossing Safety.

7.4.8.5 Power

All grade crossing protection equipment must provide failsafe operation on a DC power system with battery back-up. Normal power to the enclosure that houses all of the control equipment and batteries can be AC power. To charge the batteries, the AC power must be rectified. Refer to the *Signals Engineering Standards Manual* for detailed information on grade crossing protection and the number of hours of back-up battery power that must be provided.

7.4.8.6 Call-On Signals

A two aspect (amber and green) call-on signal must be provided at the wayside to inform the Motorman that the grade crossing protection has been activated as requested. The call-on signal must be located at a distance from the crossing that is greater than the worst-case braking distance for a train traveling at posted speed. A train stop magnet associated with the call-on signal will initiate train braking if the train has failed to stop for the amber signal.

7.4.8.7 Pedestrian-Only Grade Crossings

Call-on signals are not required at pedestrian-only grade crossings but Crossing Warning Indicators (CWI) must be provided to inform motormen that crossing protection has been activated. A CWI is a white dwarf signal mounted to the outside of the track and is flashes when the crossing protection has been activated, once the gates are confirmed down the CWI will be steady lit.

For detailed design criteria on grade crossing protection, refer to the *Signals Engineering Standards Manual*, Section 6.0. Also refer to Chapter 18 Streets Design, Section 18.5.

7.4.8.8 Clearances

The location of all grade crossing protection equipment must comply with the static and dynamic clearance requirements presented in Chapter 3 of these Guidelines.

7.4.9 LRT Operation Functional Requirements

The key operational functions required by the LRT Controllers to operate the LRT Signals System can be found in the ATS operational manuals as referenced below:

- ATS Workstation User Guide: 3CU 05006 0054 PCZZA
- Human Machine Interface (HMI) Document: 3CU 05006 0125 DSZZA

7.4.10 Wayside LRT Signal Equipment

All wayside LRT signals equipment must be controlled by a stand-alone vital electronic interlocking computer system located in the SER or associated signal bungalow. Each vital computer system in the SER must operate all wayside signals equipment within its territory independently. If communication is lost to neighbouring territories, block information cannot be conveyed to or from adjacent territories. With a safety critical and failsafe LRT signal design system, the block signal at the border of the Territory must stay RED. This means a train must not be routed in or out of the territory automatically. If, however it is determined that the condition is safe, the LRT Controller may issue a Manual Route Clearance to the Motorman. This will allow the train at the border of the territory to proceed in or out of the territory with caution and at a restricted speed. ETS requires a highly reliable signal control system. Therefore, the control system must be a redundant, stand-alone, vital electronic interlocking computer system, with hot standby capability.

7.4.11 Communication Requirements for LRT Control

For the existing LRT signal system, network communications are used to transmit vital block information between the SERs. Non-vital network communications is also used to communicate to the central office.

In the event of a power failure, the signals network must be provide adequate battery backup power to keep the system operational. Refer to the *Signals Engineering Standards Manual*.

In addition to the existing multi conductor cables and fibre optic cables to link control/monitoring signals between the ETS Control Centre and the individual SERs along the mainline, radio and telephone lines are also used as part of the LRT communication system. Chapter 8, Communications and Control provides the design guidelines for these and other related communications systems.

7.4.12 Signal Aspects

Wayside signals provide information and authorization to the Motorman. The signal indication provides status of block ahead, grade crossing protection, and track switch position.

For detailed information on LRT wayside signals, refer to the *Signals Engineering Standards Manual*, Section 3.7.

Note: A three aspect signal must not be used in future LRT extensions.

7.4.13 ATS Interface

The ATS system is connected to the VLC in each SER via a Protocol Convertor. The Protocol Convertor talks to the ATS using Modbus. RP2000 protocol is used for the communication between VLCs and between the VLCs and ZC. The unit receives the status of the wayside equipment from the VLC's and forwards it on to the ATS servers in University server room. The ATS in turn updates the graphic indications on the MIMIC and display monitors at the ETS Control Centre, DLM and Local ATS (LATS), local control panels however are not updated by the ATS. Local control panels are local displays updated by the local VLC.

The ATS system also has a Local ATS Mode. This Mode allows a Signal Maintainer within a particular SER to take control when approved by Control and allows the Maintainer to issue

commands via the ATS system to Wayside Equipment within this Local ATS Area of Control only.

ATS server machines run the server side ATS application for the Edmonton LRT system. There are two ATS Servers and one of them is active and the other one is in passive mode. The operating system of the ATS server is capable of switching channels to the redundant link. These network interfaces are combined together through 3rd-party NIC teaming software and both appear to the network as a single virtual interface. Any fail-over between these interfaces is transparent to the network and to the application.

All signal system extensions must be compatible with the existing ATS system unless a totally new Control and Monitoring System is to be installed that is compatible with all other equipment in the existing system.

7.5 EQUIPMENT REQUIREMENTS

7.5.1 General

Due to the harsh weather conditions all new outdoor wayside equipment must be rated for temperatures that exceed the summer and winter conditions normally expected in Edmonton (refer to Chapter 1 General, Section 1.3 for local climatic conditions).

In addition, all outdoor equipment must meet the following requirements:

- Must be sufficiently reliable to meet the overall reliability targets of the project. i.e. the equipment has been used and is proven by other Transit properties operating in an environment similar to the Edmonton LRT System.
- Must be weather and water resistant as per applicable AREMA standards.

From an equipment maintenance perspective, it is desirable to minimize the number of different equipment suppliers for the following reasons:

- To eliminate interfacing requirements
- To minimize the amount of additional staff training (required for new systems)
- To maintain consistency in operational functionality
- To consolidate spares inventory and control

7.5.2 Numbering Schemes

All equipment, relay, contacts and terminals for all LRT extensions must be identified, located and numbered with a numbering scheme in accordance with the *Signals Engineering Standards Manual*, Section 2.0.

It is through the numbering system that a signal maintenance technician is able to identify where a specific point or piece of equipment is located within the system. The numbering scheme will be dependent on the location and line on which the equipment, relay, contacts and terminals are located.

7.5.2.1 Designation

Most equipment on the line is identified by the chainage location of the equipment in reference to the chainage zero reference point south of Churchill Station.

Signals (Block and Call-on) and speed checks have a unique identifier, indicating the track (NB or SB) and the distance it is from the chainage datum point (south of Churchill Station). For detailed information on the identification of signal equipment refer to the LRT *Signals Engineering Standards Manual*, Section 2.

Track switches are identified by a 3 digit number as follows:

- Even numbers are for the SB tracks i.e. Switch #488 is the switch on the SB track north of University Station
- Odd numbers are for the NB tracks i.e. Switch #533 is the switch on the NB track north of Belvedere Station

7.5.2.2 Consistency

Any extension on existing lines must follow the numbering scheme of that line. New lines may have a new numbering scheme that is in accordance with the *Signals Engineering Standards Manual,* Section 2.0. The numbering system for all new wayside signal equipment must be consistent with the existing numbering scheme as described above.

The numbering scheme for control wiring terminations and signal control must be also be consistent with the existing system (refer to the LRT Signals Engineering Standards Manual).

7.5.2.3 Switches and Signals

Refer to detailed information provided in the *Signals Engineering Standards Manual*, Sections 2.7.1 and 2.7.4 as well as the previous Section 7.5.2.1.

7.5.2.4 Track Circuits

Track circuits are designated by the track direction (NB or SB) plus an arbitrary number. The number of track circuits must be sequential and in an ascending order in one direction as the distance increases from Churchill Station. For example, TC S10 to TC S22 or TC N10 to TC N22 runs from Central Station to University Station.

For a track switch, where the switch is, must be named after the switch number i.e. TC488 for SW #488.

For additional detail, refer to the *Signals Engineering Standards Manual*, Section 2.7.2.

7.5.2.5 Bungalows and Junction Boxes

Bungalows should be named to reflect the chainage at that location.

Junction boxes or splitter boxes for the signal system located in a vault within the mainline ROW shall have the vault designated by a 3 digit number in an ascending order. Refer to Chapter 8, Communications and Control provides the design guidelines vaults and junction boxes.

7.5.3 Wayside Signals

7.5.3.1 Colour Light Signals

Based on failsafe signal design principles, filament signal lamps must be monitored by cold filament check. RED light or an AMBER light must have double element incandescent lamp, the principal and the secondary element. A “signal disturbed” alarm must be issued as soon as the principal element has burnt out.

All signal lights must be lit and complete with proper lenses and filters. The power supply for the LRT signal lights must come directly from the SER or WSC controlling that particular signal. The outgoing power must not be grounded (isolated power). Hoods on signal lights must be provided so that glare from the sun will not interfere with the Motorman’s vision. For future signal requirements LED signal aspects must be used, light-out detection must be provided via cold filament check with status information sent to the ATS system. LED light-out alarm must be failsafe. LED light-out must be equivalent to a red signal.

For additional detail refer to the Signals Engineering Standards Manual, Section 3.7.

7.5.3.2 Equipment Labelling

Label all new block signal and grade crossing protection call-on signal lights with white letters and numbers on black background to match existing.

Provide clear labelling for all new track switches and speed checks so that it is easily identified by the Motorman.

7.5.3.3 Location of Wayside Equipment

Location of all wayside equipment must be clear from the dynamic movement of the LRV's. For detailed information of on static and dynamic clearances (refer to Chapter 3, Clearances and Right-of-way and the figures contained therein).

7.5.4 Track Circuits

7.5.4.1 General

Each fixed block track circuit along the LRT ROW must be monitored by a vital track circuit device in the SER.

An audio frequency track circuit operates using specific audio frequencies. Adjacent track circuits utilize different frequencies so that track circuits can be distinguished from one another without the need for insulated joints. The occupancy is picked up in the SER by a solid-state circuit board rather than a physical relay but it too must operate in a failsafe manner. Audio frequency track circuits can be used in conjunction with insulated joints to improve the resolution of the track circuit limits. This is generally done at block signals and within special track work (crossovers).

7.5.4.2 Impedance Bonds

An Impedance Bond is a transformer that injects a track circuit signal onto the track so that it can be monitored to detect the presence of a train. The impedance bond also allows the 660 VDC nominal traction power return via the tracks. The traction return power can be of a magnitude of thousands of amperes so impedance bonds must be rated accordingly.

All LRT extensions using track circuits for train detection must be provided with the following:

- Impedance bonds and insulated joints to define the limits of track circuits.
- Vital track circuit devices for the detection of train occupancy.

7.5.4.3 Switch and Rail Bonding

Between each set of adjoining insulated tracks, impedance bonds must be installed with the centre taps via high current carrying cables to carry the 660 VDC nominal traction power return from track to track and back to the traction power substation rectifiers. The size and number of cables shall be designed in conjunction with the Traction Power system design. Cable connections must be corrosion protected.

At a cross-over, the SB track and NB track are physically joined. Insulated joints must be installed at both rails midway of the cross-over between the SB straight run track and NB straight run track in order to separate the two straight run track circuits. The track switch associated with each straight run track must be bonded to the rails to ensure low resistance for the traction return power at the switch. Thermite-welding or approved bolt-on technologies are used to connect the bonding cable to rails. For detailed information on location of bonding cables refer to the *Signals Engineering Standards Manual*.

Methodologies shall be implemented to discourage theft of the bonds.

7.5.4.4 Cross-bonding

Cross-bonding consists of a number of multi-stranded, flexible cables in the traction power return of the 660 VDC nominal traction power distribution system. They are connected between the impedance bonds of a track and the impedance bonds of the adjoining tracks separated by insulated joints.

This bonding is required at the midpoint of the track cross-over; and at the end station rails for the SB track and NB track (refer to the arrangement at Clareview Station). The purpose of the cross-bonding is to equalize the rail voltage drop between the NB and SB tracks. The size and number of cables shall be chosen in conjunction with the traction power system.

7.5.4.5 Rail Connections

Where there is an insulated joint, the rails must be insulated from the steel bolts and nuts.

Bonding cables must be connected to rails with thermite-welded connectors, or Cembre connectors, where possible. Other rail connection technologies may be considered as an option provided that the connector is rated for minimum 1000 A DC.

7.5.4.6 Broken Rail Detection

Broken rail detection shall be provided.

7.5.5 Powered Track Switches

7.5.5.1 Mainline Power

Power feeding the wayside powered track switch motor, must come directly from the SER or bungalow controlling that particular switch machine. The status of the powered track switch must be reported to the SER at all times. Status condition must include switch normal, switch reverse, switch locked, and alarm status. Alarm status must include switch disturbed or trailed conditions.

All motorized track switches must also allow field and manual operation. There will be a key located inside the "H" fixture to enable the push buttons located also inside the "H" fixture. These push buttons will initiate the switch machine movement from the field. To manually operate the switch machine, insert the hand crank which will also cut the power to the switch machine thus preventing the switch machine from movement due to a command from the office.

7.5.5.2 Embedded in Street

Switches shall not be installed in embedded track.

7.5.5.3 Insulation

The motorized track switch shall be well protected, electrically isolated and bonded to ground so that the public is not exposed to live power.

The motorized track switch gear must be insulated and heated to permit operation in a -40°C ambient temperature. The switch gear assembly must also be rust-proof and weather-proof.

7.5.6 Manual Track Switches with Switch Point Indication Interlocks

For manually operated track switches, a switch point indicator must be installed. This switch point indicator provides the status of the switch conditions i.e. switch normal, switch reverse,

switch disturbed. If it is out of its normal position, the signal system must prevent all train movements routed through that particular switch.

7.5.7 Route Key Switch

For fixed block systems, provision must be made to allow the Motorman to manually request a route from an LRT station platform to the next station.

The route request must be done via a keyed push button inside a locked enclosure on the wayside. The special key for the route selection enclosure must match existing keys used by the Motorman.

7.5.8 Interlocking

7.5.8.1 General

The LRT signal system consists of the following main components:

- Vital logic control system.
- Train traffic and wayside signals.
- A non-vital system for train movement display, wayside equipment status display and command request during manual operation.
- A communication system that inter-connects the vital and non-vital system to allow it to function as an integrated system.

7.5.8.2 Vital System

The vital computerized control system consists of an ElectroLogIXS VLC microprocessor with both vital and non-vital processing capability. Vital input/output (I/O) cards must be utilized for driving signals and switch machines while non-vital communications and protocols provide an interface to the ATS system. Power for the total system must be backed-up by UPS and generator backup power.

The vital computerized control system is able to communicate with its adjacent SERs to exchange vital block information. This communication will be a fully redundant network. The communication between territories must be considered as an integral part of the vital system.

7.5.8.3 Non-Vital System

The ATS system is classed as a non-vital system and not safety critical because it does not have the capability to directly control wayside equipment. The vital logic system directly controls the wayside equipment. However, when the vital logic system in the SER requires human intervention, the ATS system must be able to put the territorial vital logic system in manual operating mode. LRT Control must be able to send command requests from the ETS Control Centre to the territorial vital logic control system for execution. The vital control system must mitigate any controls received to ensure only safe results occur. Refer to the following section 7.5.9 for additional details.

7.5.9 Central Traffic Control System

7.5.9.1 System Configuration

<u>General</u>

The ATS carries out such tasks as data acquisition, monitoring, presentation, and data archiving function.

It must also assist in performing tasks such as manual train routing, train tracking functions, and processing of train and crew data.

Functions within the ATS exist to allow for information storage and retrieval, playback of rail operations, and simulation of rail operations.

The ATS system includes report generation functions, user interface displays of the LRT network, and a repository of online documentation.

System Software

Future releases of ATS software must be built on the ETS approved versions.

Network Infrastructure

The ATS system must be distributed over several LRT facilities using a redundant network.

Basic Requirements

The existing ATS servers at the University Server Room record the status of all wayside signal equipment and all control activities on the ATS system. Administrators of the ATS system can retrieve all recorded data or play back the event recorded in the system. Any proposed LRT extensions must be able to provide the same information to the existing ATS system.

System Uniformity

Any new signal systems connected to the ATS system must function identically to the existing systems. The steps that a user must perform to execute a command on the ATS must be the same, regardless of the signal system to which the command is being issued. All future LRT Signal control systems must be compatible with the existing ATS system in all aspects. Any signal contractor commissioned to extend the existing signal system must budget funds to the supporting ATS software vendor to perform any required software updates to the ATS software, graphical user interface and gateway devices. Whenever possible, the communications protocol between the vital field processing equipment and the ATS must be a common protocol (e.g. Genisys).

7.5.10 Grade Crossing Equipment

7.5.10.1 Grade Crossing Warning Devices

LRT trains must have absolute priority and pre-emption at all grade crossings, the pre-emption allows flushing of road traffic, and a traffic light phase that holds road traffic and allows for train operation.

To ensure LRT priority, all grade crossing signals must be equipped with red flashing lights and bells. If a road crossing includes a pedestrian crossing, additional protection must be added as described in section 7.5.10.2.

Crossing construction must be in accordance with the *Signals Engineering Standards Manual*.

Flashers

300 mm LED Red flashing lights along with railroad crossing signs must be installed to provide grade crossing protection for roads and sidewalks as indicated in the *Signals Engineering Standards Manual*.

Bells

According to Transport Canada grade crossing standards, bells are required for all grade crossings. Grade crossing bells in accordance with the AREMA standard or that have a proven service record in Edmonton's environmental conditions must be installed on crossing signal masts as indicated in the Transport Canada Crossing Regulations. Each bell must have an adjustable volume and be set at a level that complies with section 6.5.6 of *Signals Engineering Standards Manual.* The placement, direction, and sound level of the bells may be

considered. Safety of motorists and pedestrians at LRT crossings is the primary concern and will be the determining factor in designing the crossing warning system configuration.

Gate Arms

Grade crossings shall be equipped with active grade crossing gate arms. Gate mechanism and gate arm assembly construction shall be in accordance with the Signals Engineering Standards Manual. Gate arms shall be perpendicular to the roadway while in the horizontal position. The tip of the gate arm must be a minimum of 3.66 m (12 ft.) away from the nearest rail while in the horizontal position.

7.5.10.2 Pedestrian-Only Grade Crossings

For pedestrian-only grade crossings, protection must be added in the form of crossing signals equipped with 8-3/8" red flashing lights, railway crossing signs (80% size), bells and pedestrian swing gates and active grade crossing gate arms.

7.5.11 Bungalows, and Junction Boxes

All bungalows and junction boxes must be corrosion and weather-proof with heat and insulation provided, if necessary for the equipment installed at that location. Bungalows shall have HVAC and shall allow for venting of the battery gas and a safe air exchange rate.

All bungalows and junction boxes must be sealed to prevent access of insects and rodents.

All bungalows and junction boxes for the wayside LRT signal equipment must be clear of the dynamic clearance envelope as described in Chapter 3, Clearances and Right-of-Way.

7.5.12 Signal Room

7.5.12.1 General

The existing signal control system is divided into 9 territories as described in Section 7.1.2.1.

For LRT, the vital logic signal control system (refer to Section 7.1.2.2), must be an electronic interlocking installed in a SER controlling the wayside signal equipment for that specific territory. It is integrated with the existing vital relay logic system and the ATS system to form an integrated LRT signal system compatible to the existing system.

Refer to the *Signals Engineering Standards Manual*, Section 4.0 for the detailed requirements for signal room equipment.

Each SER must have an emergency generator dedicated to provide power to all of the signal room equipment in the event of a power outage.

7.5.12.2 Signal Room Requirements

Climate Control

All equipment installed in the SER must be capable of operating over a temperature range of 0°C to 35°C.

The HVAC system must maintain the room temperature at 20 C all year. Humidity and dust control is also required to protect sensitive electronic equipment and relays. Battery venting and safe air exchange shall be considered with the HVAC design.

Computers

A local control panel/computer referred to as the system administration work station for emergency access to the new LRT territory vital computerized signal control system should be provided. Also required are datalogger computers or ModBus Converter units to connect the any new signal control system to the ATS system.

Communications Room

Communication linkages are vital components in the LRT vital signal control system. It is a collapsible fibre optic communication network which can be added to any future fibre node network system. Sufficient space should be provided to house the following communication equipment LRT vital signal control system,

- Connection to SER vital logic system
- Connection to ATS system
- Telephone system

In the event that the communication room is used by other systems, such as Fare Collection, CCTV, radio and PA, additional space shall be provided.

7.5.13 Signal Room Power Supply

7.5.13.1 Sources

Normal incoming power supply requirements to the SER are:

- 347/600V, 3 phase, 4 wires (grounded neutral), 60 Hz normal commercial power
- 347/600V, 3 phase, 4 wires (grounded neutral), 60 Hz diesel generator backup power

In addition the following is to be provided:

- Power transformers to step-down normal 600Vac building power to 120/208V.
- 3 phase, 4 wires (grounded) for building 120/208 V power.
- Building heating and ventilation system must be with dust and humidity control.
- DC power supply for all essential communication equipment.
- All DC powered equipment must be complete with battery backup power.

All computer equipment must also be provided with surge protection and UPS power to take care of the momentary power surges due to emergency power transfer switching.

7.5.13.2 Distribution

All LRT wayside signal lighting equipment, track switch motors, speed checks, track circuit monitoring equipment and other essential equipment must be powered directly from the signal room emergency power.

Step-down power transformers and battery rectifiers are to be provided as required.

7.5.13.3 Ground Isolation

Grounding and bonding systems shall meet AREMA Communications and Signals Manual, Part 11.

Ground fault detection and alarms must be required to monitor all outgoing ungrounded power system. All ground fault alarms are to be reported to the ETS Control Centre via the ATS system.

7.5.13.4 Surge Protection

Proper use and interconnection of Surge Suppression Devices (SPD) shall be provided for all power and control circuits entering and exiting an SER Bungalow.

7.5.14 Wire and Cable

7.5.14.1 Standards

Wire and cable shall be in accordance with the Canadian Electrical Code, Table 19 and AREMA Communications and Signals Manual Part 10.3 and install cable according to AREMA manual Part 10.4. The physical and electrical properties of the external signal cable and the related test methods and procedures may comply with the CP-100 SCM-S-0930-01, Specification for 600V Polyethylene Insulated and Jacketed Railway Signal Cable.

CSA C22.2 No. 75, Thermoplastic-Insulated Wires and Cables standard should be used for wire and cable insulation.

The insulation material on external cables should be properly vulcanized black ethylene propylene rubber compound (EPR) or other AREMA compliant material as accepted by the City. The insulation shall have moisture, chemical, mechanical and heat resistance characteristics, suitable for an installed temperature of -40°C and maximum continuous operating temperature of 90°C.

The insulation material of wires shall be Ethylene Tetrafluroethylene (ETFE) Fluorocarbon Resin, clean stripping, suitable for continuous temperature of 150°C. The insulation shall meet the dimensional, electrical and physical properties in AREMA Communications and Signals Manual, Part 10.3.24.

Cables and wires installed in areas designated by the City as tunnel sections and confined public areas:

- Cables and wire should comply and be installed in conformance with NFPA 130-8.6.7
- Cables and wire should be Low Smoke, Halogen Free type compliant with AREMA Communications and Signal Manual Part 10.2.13
- Cables and wire should be tested Boeing Specification Support Standard BSS-7239 and comply with the following maximum gas release limits:
    - Carbon Monoxide (CO) - 3500 ppm;
    - Carbon Dioxide (CO_2) - 90000 ppm;
    - Hydrogen Fluoride (HF) - 200 ppm;
    - Nitrogen Dioxide (NO_2) - 100 ppm;
    - Hydrogen Chloride (HCl) - 500 ppm;
    - Hydrogen Cyanide (HCN) - 150 ppm;
    - Sulphur Dioxide (SO_2) - 100 ppm;
    - Hydrogen Bromide (HBr) - 100 ppm.

<u>Fibre Optic</u>

All new fibre optic cable strands must be compatible with the existing fibre strands.

Existing fibre optic strands are single mode, 1310 nm bi-direction type, with fusion splices and SC connectors at fibre node patch panels.

For additional standards refer to Chapter 8 Communications and Control, Section 8.8.4.3.

<u>Wire Identification</u>

- All control conductors must be labelled and tagged at both ends to identify the source and destination.
- Colour coding should be used where possible.
- All wires must have manufacturer's name, month and year of manufacture, wire number, for multi-conductor cable, if not colour coded.

Wire Testing

NFPA 262 - Standard Method of Test for Flame Travel and Smoke of Wires and Cables for Use in Air-Handling Spaces should be used for testing wires.

All conduits running under the rails must be insulated to avoid accidental grounding or shorting out of the rails thus causing nuisance false occupancy of the track circuit.

7.5.15 Spare Parts

To ensure the LRT Signal Control system down time is minimized, a sufficient quantity of essential spare parts for related equipment must be provided. Supply a quantity (10%) of spare parts or replacement components to permit replacement of each product (minimum of one spare) used in the work from each on-Site location or maintenance shop where ETS will maintain inventory of that part. All spare parts must be identical to the items being placed in service.

7.5.16 Duct Banks

The signal duct bank is comprised of a suitable number of four (4) inch FRE or PVC ducts. The duct banks terminate at concrete vaults placed along the LRT ROW. Ducts for other communication services or for power cables may be located in the same trench. 600 VDC cable ducts must not run parallel to the tracks. It is preferred that they be kept as far away as possible (minimum separation is 1.0 m).

700 VDC (no load) traction power duct bank must be kept separated from the control system power and signal duct bank. They must meet the CEC requirements.

Control cables coming out from of a vault to a termination panel for wayside field equipment connection must have the termination panel above grade. Termination panels must be weather-proof.

Vaults must meet the following requirements:

- Have adequate provision for drainage,
- Have a copper grounding bus each with their own ground rods,
- Power ducts can only terminate in a power vault,
- Power cable vault must not be used for communication or control cables,
- Each vault must be labelled with a 3 digit identification number, in a sequential order (refer to Section 7.5.2).

Refer to Chapter 11 Electrical Systems, Section 11.13 for detailed duct bank guidelines.

7.5.17 Knife Switches

The knife switches are employed as a manual method of control for crossing warning systems on the Capital and Metro Lines. Each crossing is equipped with one knife switch for each track, each knife-switch controlling operation of the crossing(s) relative to the track it is associated with. Knife switches are rated to be utilized in Class I AREMA vital circuits. The switch has three effective positions:

- downward vertical position making electrical connection to the AUTO input circuit
- middle position making no electrical connections
- upward vertical position making electrical connection to the BYPASS input circuit

The knife switch statuses are passed to the governing train control system. When CBTC is employed, the zone controller normally controls knife switch functions instead of the local crossing controller.

The two input states are defined as:

- AUTO (Low = NOT AUTO, High = AUTO)

- BYPASS (Low = NOT BYPASSED, High = BYPASSED)

Where a crossing warning system provides warning for trains operating on the track governed by a knife switch, the following table defines the behaviour of the crossing for that track:

AUTO	BYPASS	Crossing State for Associated Track	Crossing Behaviour Associated with this Knife-Switch
LOW	LOW	MANUAL	Crossing will be activated indefinitely.
LOW	HIGH	BYPASS	Crossing will be unresponsive to approaching trains on this track, acting as though no trains are approaching on that track.
HIGH	LOW	AUTO	Crossing will activate normally with trains operating on this track.
HIGH	HIGH	INVALID	Crossing will be activated indefinitely. Where CBTC is employed, the crossing is declared unhealthy.

7.6 INTERFACE REQUIREMENTS

The signal system must be designed to properly interface with other major system elements as follows:

7.6.1 Trackwork

Posted or allowable speed is affected by radius of curves, vertical grades and super elevation.

Speed monitoring and control may be required.

7.6.2 LRV's

Placement of signals, junction boxes, and speed checks will be affected by the LRV clearance profile and braking including the Guaranteed Emergency Brake Rate (GEBR) characteristics.

The interface between the Train Borne Equipment and the LRV is categorized into Motorman, mechanical, electrical (discrete) and electrical (communications). Commands to subsystems may be shared by more than one subsystem (e.g. emergency brake train line is shared by the disc brakes and propulsion units).

7.6.3 EMC

Any interfacing equipment or system, including its track circuits where applicable, must be electromagnetically compatible with the worst-case conducted and inductive emissions from the ETS LRVs and traction power system and overhead contact wire, as well as from City and neighbour radio systems.

Any equipment for interface purposes should conform to IEEE STD 1100-1999, Recommended Practice for Powering and Grounding Sensitive Electronic Equipment. Emissions of signal equipment shall conform with EN50121-4:2006, "Railway applications Emission and immunity of the signalling and telecommunications apparatus.

7.6.4 Power

Ratings/specification of transformers must match available power source.

7.6.5 Traction Power Substation

The LRT signal design must recognize that negative traction power is connected to rails via the centre tap of the impedance bond.

7.6.6 Overhead Catenary

Any sudden change in gradient, such as approaches to stations or tunnels, may require a lower posted speed. This condition may require speed monitoring and control.

7.6.7 Traffic Signals

Whenever a road or pedestrian crossing is required, the signal system must be properly coordinated at these locations as it impacts on:

- Approach time,
- Extended approach time,
- Type of grade crossing protection required.

The signal system must be compatible with the vehicular traffic controller to optimize intersection capacity, location, and speed of train.

The Capital Line and Metro Line utilize an advanced interface to the traffic control system that does provide absolute priority to train movements but also provides a targeted pre-emption function that should help to minimize disruption to vehicular traffic movements through the LRT corridor.

Trains must pre-empt traffic signals on approach to a grade crossing with consideration of two data points from the traffic controller included in the vital circuitry of the LRT signal system that allow a train to be held in a station to wait for an optimal point in the traffic cycle to be released.

The data points are:

- Traffic OK – True if all components of the traffic controller are operating correctly. If this point is not true, all data received from the traffic controller will be ignored by the LRT signal system.
- Hold In Station – True if the traffic controller requires the train to wait in the station for an optimal point in the traffic cycle to be released.

<u>Civil Facilities</u>

Grade crossing protection of roadways is required. The signal design must ensure adequate call-on time. The speed across the road may have to be monitored/controlled.

The location of insulated joints, signals, and track magnets must be coordinated with design of the station platform. Where trains stop at the platform should also be considered.

Speed monitoring and control may be required as trains approach tunnels and overpasses.

7.7 RESPONSIBILITIES

7.7.1 Signal System Contractor

The Contractor must provide the following:

- The detailed system design specification of the any new LRT signal systems. The design must be compatible to the existing Edmonton LRT signal systems. Refer to Section 7.7.3 for Design Deliverables and Contractors Submittals.
- The supply and installation all other equipment and material necessary for a fully functional signal system, including, but may not be limited to:
    - electronic interlocking computers

  - signalling and communication systems
  - relays
  - power transformers
  - electrical distribution panels
  - track switch machines
  - wayside junction boxes
  - signal equipment
  - wheel detectors or sensors
  - track magnets
  - all grade crossing protection equipment
  - track bonding's
  - UPSs
  - Impedance bonds
  - Knife switches
  - Wayside supervisory system
  - Vital control equipment
- The testing of the completed installation integrated with the ATS System. It must be demonstrated to ETS that the new integrated system meets the functional and performance specification requirements and complies with all applicable codes and standards.

7.7.2 Deliverables

7.7.2.1 Design Plans and Specifications

The Contractor must provide the preliminary design to ETS for review and approval prior to the preparation of detailed construction plans and specifications.

In the process of developing the detailed plans and specifications (based on the approved preliminary design), the Contractor must submit the documents to ETS for review and approval.

The Contractor must not provide further submittals to ETS until the previous submittal has been reviewed and commented on by ETS and the Contractor has incorporated the previous review comments in the forthcoming submittal. It is the Contractor's responsibility to keep track of all submittals and comments from ETS.

7.7.2.2 Contractor Submittals

The Contractor must submit drawings and system descriptions to ETS for review and approval in both electronic format and hard copy. It is the responsibility of the Contractor to keep track of their submittal and ensure ETS's comments have been incorporated in the upcoming submittals.

The Contractor must not purchase any equipment until approval has been granted in writing by ETS. ETS's signature on the Contractor's submittals does not release Contractors from the responsibility of ensuring the proper operation and the integrity of the installation of the system equipment.

7.8 TESTING AND COMMISSIONING

For detailed information on commissioning and testing of the signal system refer to the *Signals Engineering Standard Manual*, Section 8 as well as Chapter 1 General, Section 1.6.

All testing and commissioning will be carried out in the presence of the City or the Engineer. All testing and commissioning activities must be performed in sequence on all systems, subsystems, assemblies, subassemblies, components purchased or designed and software or

firmware provided. Software test documentation should be in accordance with IEEE Standard 829, Standard for Software Test Documentation.

Proper testing and commissioning test plans, procedures and schedule for testing should be laid out for ETS review and acceptance before performing any testing in the field. All prerequisite acceptance tests must be performed prior to the applicable integration test. Independent, qualified and experienced test personnel should perform the tests or supervise the testing. Valid calibration certificates must be provided for all the test instruments, certified by an authorized laboratory.

The original testing documents and test reports should be submitted to ETS as a part of testing document package.

The Contractor must not ship any LRT signal equipment until factory tests have been completed, accepted and signed off by the City or the Engineer.

The results of testing and commissioning must be assembled in the O&M Manuals (refer to Chapter 1 General, Section 1.7.2)

7.9 TRAINING REQUIREMENTS

The Contractor must conduct comprehensive training courses to all users on the new system. Training groups will generally consist of:

- LRT Controllers, supervisors
- LRT signals hardware maintenance personnel
- LRT signals software maintenance and system administrators
- Overview presentation and introduction to ETS (LRT) management

All training must be provided in Edmonton at the D.L. Macdonald Maintenance Facility training boardrooms, where possible. Training schedules shall be conducted in a manner that it does not impact the ongoing operation and maintenance of the LRT system. All training schedules must be approved by ETS, LRT Section.

In addition the Contractor is required to ensure that the following requirements are met:

- All necessary high quality (resolution) training materials and equipment for classes is provided.
- Instructional aids like handouts, slides, transparencies, videos, simulators as well as supplemental material for functional mock-up or functional representation.
- Hands-on training is included in each training session.
- Training is provided to all system operators, including LRT Controllers, prior to the beginning of the system availability test.
- Training material sufficient to support continued in-house training by ETS (LRT).
- Use written or practical tests to determine adequate transfer of knowledge to the trainee.

Training Materials must meet the following requirements:

- Be targeted for the particular training group.
- Be written in simple English and is clear and precise.
- Include as much illustrations, tables, charts, graphics and computer screen-prints as possible.
- Include sufficient detail and classroom exercises, materials and demonstrations.
- Include safety procedures and instructions.
- A complete final draft to be submitted to ETS for review and acceptance prior to distribution to all trainees.
- Both paper copies and CD-Recordable electronic format of accepted material to be provided.

The training material will become the trainee's reference document. The Instructor or Author who prepares the training material must not assume that the trainee knows any part of the system prior to training. To assist the trainee in understanding the subject matter better, provide numerous examples.

ETS reserves the right to copy all training manuals and aids for use in future ETS conducted training courses.

7.10 RECORD DOCUMENTS

Refer to Chapter 1 General, Sections 1.7.1 and 1.7.2 and Appendix I to that chapter for the detailed requirements for Plan of Record drawings and O & M Manuals.

LRT DESIGN GUIDELINES

Chapter 8

2017 EDITION – Revisions Tracking Form

Section	Reference	Revision General Description	Issue Date
All	Entire Text	Chapter 8 – Communications and Control has undergone significant revision from the 2011 version.	July 2017

8.0 COMMUNICATIONS & CONTROL

		Page
8.0	**COMMUNICATIONS & CONTROL**	**1**
8.1	ACRONYMS AND ABBREVIATIONS	1
8.2	CERTIFICATIONS	4
8.2.1	Railway Certifications	4
8.2.2	Other Certifications	4
8.2.3	Regulatory Compliance	4
8.2.4	Hazard Level Classification	4
8.2.5	Electrical Safety Compliance	4
8.2.6	EMC Compliance	4
8.2.7	EMC Immunity	5
8.2.8	Environmental Compliance	5
8.2.9	Safety Standards Compliance	5
8.2.10	Telecom Interface Compliance	5
8.2.11	Electromagnetic Compatibility	5
8.3	INTRODUCTION	5
8.3.1	Fares System	5
8.3.2	Building Management System (BMS)	5
8.3.3	Supervisory Control and Data Acquisition (SCADA)	6
8.3.4	Telephone Systems	6
8.3.5	Public Address (PA) and Variable Message Sign Systems (VMS)	6
8.3.6	Radio System	6
8.3.7	Closed Circuit Television (CCTV)	7
8.3.8	Signals Network	7
8.3.9	Other Subsystems	7
8.4	APPLICABLE CODES, STANDARDS, REGULATIONS, PRACTICES	7
8.5	DESIGN REFERENCE DOCUMENTS	7
8.5.1	General	8
8.5.2	BMS	8
8.5.3	Public Address System	8
8.5.4	Radio System	8
8.5.5	CCTV	8
8.5.6	Security System	8
8.5.7	Other LRT Control Systems	8
8.5.8	General Design Objectives and Requirements	8
8.6	COMMUNICATION EQUIPMENT ENVIRONMENT	12
8.6.1	Introduction and Overview	12
8.6.2	Control Centers	12
8.6.3	Data Centers	15
8.6.4	Communication Rooms	17
8.6.5	Wiring Closets	19
8.6.6	HVAC General	19
8.6.7	Powering and UPS	19
8.6.8	Overall Workmanship	20
8.7	COMMON INFRASTRUCTURE ENVIRONMENT	20
8.7.1	Introduction and Overview	20

8.7.2 Communications Common Infrastructure 21
8.7.3 Communication Room Common Infrastructure 21
8.7.4 Network Architecture 21
8.7.5 Fibre Optic Cable System 21
8.7.6 Copper Cable Network 22
8.7.7 Remote Device Powering Methods 22
8.7.8 Surge Arrestors 23
8.7.9 Entrance Conduits and Terminal Blocks 23
8.7.10 Low Voltage Conduits & Distribution 24
8.7.11 Station Telephone Distribution 24
8.7.12 Equipment Racks & Cable Tray Assembly 24
8.7.13 Cable Tray Structure 24
8.7.14 Ancillary Equipment 25
8.7.15 Communication Room Size 25
8.7.16 Environmental 25
8.7.17 Grounding 25
8.7.18 Wayside Facilities 26
8.7.19 Station Facilities 26

8.8 COMMUNICATION CABLING GENERAL REQUIREMENTS 29

8.8.1 General Considerations 30
8.8.2 Quality 30
8.8.3 Design Factors 31
8.8.4 Outside Plant Cabling 31
8.8.5 Station/Facilities 38

8.9 SYSTEM NOMENCLATURE AND CONVENTIONS 39

8.9.1 Cable Labeling and Identification 39
8.9.2 Cabling and Wiring Color Code Conventions 40

8.10 COMMON SOFTWARE ENVIRONMENT 40

8.10.1 General 40
8.10.2 Identity Management 41
8.10.3 DNS, DHCP and IP Address Management 41
8.10.4 Security 41
8.10.5 Remote Access 42
8.10.6 Monitoring and Alarming 42
8.10.7 Configuration Management 42
8.10.8 Software 42
8.10.9 Software Updates and Lifecycle 44
8.10.10 Logging, Big Data and Analytics 44

8.11 FARES SYSTEM 45

8.12 BUILDING MANAGEMENT SYSTEM (BMS) 45

8.12.1 BMS Definitions 46
8.12.2 Nomenclature General Structure 46
8.12.3 General Description 47
8.12.4 BMS Operation and Maintenance Manuals 49
8.12.5 BMS Equipment Requirements 49
8.12.6 Requirements for the BMS Monitoring and Control of Systems 50
8.12.7 Control Logic Software, Graphics and Alarming Requirements 54
8.12.8 Training 55
8.12.9 Documentation 55

8.13 CCTV 55

8.13.1 Applicable Codes, Standards, Regulations and Practices 55
8.13.2 Product Acceptability 56
8.13.3 Naming conventions 56
8.13.4 Architecture 56
8.13.5 Archiving - Video Archiver Servers 79
8.13.6 Multicast Scheme 80
8.13.7 Alarm Connections 80
8.13.8 Monitoring and Alarming 80
8.13.9 Remote Management and Access 82
8.13.10 Cameras & Programming 83
8.13.11 Required site coverage / CCTV Camera Views 105
8.13.12 Cabling methods 108
8.13.13 Camera Poles 109

8.14 PA/VMS 109

8.14.1 General 109
8.14.2 Existing PA/VMS System 109
8.14.3 Applicable Codes, Regulations and Standards 111
8.14.4 Functional Requirements 111
8.14.5 Location Considerations 112
8.14.6 System and Component Design Requirements 112
8.14.7 Interfacing Requirements 114
8.14.8 Amplifiers 115
8.14.9 Signs 115
8.14.10 Installation and Design of Signs 116
8.14.11 Naming Conventions 117
8.14.12 Microphones 117
8.14.13 Integration to the Central Phone System 117

8.15 TELEPHONE SYSTEMS 117

8.15.1 General 117
8.15.2 Functional and Phone Equipment Requirements 117
8.15.3 Naming conventions 118
8.15.4 Extension convention 118
8.15.5 Monitoring of devices 118
8.15.6 Automated Device Testing 118
8.15.7 Integration to PA/VMS 118
8.15.8 Redundancy 118
8.15.9 Phones 119
8.15.10 Phone System Cabling Methods 120
8.15.11 Phone System Powering Methods 121
8.15.12 Phone programming 121
8.15.13 Central management of all help phone devices 121
8.15.14 Enclosures, Panels and Backboards 121
8.15.15 Call recording 121
8.15.16 Camera Behavior with Help phones 122
8.15.17 Caller ID conventions 122
8.15.18 Distribution Design Requirements 122

8.16 RADIO SYSTEMS 122

8.16.1 General 122
8.16.2 Portable radios 123
8.16.3 Mobile Radios 124

8.16.4 Installation standards 124
8.16.5 Tunnel Radio system 124
8.16.6 Industry Specs for all devices 124
8.16.7 Network connection to AFRRCS 125
8.16.8 Redundancy 125
8.16.9 Console Programming 126
8.16.10 Call recording 126
8.16.11 Monitoring of devices 126
8.16.12 Talk groups 126
8.16.13 DAS 127
8.16.14 BDAs 127
8.16.15 Radiax and installation 128
8.16.16 Coax and installation 128
8.16.17 Coverage expectations 129
8.16.18 Ground Level Stations (including terrestrial coverage) 129
8.16.19 BER measurements 129
8.16.20 Radio System Replacement 129

8.17 SIGNALS NETWORK 130

8.17.1 Conventions 130
8.17.2 Architecture 130
8.17.3 Device requirements 130
8.17.4 Redundancy 130
8.17.5 Monitoring of Devices 130
8.17.6 Signals Fibre Backbone 130

8.18 TRACTION POWER NETWORKS 131

8.18.1 EPCOR RACIs 131
8.18.2 Architecture 131
8.18.3 Naming conventions 131
8.18.4 Transfer Trip 131
8.18.5 SCADA control 131
8.18.6 Redundancy 131
8.18.7 Device requirements 131
8.18.8 Traction Power Fibre Backbone 131
8.18.9 Monitoring of Devices 132
8.18.10 Optical Isolation 132

8.19 OTHER SUBSYSTEMS 132

8.19.1 Card Access System 132
8.19.2 Public Wi-Fi 132
8.19.3 Third Party Advertising 133
8.19.4 Third Party Connectivity 133

8.20 TESTING AND COMMISSIONING 134

8.20.1 Installation, Testing, Manuals, and Training 134
8.20.2 Testing and Inspection of Equipment and Systems 135
8.20.3 System Demonstration 135
8.20.4 Final Inspection for Completion of Contracts 136

8.21 RECORD DOCUMENTS 136

8.21.1 Project Record Drawings 136
8.21.2 Operation and Maintenance Manuals 137

8.22 GENERAL EQUIPMENT AND SPARING 138

List of Figures

Figure 1 - Handhole Lid Integrated into Platform
Figure 2 - Preferred Access Hatch
Figure 3 - Above Platform Layout
Figure 4 - Preferred Cable Layout in Cable Tray
Figure 5 - CCTV Interface Subsystems
Figure 6 - Tunnel Intrusion Detection System Physical Layout
Figure 7 - Varifocal Lens Selection
Figure 8 - Varifocal Lens Models
Figure 9 - CBTC under “Existing train tracking & user inputs”

List of Appendices

APPENDIX A	SYSTEM INTERFACE MATRIX
APPENDIX B	TYPICAL EMERGENCY PHONE DETAILS
APPENDIX C	TYPICAL STATION CCTV SYSTEM BLOCK DIAGRAM
APPENDIX D	COMMUNICATIONS INFRASTRUCTURE COMPONENTS
APPENDIX E	TYPICAL COMMUNICATIONS ROOM LAYOUT
APPENDIX F	COMMUNICATION ROOM RACK & CABLE TRAY LAYOUT
APPENDIX G	TYPICAL COMMUNICATIONS AND SIGNAL VAULT
APPENDIX H	INDUSTRY STANDARDS AND CODES

8.0 COMMUNICATIONS & CONTROL

8.1 ACRONYMS AND ABBREVIATIONS

Acronym	Description
ABC	Alberta Building Code
ADFS	Active Directory Federation Services
AM&PW	Asset Management and Public Works Buildings and Facilities Maintenance Section
AODA	Accessibility for Ontarians with Disabilities Act
AWG	American Wire Gauge
BCP	Best Common Practice
BDA	Bi-Directional Amplifier
BER	Bit-Error-Rate
BICSI	Building Industry Consulting Services International
BLSR	Bi-directional Line Switched Ring
BMS	Building Management System
CATP	Customer Acceptance Test Plan
CCD	Charge Coupled Device
CCTV	Closed Circuit Television
CLG	Cooling systems monitoring and control
CMO	Carbon Monoxide condition monitoring
CTC	Centralized Train Control
CWDM	Course Wave Division Multiplexing
DA	Directory Access
DAS	Distributed Antenna System
DDC	Direct Digital Control System
DMVPN	Dynamic Multipoint Virtual Private Network (DMVPN) technology
DSD	Design Services Document
DSP	Digital Signal Processing
DVR	Digital Video Recorder

EDACS	Enhanced Digital Access Communication System
ELC	Electrical Systems Monitoring
ELV	Elevator Monitoring and Control
ESC	Escalator Monitoring and Control
FIR	Fire Suppression Systems Monitoring
FOSC	Fibre Optic Splice Closure
FPS	Frames Per Second
GAS	Natural Gas System Monitoring and Control
GbE	Gigibit Ethernet
GEN	Generator Systems Monitoring
GEX	General Exhaust Systems Monitoring and Control
GLY	Glycol Heating Systems Monitoring and Control
GBIC	Gigabit Interface Converter
GOA	Government of Alberta (GoA).
GPS	Global Positioning Satellite
GUI	Graphic User Interface
HDF	Hortonworks Data Flow
HDP	Hortonworks Data Platform
HTG	Heating Systems Monitoring and Control
HWx	Heating Water Systems Monitoring and Control where “x” = system numbers
IP	Internet Protocol
IPS	Images Per Second
LDAP	Lightweight Directory Access Protocol
LRT	Light Rail Transit
LTG	Lighting System Monitoring and Control.
MPEG	Moving Picture Experts Group part 4
MUx	Make-up air systems monitoring and control where “x” = system number
NAS	Network Video Recorder
NEXT	Near End Crosstalk (Loss)
NVR	Network Video Recorder

OAT	Outdoor Air Condition Monitoring.
OFR	On-Frequency Repeaters
OSE	Optical Splice Enclosure
OWS	Operator Work Station
POP	Proof of Payment
PCoIP	PC-over-IP
PIDS	Passenger Information Display System
POE	Power Over Ethernet
POP	Proof of Payment
POT	Portable Operator Terminal
PTZ	Pan, Tilt, Zoom Camera
PSU	Power Supply Unit
RADIUS	Remote Authentication Dial-In User Service
RRS	Radio Repeater System
SCA	SCADA System Alarm Monitoring.
SCADA	Supervisory Control and Data Acquisition
SEC	Security and Alarm Monitoring Systems
SRS	Signals Room Switch
TCO	Total Cost of Ownership
TGB	Terminal Ground Bus
TPSS	Traction Power Substation
TPPSS	Traction Power Sub Stations
RAK	Rack or Equipment Cabinet
RSV	Rail Smart Card Validator
RTU	SCADA RTU
SAN	Storage Area Network
SMK	Smoke Control Monitoring and Control
SMP	Sump Monitoring
SNW	Track Snow Blower Monitoring and Control
SPK	Speaker
SPT	Space Temperature Monitoring

TEL	Telephone
TVM	Ticket Vending Machine
TVV	Ticket Vending Validator
UPS	Uninterruptable Power Supply
UPSR	Unidirectional Path Switched Ring
VDA	Video Distribution Amplifier
VGW	Voice Gateway
VNC	Virtual Network Computing
VRF	Virtual Routing and Forwarding
WAP	Wireless Access Point
WBS	Wireless Base Station
WDM	Optical Wave Division Multiplexor
WSU	Wireless Subscriber Unit

8.2 CERTIFICATIONS

8.2.1 Railway Certifications

- EN 50121-4
- IEC 62236-4

8.2.2 Other Certifications

- MEF CE 2.0
- NEBS Level

8.2.3 Regulatory Compliance

- ETSI Standards
- ANSI Standards

8.2.4 Hazard Level Classification

8.2.5 Electrical Safety Compliance

- UL 609550-1 ed.2003

8.2.6 EMC Compliance

- FCC
- AS/NZS CISPR
- CISPR
- ICES

8.2.7 EMC Immunity

- EN 300 386
- IEC/EN 61000-4-3 Radiated Immunity

8.2.8 Environmental Compliance

- Telecordia GR-1089-CORE, Issue 6
- Telecordia GR-63-CORE, Issue 3

8.2.9 Safety Standards Compliance

- FDA CDRH 21-CFR
- UL/CSA 60950-22
- CSA-C22.2 No.94
- CAN/CSA-B72-M87
- UL50
- IEC/EN 60950-22
- IEC 60529
- cTUVus, CB

8.2.10 Telecom Interface Compliance

- ITU-T G.703

8.2.11 Electromagnetic Compatibility

- CE Mark
- EN
- ETS
- FCC
- VCCI Class A

8.3 INTRODUCTION

The LRT communications system is designed to link the Control Centre located at Churchill Station and related equipment facilities with LRT stations, traction power substations (TPSS) and LRT signaling facilities throughout the LRT system. These facilities are not manned. The system must have the capability for LRT staff to remotely monitor and control, when necessary, passengers, intruders and equipment that are in these facilities.

The primary communications system is comprised of a number of subsystems as follows:

8.3.1 Fares System

For greater detail on the Fare Equipment monitoring and control system (refer to Chapter 10 Station and Ancillary Facilities, Section 10.5). In this document please refer to Section 8.11.

8.3.2 Building Management System (BMS)

The BMS is equipment that is necessary for monitoring and controlling heating, ventilation and air conditioning (HVAC) equipment at LRT stations and TPSS's (refer to Section 8.12). The BMS is interconnected with the security system and receives (using dry contacts) notification from the security system if a security breach has occurred (refer to Section 8.12)

The BMS is the remote monitoring system that is responsible for remote monitoring and control of all remote I/O devices such as HVAC, wayside devices, escalators, elevators, generators, UPS, smoke fans, station lighting and any other device requiring connection via

contacts or analog signals. This system is used to give the control room operators a complete overview and picture of the status of all stations in the LRT system.

8.3.3 Supervisory Control and Data Acquisition (SCADA)

The status of protective relays, transformers, and circuit breakers in the TPSS is remotely monitored (for information only) by SCADA from the EPCOR Control Centre. This system is under the jurisdiction of EPCOR. It is discussed in Chapter 8, Traction Power Networks, Section 8.18.

8.3.4 Telephone Systems

Nortel CS-1000 telephone switches, dedicated for LRT staff use, are located at the ETS Control Centre (Churchill), Health Sciences Station, and Southgate Station. These switches provide telephone access and switching services for the control center staff to all staff phones along the LRT ROW, elevator access phones, service space phones, washroom access phones, and for Emergency Help phones (refer to Section 8.15).

This system is entirely made up of analog devices and a few digital phone sets in the control room. The vast majority of the system is used for public help phone calls from transit facilities back to the main control room. This is where all communications are recorded by central voice loggers. Calls placed from service phones used by ETS staff to the outside world are not recorded and make up the remaining use cases for the phone system.

ETS is in the process of transitioning this system to one that is capable of analog and VoIP. There are several reasons for this:

i. Ease of installation and deployment on new site installations. There will no longer be any need to run a separate copper cable as everything can be run on fibre and the network deployment at site.
ii. Migration to VoIP based help phones that can self-test to ensure functionality. This will help to eliminate weekly testing currently done by Security and outside contractors.
iii. Ability to easily add redundant links to the PSTN network.
iv. Better visibility into the operation of the main backend system and the ability to take addition of extensions in house as needed.
v. Simplification of management of the entire system from endpoint to backend.

8.3.5 Public Address (PA) and Variable Message Sign Systems (VMS)

The PA/VMS system is to provide the capability for the control center staff to make announcements to patrons in all LRT stations and interconnected to the PA system is the VMS, which displays visual messages at LRT station platforms (refer to Section 8.14).

8.3.6 Radio System

The Edmonton LRT System shares a radio system with the Edmonton Police Service and Edmonton Emergency Response Department. The system is a 4 site, GPS Simulcast EDACS trunked radio system employing 20 channels in the public safety band of the 800 MHz spectrum. Edmonton LRT utilizes 38 talk groups to meet LRT wireless communications requirements (refer to Section 8.16).

ETS is currently undergoing a project to migrate from EDACS to the provincial AFRRCS P25 based radio system. This will be a shared system with all first responders in the Edmonton area and will have a similar capability to the existing EDACS system. The major difference is that all backend maintenance of the system will be done by the Alberta Government and ETS's only responsibility will be to maintain the end user equipment in all vehicles and the control room.

8.3.7 Closed Circuit Television (CCTV)

The CCTV system allows operations personnel and Controllers to remotely monitor and record activities at all LRT stations and other designated locations (refer to Section 8.13). This system is used primarily for safety and security of patrons on the system but is also used for LRT operations in gaining an awareness of situations and status in all LRT facilities. This system has also become the central point for security alarms and security related functions and is relied upon by ETS on a 24/7 basis.

The Edmonton LRT System is equipped with a Closed Circuit Television (CCTV) surveillance system that assists in the management of train operations, public safety, and security. It is comprised of video imaging, processing, display, and recording equipment along with a fibre optic data transmission network.

The CCTV system continuously records activities occurring within the fields-of-view of all cameras located at LRT stations and other designated locations and allows operations personnel and Controllers to remotely live-monitor as well as review the recordings of the cameras. ETS has migrated the majority of the legacy analogue CCTV system to an updated Unified Security Platform (USP).

8.3.8 Signals Network

The Signals network consists of a ring of switches providing layer 2 connectivity to all of the GE Vital Logic Controllers (VLC). Communications is responsible for monitoring and maintaining this network. Section 8.17 provides the design guidelines for the Signals Network.

8.3.9 Other Subsystems

Several other major communications subsystems are required on Edmonton's LRT System. They are the Centralized Traffic Control (CTC) system for the control of the LRT Trains (refer to Chapter 7 Signals) and the Fare Equipment monitoring and control system (refer to Chapter 10 Station and Ancillary Facilities, Section 8.19).

The LRT communications systems use a combination of fibre optic and copper based cables for the various subsystems. Sections 8.8, 8.9 and 8.19 provide the design guidelines for cabling and the cable transmission system.

8.4 APPLICABLE CODES, STANDARDS, REGULATIONS, PRACTICES

All design work, equipment and material selection must conform to or exceed the latest editions of the codes and standards issued by:

- Alberta Occupational Health and Safety (OH&S) Act
- Alberta Chemical Hazards Regulations
- Alberta General Safety Regulations
- Guidelines for Non-ionizing Radiation IRPA/INIRC
- Guidelines on Office Ergonomics CSA-Z412
- Indoor Air Quality ASHRAE 55-1992
- Industrial Lighting ANSI/IES-RP-7-1991
- Ventilation for Acceptable Indoor Air Quality ASHRAE 62-1989

8.5 DESIGN REFERENCE DOCUMENTS

Additional documentation that may be relevant to the design of the communication system components are listed below. They are on file at the D.L. MacDonald Maintenance Facility and available to the Consultant upon request. If differences between this guideline and the reference documents listed below occur, then the most recent reference document must be the Consultant's basis for design.

8.5.1 General

- General Guidelines for the Design of Light Rail Transit Facilities in Edmonton - 2009
- LRT Design Guidelines For ETS Edmonton Transit System – Final Issue July 2011
- Naming Conventions Best Common Practice, Issue 1.0", dated January 2016
- Solution Integration and Deployment Report Version 5.2 - March 1, 2011

8.5.2 BMS

- LRT Network Overview Schematic.

8.5.3 Public Address System

- U of A Station Upgrade PA and Acoustics Report – September 2000

8.5.4 Radio System

- GPS Simulcast Upgrade, City of Edmonton – Tyco Electronics June 2008
- Andrews Radiax Antenna Design Reference

8.5.5 CCTV

- APTA IT-RP-001-08 V1.3 - Technical Recommended Practice for: The selection of Cameras, Digital Recording Systems, Digital High Speed Train-lines and Networks for use in Transit related CCTV systems – American Public Transportation Association 2007

8.5.6 Security System

- ETS has implemented the Tyco C-Cure 800/8000 or 9000 Security and event management solution. System support documents can be found at http://www.swhouse.com/
- The Security System is maintained by the City Of Edmonton Public Works group and their standards and documentation for installation must be referenced.

8.5.7 Other LRT Control Systems

- There are several other major control systems on Edmonton's LRT system. They are discussed in other chapters of the LRT Design Guidelines and are listed below with the reference to the corresponding chapter and Section:
    - Central Traffic Control (CTC) – Chapter 7 Signals, Section 7.5.9.
    - Supervisory Control and Data Acquisition (SCADA) – Chapter 6 Traction Power, Section 6.2.
    - Central Data Collection and Information System (CDCIS) for Fare Collection Equipment - Chapter 10 Stations and Ancillary Facilities, Section 10.5.4.
    - (NextFare) – Chapter 10 Stations and Ancillary Facilities, Section 10.5.4.

8.5.8 General Design Objectives and Requirements

8.5.8.1 Common Fundamental Design Goals and Objectives

The following provides a summary of the fundamental design objectives which were arrived at from LRT project post mortem discussions and technical reviews with key personnel and project disciplines.

8.5.8.1.1 General:

i. The design objective is to minimize the number of components utilized in the communication systems.
ii. All systems must be designed with integration in mind. Physical segregation of common system equipment in all communication rooms is to be avoided.
iii. All operator functions must be capable of being installed and utilized on shared operator workstations in control. Individual workstations for various programs are to be avoided.
iv. A critical component of any communications system is the ability to centrally monitor and assure that the system is operating as designed. Any solution installed in the ETS environment must have a monitoring and assurance solution incorporated as part of the main system design.
v. All new systems must include a Design Services Document (DSD) to describe how the system functions within the ETS system.
vi. Consistency from one site to another must be applied. The organization and layout of most types of communications facilities is well established and must be followed in deployment of new sites.
vii. The Total Cost of Ownership (TCO) must be considered will all solutions to be deployed. The driving factor in selecting any solution must not be the one time up front cost. Keeping maintenance costs to a minimum must be the priority when deciding on any solution.
viii. Any interconnections between systems will preferably be driven by software connections as opposed to hardware interconnects. If software is to be used, there must be a supportable model to ensure the links will not be broken when either system on each side of the link is upgraded.
ix. Redundancy is an important consideration for every point in the system: power, cooling, network connections and local hardware.

8.5.8.1.2 IT Rooms

i. Standardization of equipment cabinets in each communication room is required to ensure cabinets and their layouts are the same from one Communications room to another.
ii. When multiple cabinets must be used in a location, consideration must be given to a central patching bay for connections of devices between cabinets. The goal is to ensure that only standard length (6 or 10 foot) patch cords are needed to plug anything in at any location and these cables do not need to be in overhead cable trays. The goal is to install once and not touch again. Appropriate future capacity needs to be planned in to ensure this goal will be realized for the longer term.
iii. Each room must be constructed with the nature of the equipment being housed in it under consideration. Ensuring that all communications rooms have vapor barriers to keep humid air in, all floors and ceiling tiles are dust free and proper cooling solutions in place are the basic considerations for any communications facility.

8.5.8.1.3 Equipment, Devices and Components

i. All equipment must be remotely manageable both in band and out of band. This means IP interfaces must exist on all equipment related to the communication system from the UPS to the individual devices and also include the ability to carry out remote power cycling of all devices.
ii. All servers are to be centrally located in the two main datacenters at USR and DLM. ETS is in the process of introducing a third data center at City Hall. Any servers that are required will be located in cooperation with ETS and must be approved by ETS prior to install.
iii. Any new devices that are currently not used by ETS and are being proposed as part of a project must be reviewed by ETS and an accompanying Best Common Practice (BCP) document must be created and submitted to ETS.

iv. All components in the communications rooms must be capable of being 19 inch rack mounted and capable of being densely installed. Individual units that each have their own power supply (such as media converters that do not share a power supply for multiple runs) are not acceptable. Only chassis based solutions with redundant power supplies are to be used.

8.5.8.1.4 Powering

i. All communications equipment must be UPS fed and, where possible, generator fed. Any exceptions will be noted in each individual section in these guidelines. This includes all endpoints as well as headend equipment and satellite wiring closets.
ii. Power and data to be carried on the same cable where possible to allow for centralized management of all end devices down to the power level. Ideally, all end devices should be able to be remotely power cycled. This arrangement will also allow for centralized power from a UPS generator source. PoE is to be used for device locations within 90 m of a central switch and powered fibre solutions should be considered for any device beyond 90 m and closer than 3 km.
iii. The goal for UPS power must be to power everything from one central UPS per station. Individual satellite units for smaller cabinets must be avoided as much as possible. Any exceptions must be reviewed by ETS prior to installation.

8.5.8.1.5 Cabling

i. All structured cabling installations must follow BICSI standards and Cat 6 cable runs in excess of 90m will be deemed unacceptable.
ii. ETS uses a cable connection and rack layout documentation system called Patch Manager. All as-built documentation must be added to this system as part of any project that requires changes to the cabling system or adds new equipment in communications cabinets.
iii. All patch cables must be separated into copper and fibre and kept separate within communications cabinets and cable management raceways. Copper is kept to the left side and fibre is kept to the right side. All power connections are to be organized in the rear of the cabinet.
iv. All indoor backbone fibre splicing is to be done in a wall mounted splice enclosure with factory pre terminated pigtails. All outdoor FOSC fibre splicing must be completed using fusion splicing methods. Spurs and other intra facility runs can be done the same way and alternative methods such as rack mounted splice cassettes will also be considered. All methods for fibre installation proposed by the contractor must be approved by ETS prior to installation.
v. The majority of sites utilizing a lower number of fibre strands must use SC-APC type fibre connectors. Any high density locations such as multiple fibre backbone meet-me locations, datacenters and control rooms must use LC-APC connectors. The connector types used at any site for any project must be approved by ETS prior to installation.

8.5.8.1.6 Wireless Solutions

i. Wireless solutions can be used but must be considered carefully. If the project is Greenfield, there is little to no reason to use wireless when wired can be used. The preferred approach to wireless is to set up wireless “pods” with a central radio connected to a managed switch providing service to devices within a 90 m radius of the central cabinet. UPS power must be supplied at the cabinet. The use of Individual radios on multiple poles for transmission back to a central base station is not acceptable.

8.5.8.1.7 Software Systems

i. Single sign-on must be used wherever possible for applications and end device access. LDAP, AD and RADIUS are the currently accepted methods to accomplish this.

ii. Central management software suites should exist for all end devices to be installed. For example, ETS utilizes many AXIS products from cameras to encoders and all of these devices can be centrally managed by the Axis Management System.
iii. All workstations are to be centrally located either in the control room datacenter or the main ETS datacenters. The currently accepted technology to utilize central workstations is PCoIP. Other methods can be considered but will need prior approval by ETS before being installed.
iv. Centralized Monitoring solutions should exist for all key system operational performance indicators such as CPU, memory, bandwidth, hardware status, application status, log file analysis, power utilization from the local device and other points such as the generators, electrical distribution panels and UPS must be included. HVAC utilization as well as temperature and humidity of all communications facilities must also be included.

8.5.8.2 General Design Requirements

The following are the general requirements that must be taken into consideration for each of the communications subsystems:

i. The existing LRT communications system is comprised of a variety of different technologies and equipment. When possible, equipment at new stations should be the same as what is currently being used. If certain equipment is no longer available, provide an acceptable alternative that can be used with the current system or plan on replacing all obsolete and incompatible equipment to accommodate the new equipment.
ii. Investigate preferences or plans in place (to be confirmed with ETS operations personnel) that will impact selection of equipment. Meetings between the Designer and stakeholders must be conducted at the earliest stage of design to clarify the proposed work and systems being offered. The final design must be consensus based and inclusive of planning, changes and upgrades that are concurrent to LRT operations.
iii. Where possible, systems should be specified that are capable of being maintained, repaired, modified, and updated by City of Edmonton staff, or by one of a number of local qualified contractors. It is not desirable to be limited to one source for maintenance, repair, and upgrading.
iv. Much of the new communication equipment currently being manufactured is microprocessor based technology. Uninterruptible power supplies (UPS) are required for this equipment to prevent loss of data, or problems associated with the restarting of the devices.
v. Where possible, specifications should be based on open standards for interoperability. Specifications should include bid evaluation criteria that comply with this requirement. The use of environmentally hardened* electronic equipment will address some of the environmental factors presented in the section below. The use of this class of equipment is encouraged.

***Note:** Environmental hardening generally refers to enhancements that are made to electronics in order that they can withstand the “elements”. Enhancements can include water-tight, water-proof; dust-tight or dust-proof; rugged enclosure or housing, increased allowable operating temperature range, RFI shielding effectiveness, etc.

8.5.8.3 Environmental Factors

There are a number of location and environmental factors which must be taken into consideration as follows:

i. Temperature sensitive equipment can be problematic when installed in unheated or uncontrolled locations.
ii. Poor air quality (high in dust particles) can affect newer electronic and computer equipment.
iii. Electromagnetic interference (from LRT catenary, and LRV’s) can affect electronic/computer equipment.

iv. Arrival/departures of trains at surface stations or noise from activities from adjacent developments/land-uses can create high ambient noise levels.
v. Way radios used by LRT staff have the potential for affecting sensitive electronic equipment.
vi. Lighting levels vary dramatically dependent on the type of station (underground or surface) and the time of day.
vii. Water leakage and high humidity levels in underground stations and in tunnels can be problematic.

Refer to Chapter 1 General, Section 1.3 for local climatic conditions.

8.6 COMMUNICATION EQUIPMENT ENVIRONMENT

8.6.1 Introduction and Overview

ETS currently maintains three datacenters. Two are used for all production systems related to LRT operations and one is used for all workstations and support equipment required by the central control room. The two production datacenters are geographically separated by about 12 km of fibre optics. One is located above ground while the other is located below ground. These two sites are operated in an active-active fashion and both are used 24/7 to keep the ETS communications subsystems related to LRT operating. The exact failover mechanism depends on each individual system and is usually left up to the application to facilitate failover recovery.

There are some underlying systems that are used to allow for disaster recovery between the two sites over and above the application redundancy. These systems are built on VMware and SAN technology and ensure appropriate reliability for all systems operating in the ETS datacenters.

In addition to the datacenters, ETS has 19 LRT communications rooms plus a multitude of wiring closets and distribution points that make up the entire communication equipment environment.

8.6.2 Control Centers

8.6.2.1 ETS Control Center

The LRT Control Center is located at the north end of the concourse level of the Churchill LRT Station and has been located there since LRT operations began in the late 1970's. A recent project to renovate the control room was completed and LRT now occupies the entire space of the original control room. Bus Operations and Security were moved from that location to their current location in the middle of Churchill LRT station. There are now two rooms that house all of the ETS control and dispatch operations personnel.

As part of this project, functions were consolidated onto single workstations but some systems, due to their critical nature or difficulty in consolidating were left as is. This has greatly reduced the number of monitors, keyboards and mice required. Going forward, all new applications should be designed to exist within a unified control room environment. Adding additional new workstations to the current environment in control rooms should be avoided and will require ETS approval.

Migration to a new location in the event of an emergency in Churchill station has never been well defined. Moving forward, ETS is considering the use of various PCoIP solutions to locate all workstations in the central datacenters and provide flexibility to migrate control room functions to offsite locations that have dedicated access to the ETS network. This will allow for rapid relocation and will provide relocated operators with the same access to all systems as is done in the Churchill location.

8.6.2.2 Control Center Facility Design Requirements

8.6.2.2.1 Functions

The control facility must be designed to align and accommodate the following functions:

- LRT Operations
- Security
- Bus Operations

8.6.2.2.2 Location and Sizing

Ideally, the control room should be located as close as possible to the LRT corridor, preferably next to an LRT station. This will allow for easy access to the line in the event of major issues and will also allow for simplified connectivity to the LRT backbone fibre optic system.

Other location considerations are:

- Provision of adequate staff and visitor parking
- Ready access to basic existing utility infrastructure such as water and sewer
- Access to telephone and fibre optic cables (owned or leased)

The operating area design within the Control Centre must include the following:

- A private office for the Coordinator located away from the room access doorway so that the Controllers do not have to walk past the office.
- Specific un-walled or open areas for each functional group (LRT, Security, and Bus Operations). Audible communication capability between each group is essential during incident management situations.

The minimum size for a new facility, excluding the ancillary requirements that are listed below, is approximately 325 m^2. This figure assumes that the current Control Centre staffing levels and equipment configuration requirements do not increase.

8.6.2.2.3 Ancillary Requirements

- A separate Contractor waiting area (approximately 25 m^2) must be provided. Prior to starting any work on the LRT system, contractors must report to the Control Centre to receive the required site access authorization and permits.
- Staff lunch room (approximately 35 m^2).
- Male and female locker rooms (approximately 75 m^2 in total).
- Combined Washroom (approximately 25 m^2).
- ‘Break’ or ‘quiet’ room (approximately 20 m^2).
- Electronic access control features are required on all doors.
- CCTV coverage of all doors is required.
- Generator and UPS back-up power is required.
- Staff and visitor parking.

All of the functional and spatial requirements would be verified through the space planning process associated with the design and construction of an office-type facility.

8.6.2.2.4 Environmental Requirements

Due to the nature of 24/7 operations and the sophisticated electronic equipment it houses, environmental considerations and requirements are a critical factor in the design of the control center facility. In general, the following design parameters should be taken into consideration:

- A need for continuous fresh air supply.
- A requirement for stringent humidity control.
- Provision of natural light.

- Avoid the zone of electromagnetic interference caused by the overhead catenary power system.
- Computer flooring may be required. Alternative arrangements such as overhead racking should be investigated.
- Anti-static floor tiles are to be used where desks and chairs are located. Carpet is suitable for the other areas (to assist in noise reduction).
- Cable tray or raceways should be placed under the flooring to manage the large number of interconnection cables that are required.
- Task lighting, with dimming capability as required.
- Area lighting, with dimming capability as required.
- A relatively low ambient light level is necessary, to control glare from computer monitors.
- Light levels should be adjustable to higher levels when maintenance is required in the room.
- Traditional ballast fluorescent lighting is not recommended.
- Lighting levels to be in accordance with ETS accepted standards.
- Noise attenuation measures are required both on the walls and ceilings in order to reduce the noise levels generated from: staff conversations, telephone and radio conversations, ringing phones etc.
- Air conditioning is required. Vents should be placed in locations that do not blow directly on staff. The air conditioning equipment must be capable of keeping the facility cool and comfortable 24 hours a day notwithstanding the large amount of electronic equipment in service. Additional cooling for any equipment hot spots is to be considered separately.
- Alberta code fire protection is required. A pre-action sprinkler system is acceptable.

8.6.2.2.5 Electronic and Software Requirements

There is an extensive array of electronic and computer equipment manufactured and supplied by a variety of firms located in the ETS Control Centre.

Prior to commencing detailed design, the accuracy of the following information should be confirmed with the ETS LRT Electrical Systems section.

- Meridian 1 telephone handsets or current equivalent: Supplier Telus Communications, Edmonton
- Programming of telephones: Telus Communications, Edmonton
- CCTV equipment, including monitors, keyboards, recording equipment: Chermik Group Inc. Edmonton and Convergint Technologies, Edmonton.
- CTC equipment, including workstations, software, and display panel systems: Thales Rail Systems.
- BMS equipment, including workstations, software, and printers: ESC Automation, Edmonton
- City of Edmonton corporate network workstations, including software and printers: City of Edmonton IT Branch
- Radio system workstations, including software and printers: Harris
- SCADA workstations, including software and printers: EPCOR, Edmonton
- Fare equipment workstations, including software and printers: CUBIC, San Diego, California
- Key Systems Inc. – New York (Best Access Calgary is the closest local representative)

Due to the complex nature of, and the importance of certain systems, such as the CTC system and the fare equipment system, LRT staff may direct and manage the purchase of the equipment and software. Close consultation with the LRT staff is required early in the design stage to ensure alignment so that the expected outcomes are achieved.

8.6.3 Data Centers

As described in the introduction of this section, ETS operates two main data centers. One is located at DLM and the other is at University LRT station. These datacenters must adhere to BICSI and ANSI/TIA datacenter standards (ANSI/TIA-942-A (2012), ANSI/BICSI 002-2011). Industry best practices also apply and will be expected. The following categories of datacenter design must be followed in designing any datacenter facility:

8.6.3.1 Power Distribution

Power considerations for datacenters are as follows:

i. All power in datacenters must be 208V, 3 phase distributed to each cabinet.
ii. The use of distribution bus bars is preferred. The goal of this type of system would be to ensure the room is cabled once and flexible enough to meet future needs. The only consideration would be to ensure that the bars are sized for the appropriate current draw based on the current cabinet loads and future loads. The bus bar system considered would be similar to the Starline busway system. This would allow for the changing of any PDUs and other power outlets to each cabinet without electrical re-cabling.
iii. All cabinets must have at least 2 IP capable PDUs that are vertically mounted in a "ZeroU" configuration and can be remotely controlled and monitored. These PDUs can be either single phase or three phase but must have at least 20 C13 outlets and be rated to 30 Amps. In cases where dedicated power intensive equipment is to be installed, 19 inch rack mount PDUs may be installed for the sole use of that equipment if required. Otherwise, a second set of vertical PDUs may be installed to accommodate the power requirements. The current ETS standard is APC but other manufacturers can be considered in consultation with ETS.
iv. Power expandability must be a main consideration. All components in the system must be sized for the current load but have the ability to be easily expanded to accommodate future loading.

8.6.3.2 UPS/Generator

i. A minimum redundancy level of N+1 for the UPS must be provided. However, two physical UPS units would be a better alternative and fed from redundant distribution systems.
ii. The UPS is used as a method to ensure that the drop in voltage that occurs when the generator takes over does not cause the equipment to restart. As such, the UPS needs to be sized to accommodate the load but only a short run time such as 2 hours.
iii. The UPS needs to be flexible enough to be able to accommodate future growth such as having a large frame size but starting with a smaller UPS electronics unit. The system needs to be able to be expanded in capacity by adding additional units as the datacenter requirements warrant.
iv. The generator must be sized to accommodate the entire load of the datacenter plus some additional future capacity.
v. Both the generator and UPS must be able to be remotely monitored on the IP network.

8.6.3.3 Cooling

i. All cooling methods must follow industry standard hot aisle/cold aisle in-row cooling methodologies.
ii. Either redundant HVAC units (a minimum of 2) need to be provisioned or multiple in-row units can be provisioned in order to ensure cooling availability in the event of equipment malfunction or maintenance of a unit.
iii. All blank areas of the cold side of a cabinet are to have blanking panels. Rear mounted switches may need special ductwork to allow for the flow of cold air to the intakes.
iv. Cooling of the room must be designed in such a way as to cool the equipment and not the room.

v. Cooling needs to be designed in a flexible manner as the UPS described above. It must be able to be expanded as the heating loads in the room increase with the installation of new equipment.
vi. The cooling system must also bet capable of increasing the humidity in the room to acceptable levels.

8.6.3.4 Structured Cabling

i. All fibre terminations must be single mode and use LC patch panels.
ii. All fibre must go to a dedicated two post rack at the end of each row for interconnections.
iii. Each server cabinet will have a minimum of a 24 strand fibre run from it to the fibre termination rack and have a top of cabinet patch panel.
iv. Each network cabinet will have a minimum of a 144 strand fibre run from it to the fibre termination rack.
v. All copper connections must go to a dedicated two post rack at the end of each row for interconnections. This rack is independent and is located adjacent to the fibre termination cabinet.
vi. Each server cabinet will have a minimum of 24 copper connections from the cabinet to the interconnection rack.
vii. Each network cabinet will have a minimum of 96 copper connections from the cabinet to the interconnection rack.
viii. High density 48 port in one rack unit patch panels are to be used for all copper jacks in the interconnection rack and the network cabinets.
ix. Overhead basket tray or cabinet integrated tray systems may be used to get cables to and from the cabinets. Fibre and copper cables shall be run is separate dedicated overhead raceways.
x. The goal would be to use multi-stranded fibres as much as possible to minimize the number of cables in the tray. As well, consideration should be given to factory made cabling bundles for easy plug and play installation of both copper and fibre.
xi. Overall, the goal is to cable once and minimize future adds. All cables should be installed as cleanly as possible to allow for easier troubleshooting and maintenance.
xii. All cables are to be labeled according to ETS labeling standards and align with ANSI/TIA-606-B standards.

8.6.3.4.1 Cabinets

i. All cabinets must be extra deep and extra wide (800 mm Wide X 1200 mm Deep). The currently used standard is Panduit server cabinets for servers and network cabinets for network equipment.
ii. The height can vary depending on the space but they must be a minimum of 42 RU high.
iii. Server Cabinets must have front blanking panels to cover the vertical space caused by the cabinet being wider and cable management fingers on the rear two posts.
iv. Network cabinets must have cable management fingers on all four posts and the front rails be pushed back to accommodate the network connections on the front of network equipment.
v. All network cabinets must have slack spools in the cable management area to allow for management of cable slack.
vi. All cabinets must come with PDU brackets to accommodate 4 PDUs (two per side in the rear).
vii. Chimneys are acceptable for hot aisle containment if the room can accommodate the extra height.
viii. Card access on each cabinet should also be considered with input from ETS.
ix. All cabinets need to be securely fastened to the floor.
x. All cabinets need to be grounded to a central busbar according to ANSI/TIA 607B.
xi. Each cabinet should contain a busbar to ground each piece of equipment.
xii. Double lug ground bars must be used for all grounding.

xiii. Cabinets can be black or white but they must all be of the same color. Coordinate with ETS.
xiv. Cabinets should all match dimensions to create a uniform look of all cabinets. Mixing and matching various sized cabinets must be avoided. This could also interfere with the In-Row cooling strategy.

8.6.3.4.2 Flooring/Structure

i. Raised flooring should generally be avoided if the space is brand new and does not already have a raised floor. If a raised floor exists, it should only be used to distribute cold air. Cabling in the underfloor space should be avoided if possible.
ii. All flooring should have antistatic tiles that are grounded to the central busbar.
iii. Dust needs to be kept to an absolute minimum. Sticky flooring pads need to be positioned at each entrance for dirt control of people walking into the room.
iv. All walls, ceilings and floors must include proper vapour barriers to keep humidity in the room at optimal levels so as not to overtax the humidity generating equipment.

8.6.3.4.3 Fire Suppression Methods

i. Due to the sensitive nature of the equipment in the datacenter, any fire suppression method must allow for the extinguishing of fires without the use of water. The goal is to extinguish the flame and keep the equipment running.

8.6.4 Communication Rooms

Communication rooms are the locations at each transit facility that house the distribution and access equipment for all end devices feeding the servers in the main datacenters. The following should be taken into consideration in the design of the related communications rooms:

i. They must be able to accommodate fibre optic and copper patch panels, network distribution equipment, amplifiers, and other equipment used for the communications system with room for expansion.
ii. UPS systems should be located outside of these locations whenever possible.
iii. All power in the rooms must be fed from generator backup up UPS power sources and all UPS units must be at least N+1 redundant.
iv. Overhead basket tray needs to installed to accommodate cable runs to the cabinets.
v. Contact closure inputs need to be installed in wall mounted boxes and fed into alarm units or I/O devices within those boxes.
vi. The provision of heating, ventilation and air quality controls. Humidity can be difficult to maintain given the dry environment in Edmonton. Vapor Barriers should be considered to keep the humid air inside the communications room as much as possible.
vii. New communication and control systems are computerized. Dust can be a major problem for computers. Dust can affect drives, CPU and heat-sink fans. Overheating will result if dust builds up on circuit boards. Because of these issues, the room must be designed to eliminate all sources of dust such as unsealed concrete flooring or dusty ceiling tiles.
viii. Temperature must be controlled. Electronic and computer equipment cannot tolerate outdoor minimum and maximum temperatures.
ix. All power distribution must be single phase 20 A 208 V with a provision for 20 A 120 V circuits for any loads that require 120 V such as audio amplifiers.
x. All cabinets must have at least two IP capable PDUs, as described in the PDU section, for power distribution inside all cabinets. Each PDU will have its own dedicated circuit fed from generator backup up UPS circuits.
xi. All cabinets must be extra deep and extra wide (800 mm Wide X 1200 mm Deep) and be network style cabinets with cable management on all four posts.

xii. All cabinets must include card access on all locks if critical location, all locks shall be keyed alike utilizing a master key system.
xiii. All communications rooms must include a contractor shelf that is to be used to put contractor laptops on. This shelf shall be folded on the wall to maximize space. Above the shelf, four Cat 6 jacks need to be installed that run to the main communications cabinet for maintenance needs without having to open the cabinet door.
xiv. All cabling (fibre and copper) needs to be installed to the main communications cabinet and any other cabinets must have at least 48 ports of copper connections to the main communications cabinet.

8.6.4.1 Main Communications Room

All main communications rooms shall be a minimum of 42 m^2. Room configuration other than square or rectangular are acceptable as long as same square meter size as indicated is maintained. In these configurations, the room must be designed to accommodate the required number of 4 post, server depth racks and allow access from all four sides of the rack. This means a minimum of 1 m from all sides of the rack. When multiple racks are deployed, they may be bolted together. Anti-Static mats must be deployed on at least the front and rear sides of the cabinet extending out a minimum of 0.75 m from the cabinet edge.

The ceiling must be a minimum height of 4.0 m in order to accommodate a full 45 RU rack and cable tray with waterfalls into each rack. Main Communications Rooms are preferred to be located on the station itself, either on the platform or in the basement.

A minimum of two cabinets must be installed in each main communications room. One is for the communications equipment and the second is for power distribution of a powered fibre solution.

As powered fibre solutions start to become more mainstream, the likelihood of needing any other locations for distribution equipment will decrease. This means that wiring closets and secondary communications rooms will not be needed. The only thing that may end up being installed in these locations is a wall mount junction box containing the power distribution blocks and the fibre splice points as a means of device aggregation.

8.6.4.2 TPSS Communications Rooms

When the Main Communications Room is located in a TPSS, provision must still be made for a smaller communications room that can accommodate one 4 post cabinet 800 mm x 1200 mm. There must be access from all 4 sides. This location will be used to terminate all structured cabling to all end devices in the station itself.

When the main communications room is in the station, provision must be made for a small communications room in all TPSS structures to terminate fibre and structured cabling requirements for SCADA, transfer trip, CTC, BMS, and CCTV. This space must be able to hold a full height, 4 post, 800 mm x 1200 mm cabinet with access from all 4 sides. Anti-Static mats must be deployed on at least the front and rear sides of the cabinet extending out a minimum of 0.75 m from the cabinet edge. his rack can be collocated in the electrical room as long as the required criteria, as outlined in this paragraph, have been met.

8.6.4.3 Transit Center Communications Rooms

When a transit center is part of the overall LRT station design, provision must be made for a small communications room in the transit center itself that will be used to terminate any end devices. This space will be able to accommodate a full height 4 post cabinet at least 800 mm x 1200 mm with access to all 4 sides. Anti-Static mats must be deployed on at least the front and rear sides of the cabinet extending out a minimum of 0.75 m from the cabinet edge.

8.6.4.4 Distribution Points

When end devices are installed too far from any communications room for Cat 5e or Cat 6 cable, a distribution point may be used to extend the network coverage area. These may be traffic signal boxes for outdoor installations, junction boxes for installation inside tunnels or other locations inside the station. No minimum size is specified here as junction boxes can be sized to accommodate whatever equipment needs to be housed.

8.6.5 Wiring Closets

Depending on the location of the communications rooms, it may be necessary to include auxiliary wiring closets to connect a large number of devices at a second satellite location. An example of this may be the situation where a communications rooms is located at the far end of a station platform and only about half of the devices are within the 90 m radius of that location. In order to capture the remaining devices, a wiring closet may be setup at that opposite end of the platform. The following considerations must be made when building a wiring closet:

i. A wall mount cabinet is acceptable but must be at least 11 RU high with vertical cable management on both sides of the cabinet. ETS currently uses CableTalk cabinets for this purpose.
ii. UPS power must be fed to the location from a central source. Additional UPS units in the cabinet are not acceptable.
iii. The location is not to be used as a main distribution point with network equipment. If the number of devices becomes excessive, another communications room should be planned for the location with a full height cabinet.
iv. Power should be 208 V 20 A. A single circuit is acceptable and power must be distributed with an IP capable PDU. This PDU will be a horizontal rack mount unit.
v. The Main feeder cable to this location can be either copper or fibre, depending on the distance. If copper, then the PDU control interface must be connected to the main communications room switch for remote power cycling control.
vi. The location should have some temperature control. Air changes may be acceptable if the temperature can be maintained within the operating parameters of the equipment to be installed.
vii. The enclosure should be locked with ETS standard ABUS locks.
viii. Temperature monitoring should be available at the location.

8.6.6 HVAC General

Every main communications room and datacenter must have provision for cooling and heating to maintain operating temperatures and humidity in the Edmonton ambient environment on a year round basis. Considerations for HVAC are as follows:

i. Redundancy and expandability are required.
ii. The HVAC is used to cool (or heat) equipment as needed not the room.
iii. All HVAC equipment must be connected to the main BMS/SCADA system as well as provide a network management controller that can be connected to the ETS OSS network for central control and monitoring.

8.6.7 Powering and UPS

Providing power and UPS to the communications rooms must be designed with the following in mind:

i. All power distribution is to be 208 V 20 Amp circuits within all communications facilities. These circuits will come off of 3 phase output panels from the station UPS.

ii. Provision may need to be made for 120 V AC input on audio amplifiers. Verification of the acceptable input voltages of the equipment being installed needs to be made prior to designing the power distribution.
iii. Every cabinet must have 2 redundant circuits distributed within the cabinet by an IP capable PDU. This must have the ability to be able to be remotely shut down individual outlets as needed. Wiring closets will only have one circuit.
iv. The UPS must be centralized for the station and all communications locations must have UPS fed circuits.
v. The UPS must be used to bridge that gap between when the utility power goes away and the generator power comes online.
vi. All power components feeding the communications equipment must be connected to the OSS network for remote monitoring and limited control functions. This includes the Main distribution meter, generator, UPS and PDUs. Network drops are to be provided to each of these devices for connection to the OSS network. As some of these devices are in electrical rooms, consideration should be given to using a hardened industrial access switch in the room and optical isolating its uplink to the main communications room via fibre.

8.6.8 Overall Workmanship

All equipment shall be installed in a neat and workmanlike manner. All methods of construction that are not specifically described in this guideline or indicated in the individual system specifications shall be subject to the control and approval of ETS.

All materials and work, including but not limited to: equipment cabling, pathways, support structures, wiring, equipment, installation, workmanship, maintenance and testing shall comply with the latest editions of the Canadian Electrical Code, Canadian Electrical Safety Code, the following list of codes and standards, and all applicable government, province and local rules and regulations, equipment manufacturer's instructions, and the Canadian Electrical Contractors Association (CECA) Standard of Installation. Conform with Provincial and Local Codes. In case of discrepancy or misalignment between the documents noted above, the contractor shall satisfy the most stringent requirements. Refer to Appendix H for a detailed list of applicable regulatory and industry Codes and Standards.

8.7 COMMON INFRASTRUCTURE ENVIRONMENT

8.7.1 Introduction and Overview

ETS is moving towards a three pillar foundation design that will allow for greater visibility, maintainability, and standardization of its communications infrastructure. The three pillars are as follows:

i. Network: ETS is migrating to an MPLS based services architecture that will allow for multitenancy on the core network and deliver the strict network requirements demanded by train control, SCADA, CCTV and other services. This will form the backbone for the entire system and will be centrally monitored and controlled.
ii. Compute: ETS is migrating to a common compute platform that will be standard across the board and be able to offer Virtual machines or bare metal servers to any application that needs compute servers. This infrastructure will also be centrally monitored and controlled with provision for full failover and disaster recovery.
iii. Storage: The entire compute platform with be migrating to a central managed SAN solution that allows for boot from SAN and all storage necessary to run the applications. This will be centrally monitored and controlled and have the ability to backup all data.

The foundation built with these three pillars is to be designed with a carrier grade mindset that provides greater than 99.999% reliability and can be fully maintained with little to no downtime of any service. ETS is operating on a 24/7 basis and the systems must stay operational at all

times. Going forward, once this infrastructure is in place, vendors will no longer be able to provide anything from these three categories in their solutions. They must run their applications on the ETS provided infrastructure and work closely with ETS to ensure that their needs are met.

8.7.2 Communications Common Infrastructure

The infrastructure that supports communications is generally comprised of four basic building categories: Data Centers and Communications Rooms, Wayside Facilities, Station Facilities, and Co-located Equipment Rooms. Refer to Appendix D for the Communications Infrastructure Components diagram.

8.7.3 Communication Room Common Infrastructure

Typical equipment and devices that are located in the Communication Room are shown in Appendix E, Typical Communications Room Layout.

8.7.4 Network Architecture

The following sections outline the various technologies and network architecture for the transport of communication signals to from the key Communication rooms, Wayside facilities, Station facilities, Control Rooms and Data Centres throughout the City of Edmonton LRT footprint.

As the newer MPLS based architecture is not in place today, the current architecture based on Cisco using VLANs and VRFs will be described in this section.

8.7.5 Fibre Optic Cable System

All communications applications will utilize fully redundant central core ring backbone fibre optic cable to transmit all data. Each system shares the network resources on this backbone rather than utilizing individual fibre strands for each subsystem.

The following guidelines should be used in future designs of the main fibre backbone:

i. The main fibre backbone cable is a 144 strand single mode fibre optic cable.
ii. All termination of the cable within a station must be made in a wall mount Optical Splice Enclosure (OSE).
iii. For the Communications room, all entries into a station must be done with a 72 strand spur cable that splices the first 24 strands in each direction inside a Fibre Optic Splice Closure (FOSC) in the nearest cable vault. The remaining 24 will remain dark for future use.
iv. For the Signals room, if applicable at the location, a 48 strand fibre will be brought into the signals room from the same FOSC as the communications room 72 strand. This will be spliced onto 12 strands in each direction from buffer tube 11 (strands 121-132).
v. For the TPSS room, if applicable at the location, a 48 strand fibre will be brought into the SCADA cabinet, in the room, from the same FOSC as the communications room 72 strand. This will be spliced onto 12 strands in each direction from buffer tube 12 (strands 133-144).
vi. Terminus stations must have the first 24 strands as well as buffer tube 8 spliced into the station for the communications room.
vii. The fibre optic cables must be installed inside of sub-ducts which in turn are installed in a 103 mm conduit or carrier duct.
viii. A maximum of three 32 mm sub-ducts will be installed within one 103 mm conduit. The unused sub-duct is for future expansion of the fibre optic system. Sub-ducts must be Maxcell sub-ducting system or approved equivalent.
ix. All fibre design is subject to change and will require verification with ETS on the current design philosophies.

Note: Confirmation is required that the cables are sized in accordance with the latest known requirements of ETS. In addition, any ducting that requires sub-ducts requires a minimum of two sets of Maxcell within one 103 mm conduit.

Auxiliary fibre cables used to interconnect other locations within the station footprint and adjacent structures must follow these guidelines:

i. All auxiliary fibres are to be a minimum of 24 strands.
ii. All auxiliary fibres are to be single-mode.
iii. Auxiliary fibres can utilize the OSE or cassette style installation.
iv. At a minimum these auxiliary fibre would connect the communications room to the platform or TPSS (depending on the communication room location) and any transit center location co-located with the LRT station.

The buffer tube assignments for all fibres are available on request and working in conjunction with ETS, documentation is available for the current assignments.

8.7.6 Copper Cable Network

The following communications systems currently transmit signal utilizing the copper cable network:

i. Telephone
ii. CCTV (in stations, facilities and local access only)
iii. BMS (in stations, facilities and local access only)
iv. C-Cure Access Control (in stations, facilities and local access only)
v. PA/VMS (in stations, facilities and local access only)
vi. TVM (in stations, facilities and local access only)

The telephone system requires the availability of telephone pairs for connections from the mini carrier remote at each future station to each of the following:

i. ROW phone
ii. Elevator access phone
iii. Washroom access phone
iv. Help phone
v. Service room phone

Currently, 300 pairs run north of University Station and 200 pairs south of University Station, for the radio system, LAN lines and the PA system.

The 200-pair telephone cable should be installed in a 103 mm duct or conduit between each future station.

Coordination is required with ETS on fibre or telephone allocations on the main trunk line. Existing allocation tables must be made available.

8.7.7 Remote Device Powering Methods

Today, the LRT CCTV system is a hybrid of analog and IP based cameras. Over time, the entire system will transition to IP cameras exclusively. These new cameras use PoE technology for their power source. ETS currently uses two methods to provide this power either the network device itself or a midspan PoE injector.

Regardless of the method, one critical feature of providing PoE power is the ability to be able to remotely power cycle any camera on the system in the event of device lockups. By default, all network devices used are manageable and can power cycle the end device. For PoE midspans, the device must be manageable. ETS currently uses PowerDsine managed 60 W PoE midspans for this purpose.

Another desired goal of centralized PoE is to achieve centralized power distribution and UPS backup of all end devices. All of the PoE injection devices must be UPS backed up by the central station UPS. Individual UPS units are not acceptable.

ETS has traditionally used Axis 60 W PoE outdoor PTZ cameras for outdoor use as they are rated to -50°C. Recently, ETS has piloted a 30 W equivalent with the tradeoff that it is only rated to -30°C. ETS still has limited experience with the reliability of this camera so use of the 60 W camera model is still recommended in new installs. The main driver to move away from the higher power camera is the fact that 60 W PoE devices are more difficult to find than 30 W products. Consultation with ETS as to the current standards at the time of installation must be completed prior to starting any design.

New semi-managed media converters are also being explored that convert fibre to copper and output up to 60 W PoE. They are dumb devices but have the ability to cycle the 60 W PoE output if the input data signal goes away. These devices connect directly to an SFP port on the upstream switch and when the SFP is disabled, the end device is power cycled. This works in terms of management of single devices but does not give the manageability to provide access to disparate devices in the same area due to the lack of VLAN support. Other manageable devices are being considered to fill this role. Combining this with hybrid power and fibre cable, a viable alternative to remotely powering devices from one central communications room is available for design. This is still under investigation and may be introduced as a standard at a future date.

8.7.8 Surge Arrestors

All outdoor Cat 6 runs must have surge arrestors installed at the base of the device to prevent surges from entering into the communications room.

All cameras installed outdoors shall have a Cat 6 in-line Surge / Lightning Arrestors with PoE pass-through on the data cable. This device shall be installed at the base of the pole or in the Junction Box located nearest the camera, in the case of building-mounted devices. All surge / lightning arrestors must be provided with a proper ground connection, as per the manufacturer's specifications and meeting CAN/CSA-B72-M87, UL-497B and TIA/EIA 607 grounding and surge suppression requirements.

A common solution today is to ensure that surge arresters are located on all Cat 6 cables at the building cable entrance points rather than at the device. The grounding point at the entrance should tie into the Communications Room grounding system. This prevents any voltage potential buildup or surges from lightning along the cable length between the surge arrestor ground at the device and the building ground. There are in-line suppression devices which are inserted on the inside of the building at the termination point. An example is the EMERSON Edco CAT6-5 PoE surge arrestor which is designed to protect expensive equipment against surges and transients entering a building on exposed transmission lines.

8.7.9 Entrance Conduits and Terminal Blocks

This is the area set aside for inter-station cabling or cable coming in from trackside (designated Area 1 in Appendix E).

i. Conduit should enter the room at either ceiling level or floor level.
ii. Locate on a single wall, preferably the side of the room nearest to the trackway or system-wide duct-bank.
iii. Provide 20 mm fire treated plywood (telco grade), painted grey, at least 2.4 m wide mounted floor to ceiling. Width must be sufficient to allow for cables to run up to cable tray and also hold gas tube protector cabinets, wall mount fibre splices, and the associated cable management.

8.7.10 Low Voltage Conduits & Distribution

This is the area set aside for cabling from within the facility to terminate in function specific cabinets such as Building Management (BMS), Access Control (AC) and Public Address (PA) (designated Area 2 in Appendix G).

i. Distribution cabinets should hold system specific RTUs as well as low voltage power supplies (24 V).
ii. All cables for these functions coming into the room from within the station should be terminated on this wall.

8.7.11 Station Telephone Distribution

This area serves as the main distribution frame for the station telephones (designated Area 3 in Appendix E).

8.7.12 Equipment Racks & Cable Tray Assembly

Equipment racks are generally located in the central part of the room (designated Area 4 in Appendix E), allowing access to both the front and back of the racks. All equipment racks must meet the following criteria:

i. Cabinet size to be 800 mm wide by 1200 mm deep and at least 42 RU high.
ii. Four post construction with lockable side panels and lockable quick release doors on both the front and rear. The front and rear doors should have card readers for cabinet access control.
iii. Front and rear doors made of 40% or better open mesh.
iv. The top panel must have 6 cable knockouts.
v. Up to 907 kg static load rating.
vi. 800 mm min. rack-mount width.
vii. #12-24 tapped, square-punched or specialty mounting rails with RMU markings for fast equipment installation.
viii. Integrated vertical cable management with cable management fingers on all 4 posts.
ix. Standard 12-24 UNC-2B threaded holes pattern.
x. A dual ground bar system must be provided with the rack, one for chassis ground and another for signal ground.
xi. When installed, racks must be electrically isolated from each other with dielectric. Lag shield anchors should be installed flush with the floor to enable the rack to be bolted down, but provide a level surface should the bolts be removed and the rack moved.
xii. Completed installation must be rated for Zone 3 earthquakes Working clearance on both front and rear must be: 2000 mm nominal is preferred; 1000 mm absolute minimum.
xiii. Static ground straps must be installed inside, in the front or rear, of the cabinet for handling of static sensitive cards.
xiv. Either static ground mats or static dissipative flooring must be used on the floor around racks to prevent static discharge damage.

Refer to Appendix F for illustrations of rack and cable tray layout configurations.

8.7.13 Cable Tray Structure

The cable tray structure is a vital component of proper design layout because many of the systems may couple into other systems via inductive noise. Moreover some elements, the ISP fibres in particular, are fragile and need to be physically separated from other more physically robust cables. Trays are also located around the perimeter of the room. A preferred cable tray layout design is shown in Appendix F.

The preferred layout has the following characteristics:

i. Distance between PA cables and any Telephone, Cat 6, or power cable is maximized.
ii. ISP Fibre cables and jumpers are physically isolated from copper cabling.
iii. Cables entering or exiting tray are protected with water falls.
iv. The signal ground bar is electrically isolated from other metal. No. 6 wire with lugs to connect from the ground bar to the rack ground must be used. This provides a secure but easy to remove connection.
v. 208 V AC and 24/48 V DC distribution is placed in conduit with j-boxes placed in each cabinet location. Flex conduit is used to connect the j-box and rack.
vi. Cable trays in publicly accessible areas must be completely enclosed with tamper resistant tops.

8.7.14 Ancillary Equipment

The following equipment must also be placed in the communications rooms (designated Area 5 in Appendix E):

i. Telephone
ii. Bulletin board which staff can use for entrance logs and notices
iii. Secured storage cabinet for misc. spares, maintenance manuals etc.

8.7.15 Communication Room Size

Based on the forgoing requirements the minimum size for the communication room is 42 m². Preferred ceiling height is 3940 mm. The minimum allowable ceiling height is 3050 mm.

The minimum door size is 915 x 2438 mm.

The following equipment and systems should not be allowed in the Communication Room unless environmental factors and precautions are taken into consideration in the design.

i. Water Pipes
ii. Wet Sprinklers
iii. Batteries or UPS systems

8.7.16 Environmental

Due to the sensitive nature of the equipment housed within the communications room, the environment must be maintained similar to an office environment as a minimum requirement. Heating and ventilation requirements are given in Chapter 12 Mechanical Systems, Table 3.

8.7.17 Grounding

Ground in a DC rail system is different than other environments. Ground loops and noisy equipment are common. To mitigate these effects the following measures must be taken:

Provide two ground systems as follows:

i. A chassis ground, which would tie into the building traditional ground system along with other systems in the building.
ii. A signal ground, which consists of either a separate ground rod or a larger than code ground cable tied directly to the building ground grid. The primary reason for this is that signals and traction power systems can feed noise back through the ground system.
iii. Oversized main ground bus bars should be used, ERICO TMGB-A25L33PT or approved equivalent.
iv. Resistance to earth from each *TGB should be 10 ohms or less for chassis ground and 5 ohms or less for signal ground.

8.7.18 Wayside Facilities

The following represents good design practice for communications vaults located in the wayside:

i. Vaults should be located such that entrance into and work around the vault fouls only one track (entrance must be > 3 m from the furthest track).
ii. Vaults should have a center hatch in order to not conflict with ladder rungs. A removable ladder could be added or carried in staff vehicles, if needed.
iii. Sharp edges need to be removed. Adding conduit bells will help to facilitate this.
iv. Cable racking should be added on all four sides of the manhole to dress cables properly and to store cables above floor level so that they will not be damaged.
v. Drainage into a sub-drain system must be provided so that standing water does not accumulate in the bottom.
vi. Preferred maximum vault to pullbox spacing is 200 m.

Refer to Appendix G for typical communication vault details.

8.7.19 Station Facilities

Typically, a large number of diverse cable runs are required to service nearly all areas of a station. It would be prudent for the architects and other designers of the station to develop a communications cable raceway implementation plan early in the station design stage.

In general, the following design practice for cable raceways should be followed:

i. Be continuous from end to end on each platform.
ii. Provide flexible access points. Communications devices such as CCTV or PA speakers can change location frequently before being finally located.
iii. Cable raceways in publicly accessible areas must be completely enclosed and tamper resistant.

Diagrams below illustrate below and above platform layouts that should be considered for design.

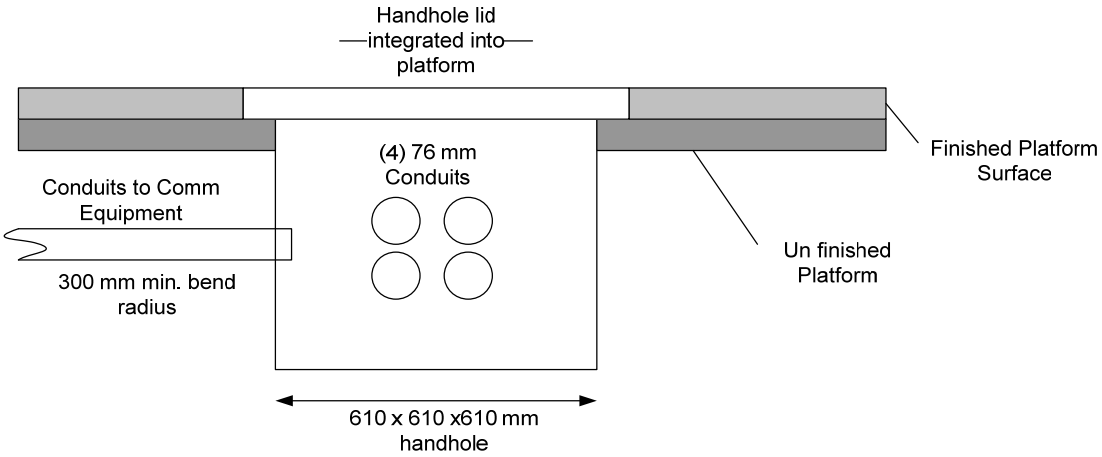

Figure 1 - Handhole Lid Integrated into Platform

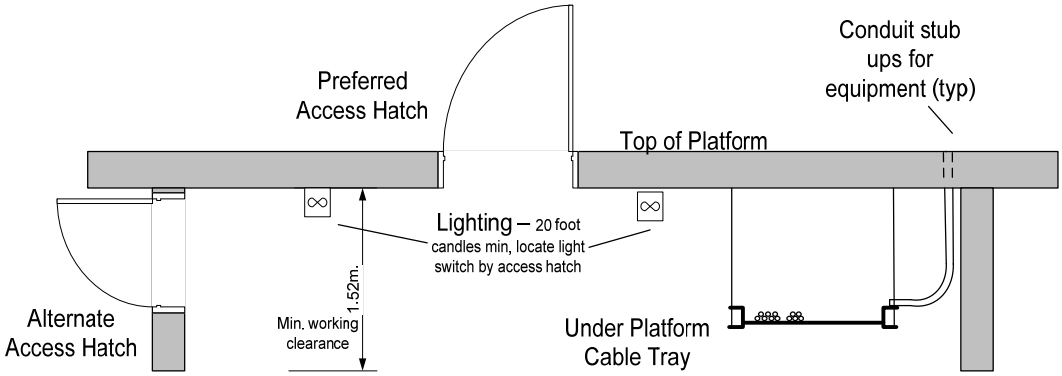

Figure 2 - Preferred Access Hatch

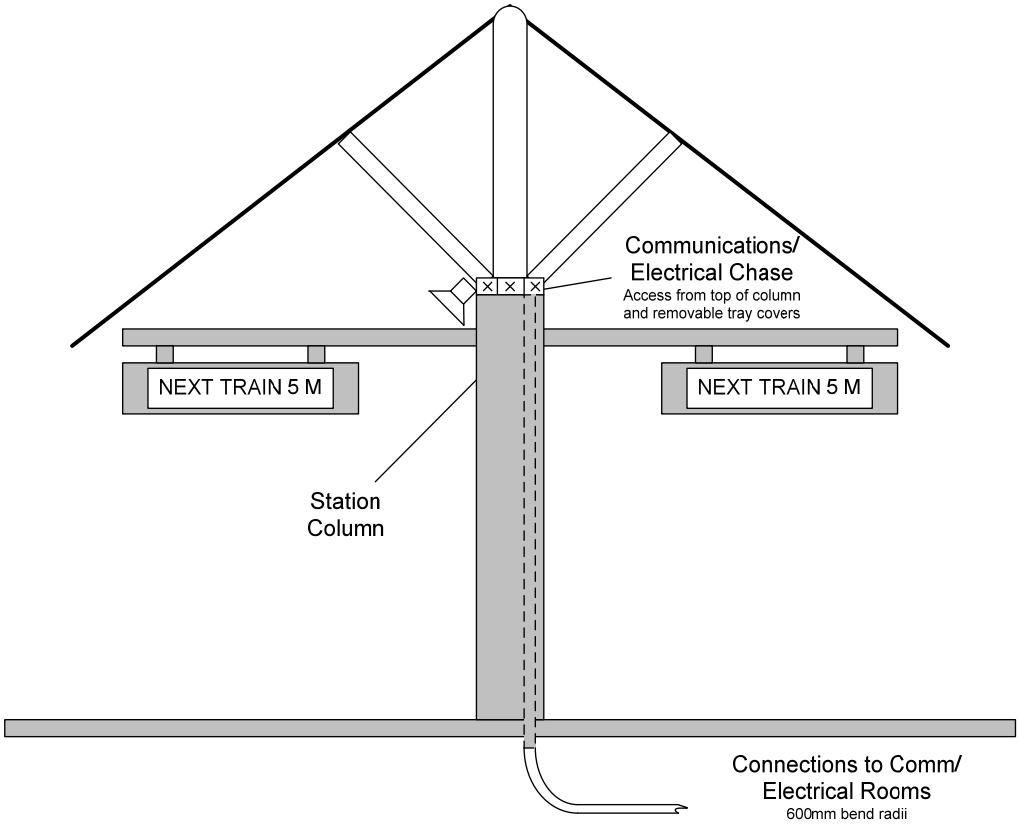

Figure 3 - Above Platform Layout

8.7.19.1 Co-located Communications Equipment

Communications equipment can frequently be co-located in Signal Bungalows or Traction Electrification Rooms. For this configuration, the following minimum requirements must be observed:

i. Communications equipment must be located in a dedicated space. This can be in either:

   a. 20 mm fire rated plywood backboard, painted grey, mounted on a wall

b. A NEMA 12 rated wall mount cabinet
c. Standard communications equipment rack as noted in Section 8.7.12

ii. If the equipment is electronic in nature or particularly sensitive to damage (i.e. fibre optics), then it must be located in either a wall mount cabinet or communication rack.
iii. Communications equipment must have a dedicated ground or separate tie to earth ground from other equipment located in the room to protect against noise.
iv. Copper cable shields must not be grounded in the remote equipment rooms. Single point ground must be observed and that ground must be in the Communications Room.

8.7.19.2 Out of Band Access

In order to effectively manage all remote devices, a separate, redundant network that does not connect to the main network backbone is used. This network is simply a ring of terminal servers that can be interfaced with in the event of a network outage so that remote devices can be accessed, configured and fixed in order to expedite the recovery of a major equipment failure. Each communications room at a minimum must have a dedicated serial terminal server unit on the Out of Band Network (OOB). This can be extended to wiring closets and other locations depending upon the criticality of the systems in those locations.

Essentially, the network consists of one device per communications room connected in an Ethernet ring topology. The ring has entry points from the corporate network or the internet to allow remote login capabilities to the network. The goal of the network is to be able to remotely configure devices in the event that they become unavailable on the regular IP interface in-band.

In a typical communications room, the following devices must be connected to the terminal server (assuming that they have serial ports and are within the 50 feet RS-232 will work):

i. Network devices
ii. PoE injectors
iii. Telephone gateways
iv. Amplifiers
v. PDUs
vi. UPS
vii. Video encoders
viii. Remote PA servers
ix. Radio Bi-Directional Amplifiers (BDA)

8.7.19.3 Security

The various subsystems of the communications network is broken into distinct services on the network and separated by a central firewall. This separation is critical to maintaining security between independent systems managed by various contractors and ensuring the requirements of each system are met in terms of QoS and security. Each of the independent subsystems must be on their own independent networks and separated by a central firewall. This firewall will ensure that only the required connections between systems can occur and ensure only authorized outside access can happen.

Currently, ETS uses 4 different firewalls to protect the network. One is a central core firewall, one is a VPN concentrator, one is for access to the internet and the last is for firewalling of the TELUS managed WAN services used to allow Bus facilities onto the ETS network.

This infrastructure will be increased in features, bandwidth and reliability moving forward to be able to accommodate new LRT line extensions operated by third parties. Each firewall is paired with a set of border routers to allow all connections from foreign networks to the ETS network.

In addition to the firewall, ETS will be moving to full encryption of all individual networks across the LAN and WAN to ensure all data is secure when it leaves a facility on its way to the datacenters.

8.7.19.4 Compute Environment

ETS is moving to a converged compute environment and standardization of all underlying server hardware. Vendors will no longer be allowed to supply their own equipment but must be able to work with ETS to ensure the server hardware required will fit into the ETS environment. This environment is still a work in progress and the latest ETS standards will apply. Refer to the ETS BCP on the converged compute environment for more details.

8.7.19.5 Storage Environment

ETS is moving to a converged storage environment and standardization of all underlying SAN hardware. Vendors will no longer be allowed to supply their own equipment but must be able to work with ETS to ensure the storage required will fit into the ETS environment. This environment is still a work in progress and the latest ETS standards will apply. Refer to the ETS BCP on the converged storage environment for more details.

8.7.19.6 Cabling and Wiring Methodologies

Cable management in all ETS facilities is critical. Although physical standards make up a small amount of the efforts put into an ETS communications system, it is an extremely important part of the overall health of each and every room. Industry studies show that almost 70% of maintenance costs are due to poor cabling practices.

As such, ETS requires that all cable installations conform to BICSI/TIA standards for installation. All cabling must be kept in a neat bundle within cable trays, waterfalls, wire ways in cabinets and cable management bars on the rear of patch panels. Only Velcro wraps are permitted to be used within ETS communications rooms for bundling of cables and patch cables.

Cables must be kept to the 90 m limit jack to jack and trying to push this limit by a few metres is unacceptable. As well, every cable run must go Jack to Jack. Installing plugs on either end and plugging directly into devices is unacceptable. If a device requires wires to be screwed down to terminals, then a patch cord with one end cut off should be used. Cutting off the jack in the field is not acceptable.

Adherence to the 40% maximum fill ratio of any conduit is crucial. Overfilling of conduits can lead to damaged cables and reduced performance of the cables in the conduit. Additional runs of conduit need to be considered to accommodate the cables and future needs. All conduit 90° bends require communication elbows that have a bending radius of 11x the cable diameter. Electrical 90°s are unacceptable in communications wiring. In addition, only180° of cable bends are allowed between pull boxes. This applies to the conduits in the communications rooms and to the main duct bank conduits.

When cabling to outdoor locations of devices, a surge suppressor at the base of the device must be provided and grounded at the device before the cable can proceed into the communications room.

8.8 COMMUNICATION CABLING GENERAL REQUIREMENTS

The following are general requirements for cabling to be installed on the LRT system. These requirements are to ensure that suitable products are used and to provide consistency in designs and installations on the system.

This section is presented in three parts: general considerations, wayside cabling and stations and facilities.

8.8.1 General Considerations

The quality of the cable and the design of cable connections and terminations are important factors in determining their overall performance.

8.8.2 Quality

8.8.2.1 Manufacturer Selection Requirements

All cable manufacturers must be approved by ETS. The selected manufacturer must provide all data required for evaluation by ETS and must make the arrangements for any required demonstrations and tests. Qualifications must be based on the following criteria:

8.8.2.2 Past Performance and Experience

The cable manufacturers must demonstrate previous successful experience in supplying wire and cable specified herein. A list of such installations must be provided for each cable manufacturer to be considered.

The number of years of experience required for the contractor must be confirmed with ETS.

8.8.2.3 Demonstrated Quality Assurance Program

Cable manufacturers, in accordance with the requirements of these guidelines, are required to have in place or implement, an effective quality assurance program adhering to the requirements of ISO 9001 to ensure purchase control performance. ETS reserves the right to audit the Manufacturer's facilities for conformance to the Contract. This may include, but is not limited to, first article inspections, source inspections, and on-site surveys. Such compliance must promote a thoroughly tested cable that will render long service life to the user. Prime concern must be focused on the necessary formal assurance requirements to insure that cable failure cannot be attributed to actions or lack of actions by the manufacturer.

8.8.2.4 Warranty

The Manufacturer must certify compliance with the following warranty prior to selection.

The Manufacturer must warrant that the design, material, and workmanship incorporated in each item of cable will be of the highest grade and consistent with the established, and generally accepted, standards for aerial and underground cable for transit applications. Each such item and every part and component thereof must comply with these requirements.

The Manufacturer must agree that this warranty will commence with the acceptance of each item of the cable, whether the defect is apparent or latent, and must continue for a period of eight years after initial satisfactory operation of the item or ten years after acceptance of the item, whichever comes first.

8.8.2.5 Contractor Requirements

Contractors, or suppliers of cable to ETS, must provide and perform the following:

8.8.2.6 Technical Data

The Contractor must provide full technical data that demonstrates compliance with the requirements of these technical specifications for each specified cable type that the Contractor plans to supply.

8.8.2.7 Demonstration Tests

The Contractor must make arrangements with the prospective cable manufacturers to perform demonstration tests, as required by ETS.

8.8.2.8 Sample Specimens

If requested, the Contractor must furnish to ETS, within 20 days after the Notice-to-Proceed, sample specimens in 1200 mm (4 ft.) lengths similar to that which the Contractor proposes to furnish for each type cable specified herein. The sample specimens will remain the property of ETS. The Contractor must not proceed to purchase without written approval.

8.8.2.9 After Cable Selection

The Contractor must monitor the manufacturer of the cable to assure that the approved Quality Assurance Program is being closely adhered to and that the wire and cable is being manufactured in accordance with these technical requirements and the approved submittals.

i. Each finished cable must be traceable to the test date on file for each step in its manufacturing process.
ii. ETS must have the right to make such inspection and tests as necessary to determine if the cable meets the requirements of these technical specifications. In addition, they must have the right to reject cable that is defective in any respect.
iii. ETS must be given 15 days advance notice of the date the cable will be ready for final testing so that ETS may witness the tests, if it so elects.
iv. Physical tests will be made on samples selected at random at the place of production.
v. Each test sample should be taken from the accessible end of different reels. Each reel selected and the corresponding sample must be identified. The number and lengths of samples must be as specified under the individual tests. All applicable tests for the cable materials and cable construction specified must be performed.
vi. Certified test reports must be furnished for the finished cables no later than the time of shipment. In addition to the test results, each test document must indicate the date the tests were performed and the signature of the manufacturer's authorized representative.
vii. ETS reserves the right to conduct those tests to provide further satisfaction that the cable is manufactured in accordance with the requirements of these technical specifications.

8.8.3 Design Factors

Cabling design must include the following elements:

i. Overall diagram of the Wayside Cable and its interconnections clearly identifying each cable with ID, cable type, demarcation point, and any other significant transition points such as splices or slack coils.
ii. Overall riser diagram for each station or facility showing both horizontal and vertical cable runs, transition points, slack coil placement, support, and demarcation points. Each diagram must clearly identify each cable, conduit, room, cabinet, and pullbox.
iii. Cable schedules showing in detail, each cable run from termination point to conduits and pull boxes, to termination point for both wayside and station cabling.
iv. Conduit schedules for all communications conduit which clearly show which cables are placed in which conduit and their fill ratios and calculated pulling tensions.
v. Termination schedules showing wire by wire or fibre by fibre detail of each termination, patch, cross connect and splice.

8.8.4 Outside Plant Cabling

8.8.4.1 Copper Paired Cable

8.8.4.1.1 Minimum Requirements

Copper cables must conform to the following minimum requirements:

i. Conductors must be 22 AWG, or larger, tinned copper, meeting Canadian Electrical Code for the intended application.

ii. Conductors and cable inner/outer jacketing must be insulated with Polyethylene (PE), Polyolefin (XLPO), or Cross-linked Polyethylene (XLPE or UL type XHHW-2) that will meet the following minimum requirements:

   a. Sunlight Resistant
   b. Flame Test Rated FT4
   c. CSA cold impact/bend test at -40 deg C
   d. Suitable for direct burial
   e. Rated for wet/dry environments with temperature range from -40°C to +70°C.

iii. Cables must meet all other requirements of direct burial outside plant cables as listed by ANSI/ICEA for the intended application (i.e. control wiring, telephony, or broadband).
iv. Cables exposed or installed aerially must be rated for installations to -50°C.
v. Cables installed in tunnels or other confined spaces, intended for personnel or public use, must not use Polyethylene (PE) and must comply with the following Toxicity. Requirements (Boeing Specification Support Standard BBS-7239):

   a. Carbon Monoxide (CO) < 3500 ppm
   b. Carbon Dioxide (CO_2) < 90000 ppm
   c. Hydrogen Fluoride (HF) < 200 ppm
   d. Nitrogen Dioxide (NO_2) < 100 ppm
   e. Hydrogen Chloride (HCl) < 500 ppm
   f. Hydrogen Cyanide (HCN) < 150 ppm
   g. Sulfur Dioxide (SO_2) < 100 ppm
   h. Hydrogen Bromide (HBr) < 100 ppm

8.8.4.1.2 Procurement & Installation Requirements

i. All outside plant cables, more than 300 m in length, must be ordered cut to length from the manufacturer and delivered on separate reels.
ii. Cable must be labeled as follows (outer jacket must be marked with the following information):

   a. Cable Manufacturer
   b. Number of Pairs/Conductors
   c. Cable Function (i.e. telephone, SCADA, etc.)
   d. Halogen Free, Low Smoke. (if applicable)
   e. Date Coded (MMYY).
   f. Sequential Marking (a mark every foot or metre). Marking must be made in contrasting colour, either black or white, and indented into the jacketing.

iii. Cables delivered to site or the contractor's site office must be stored in a covered warehouse facility.
iv. Prior to installation, all conduits must be rodded, mandrelled, and cleaned. Bells must be placed upon all conduit ends. Sharp edges, that the cable may be pulled over, must be protected. Pulling eyes and cable racking must be added to all manholes.
v. Installers must use breakaway swivels set to a pulling tension 95% or less than the manufacturer's maximum rated pulling tension. When pulling multiple cables, only those cables directly tied to the swivel must be added to capacity of the swivel.
vi. When preparing to pull or lay cable, cable must not be placed or dragged upon the ground. Tarps must be used to protect cable during preparation. Cables must not be pulled through a cable tray or trough.
vii. A 15 m service loop must be placed in manholes approximately every 300 m and at each cable end.
viii. Cables must be labeled with cable ID at each cable end, in each pull box and in each manhole.

ix. Cable must not be spliced in manholes. If a splice is required, a pad or pole mounted cabinet must be installed with a minimum of 150 mm above ground level or flood level, whichever is higher.
x. All outside plant copper cables must be terminated within 15 m of the building entrance All outside plant copper cables must be terminated on gas-tube protector (lightning protectors) blocks similar to Porta Systems 175BCXN-400
xi. Cable armor, or shields, must be grounded only on the north or west end of the cable (single end grounding) to prevent ground loops.

8.8.4.1.3 Testing

i. Cable must be tested at least three times as follows:
   a. At the manufacturer's facility prior to shipment.
   b. After receipt by contractor or agency prior to installation.
   c. After installation.
ii. Testing must test for basic continuity and any functionally important requirements such as data throughput or cross-talk for higher frequency transmission cables. As a minimum cable must be tested to meet the manufacturer's stated performance requirements.
iii. Conductors with 600 V or better insulation and greater than 18 AWG must be megger tested.

8.8.4.2 Data and Telephone Structured Cabling

All cable as described herein including, but not limited to:

8.8.4.2.1 UTP Cable

i. All horizontal data and voice cable to be 4 unshielded, twisted conductor pairs. Cable to be CMP rated and certified by CSA as type PCC with a minimum FT6 flame test rating, and in accordance with requirements of the Authority Having Jurisdiction.
ii. Cable to meet or exceed Cat 6 standards for 250 MHz as per ANSI/TIA-568-C.2 (2009) Balanced Twisted-Pair Telecommunications Cabling and Components Standard.

8.8.4.2.2 Copper Analogue: Vertical Riser/Backbone

i. Unshielded Multi-pair Category 3 cable.
ii. Physical Description
   a. Conductors: 25 pair 24 AWG solid copper conductors.
   b. Cable Groups: formed into binder groups of pairs.
   c. Insulation: thermoplastic-covered individuals; Riser-rated overall jacket, complying with requirements of CEC.
   d. Colour coding: each conductor colour coded in accordance with industry standard colour scheme for 25 pair, 50 pair, 100 pair, and 200 pair cables. Each conductor tracer-coloured.
iii. Transmission Characteristics:
   a. DC Resistance: Maximum 94 Ohms / km.
   b. Mutal Capacitance: Maximum 262 pF/ 100 m @ 1 MHz
   c. Characteristic Impedance: 100 Ohms ± 15%.
   d. Attenuation, maximum:
      1. 2.2 dB/ 100 m @ 772 kHz
      2. 2.6 dB/ 100m @ 1 MHz
   e. 5 Near End crosstalk coupling loss between pairs within a 25-pair binder group equal to or greater than:

1. 171 dB @ 1 km @ 1510 kHz.
2. 82 dB @ 1 km @ 10 MHz

8.8.4.2.3 Outside Plant (OSP) Cabling

i. All OSP balanced twisted pair cabling to have an operational temperature range of -40˚C to +60˚C and an installation temperature range of -20˚C to +60˚C. The cable is to be sunlight resistant.
ii. Where outside plant cabling is terminated within entrance facility rooms provide UL-497B listed Building Entrance Protection device for all copper cabling with the exception of cable provided by Utility Telecommunication Providers (Telus, Rogers, Shaw, etc.).
    a. Approved Building Entrance Protection Device: Emerson BEPNC series, CommScope 489 Series, or ETS approved equal.
    b. Utility Telecommunications Providers are responsible for provision of all Building Entrance Protection devices required for their services as installed.
iii. Provide individual isolation Entrance Protection/Surge Protector device for each communication or security device connected via copper Cat 3 or Cat 6 type cable installed outside of the building envelope.
iv. Approved Entrance Protection/Surge Protector device: Citel MJ8-POE Series, ITW Linx SurgeGate, or ETS approved equal.
v. Ground all entrance protector devices in accordance with CEC and ANSI/TIA-607B.

8.8.4.2.4 Testing

Test all runs upon completion of permanent terminations, using instrumentation acceptable to ETS or their Consultant. Before commencing testing, submit sample test data sheets and information with respect to test instrumentation to be used.

i. Acceptable Test Instruments:
    a. Copper: Fluke DSX-5000 or approved equal.
ii. Copper test instruments to meet the requirements of ANSI/TIA-1152 (2009) Requirements for Field Test Instruments and Measurements for Balanced Twisted-Pair Cabling.
iii. Test instrument firmware to be latest version as supplied by test device manufacturer.
iv. Copper Media:
    a. All tests required for system to be Certified Cat 6 by Manufacturer. Test all permanent and channel links to ANSI/TIA-568C.2 Category 6 250 MHz using methods per ANSI/TIA-1152(2009).
    b. Before recording results, compare readings to predicted values based on cable specification and run length, using connector and patch cord losses as part of predicted value. Retest runs with:
        1. Resistance and capacitance readings more than 10% above predicted values.
        2. NEXT values 3 dB lower than predicted values.
        3. Attenuation values 2 dB higher than predicted values.
        4. Re-terminate or re-install and retest as necessary to correct excessive variations.

8.8.4.3 Fibre Optic Cables

Outside plant cables must be used for installation in metropolitan underground ducts, cable trays, open air and subway systems or other areas where uncontrolled temperature and humidity exist and/or where cable may be exposed to water and pest damage. Cable must be of loose tube, gel filled design having buffer tubes, central dielectric member, and *aramid

yarn outer core strength member(s). Due to potential placement of outside plant fibre cables adjacent to power conductors, cables must not contain any metal parts, pieces or attributes.

Note: (Aramid any of a group of lightweight but very strong heat-resistant synthetic aromatic polyamide materials that are fashioned into fibres, filaments, or sheets and used especially in textiles and plastics.)

8.8.4.3.1 Minimum Requirements

Fibre cables must conform to the following minimum requirements and or Rural Utility System (RUS) PE-90, whichever is more stringent:

i. Buffer Tubes – The optical cable must be loose tube, gel filed design with up to 12 colour coded fibres contained within loose tubes filled with water blocking gel. The loose buffer tube filling must be made of an abrasion resistant material while the buffer tube filling must be a homogeneous based gel, dermatologically safe, non toxic, non-nutritive to fungus, non-hygroscopic, and electrically non-conductive.
ii. Colour Code – Individual fibres in each buffer tube, and each buffer tube must be colour coded per EIA/TIA 598-D.
iii. Cabling – buffer tubes must be cabled around the central member using either a helical stranding or reverse oscillation method. Fillers may be used to maintain the cable geometry. The interstices between the tubes must be filled with a water blocking gel similar in property to that used inside the buffer tubes.
iv. Fillers – Fillers must be solid polyethylene, or similar material, rods of the same diameter as the buffer tubes.
v. Central Member – the central member that serves as an anti-buckling element must be a glass reinforced plastic rod with a similar coefficient of thermal expansion as the optical fibre.
vi. Tensile Strength Member – a layer of aramid yarn must be applied over the cabled core in a counter-helical fashion to provide the desired tensile strength.
vii. Rip Cord – a rip cord of different colour than the aramid yarn must be pulled in longitudinally under both the outer and inner jackets.
viii. Both cable inner and outer jacketing must be insulated with Polyethylene (PE), Polyolefin (XLPO), or Cross-linked Polyethylene (XLPE or UL type XHHW-2) which will meet the following minimum requirements:

    a. Sunlight Resistant
    b. Does not promote fungus growth
    c. Flame Test Rated FT4
    d. CSA cold impact/bend test at -40 deg C
    e. Suitable for direct burial
    f. Rated for wet/dry environments with temperature range from -50°C to +60°C.
    g. Free of metal locational or protective elements
    h. Fibre jacket Crushproof rating – 1156.58 N (260 lbs/ft/0.2248)

ix. Cables must meet all other requirements of direct burial outside plant cables as listed by ANSI/ICEA for the intended application (i.e. control wiring, telephony, or broadband).
x. Cables exposed or installed aerially must be rated for installations to -50° C.
xi. Cables installed in tunnels or other confined spaces intended for personnel or public use must comply with the following Toxicity Requirements (Boeing Specification Support Standard BBS-7239):

    a. Carbon Monoxide (CO) < 3500 ppm
    b. Carbon Dioxide (CO_2) < 90000 ppm
    c. Hydrogen Fluoride (HF) < 200 ppm
    d. Nitrogen Dioxide (NO_2) < 100 ppm
    e. Hydrogen Chloride (HCl) < 500 ppm
    f. Hydrogen Cyanide (HCN) < 150 ppm
    g. Sulfur Dioxide (SO_2) < 100 ppm

h. Hydrogen Bromide (HBr) < 100 ppm

xii. Outer jacket must be marked with the following information (cable print):

a. Cable Manufacturer.
b. Number of Fibres.
c. Fibre Type (SM or MM).
d. Halogen Free, Low Smoke.
e. Date Coded (MMYY).
f. Sequential Marking (a mark every foot or metre). Markings must be of a contrasting colour, either black or white, and must be indented into outer jacket.

xiii. Single Mode Fibre - Performance Requirements

Single mode fibres must be Corning SMF-28e or equal as follows:	
Fibre Core Diameter	8.2 – 8.8 microns
Fibre Diameter	125 Microns +/- 7 microns
Fibre Type	Step index
Cladding Non-Circulatory	≤ 2.0%
Minimum Bend Radius (No load) (Full Load)	 a ≥ 10x cable diameter ≥ 20x cable diameter
Attenuation:	≤ 0.35 dB/km @ 1285 - 1330 nm ≤ 0.22 dB/km @ 1525 - 1575 nm
Cutoff Wavelength	≤ 1260 nm
Zero Dispersion Wavelength	1310 ≤ Wavelength ≤ 1324 nm
Zero Dispersion Slope	≤ 0.092 ps/(nm^2*km)
Environmental Induced Attenuation For Water Immersion For Humidity Cycling For Temp Dependence	≤ 0.05 dB/km @ 1310, 1550 nm 23°C +/- 2°C - 10°C to +85°C up to 98% RH - 50°C to +85°C
Proof Test Stress	≥ 100 kpsi (0.7 GPa)
Coating Diameter	245 + 5 microns
NOTE: Multi Mode Fibre – must not be used	

8.8.4.3.2 Procurement & Installation Requirements

i. All outside plant cables, more than 300 m in length, must be ordered cut to length from the manufacturer and delivered on separate reels.
ii. Cables delivered to site or the contractor's site office must be stored in a covered warehouse facility.

iii. Prior to installation all conduits must be rodded, mandrelled, and cleaned. Bells must be placed upon all conduit ends. Sharp edges, which cable may be pulled over, must be protected. Pulling eyes and cable racking must be added to all manholes.
iv. Installers must use breakaway swivels set to a pulling tension 95% or less than the manufacturer's maximum rated pulling tension. When pulling multiple cables, only those cables directly tied to the swivel must be added to capacity of the swivel.
v. When preparing to pull or lay cable, cable must not be placed or dragged upon the ground. Tarps must be used to protect cable during preparation. Cables must not be pulled through cable tray or trough.
vi. A 15 m service loop must be placed in manholes approximately every 300 m and at each cable end.
vii. Cables must be labeled with cable ID at each cable end, in each pull box and in each manhole.
viii. Cable must not be spliced in manholes. If a splice is required, a pad or pole mounted cabinet must be installed with a minimum of 150 mm above ground level or flood level, whichever is higher.
ix. All outside plant cables must be terminated within 15 m of the building entrance.
x. Fibres must not be field terminated. Only factory polished pigtails must be used to terminate fibres.
xi. Fibres must be terminated with Telcordia compliant SC connectors in panels not exceeding 72 fibres in a single panel.

8.8.4.3.3 Testing

Cable must be tested at least three times: first at the manufacturer's facility prior to shipment; second after receipt by contractor or agency prior to installation; and third after installation.

Tests must include the following:

i. Grading of all terminations by TIA/EIA-455-57B.
ii. End-to-end bi-directional power meter test at 1310 and 1550 nm for single mode fibre.
iii. Bi-directional OTDR test at 1310 and 1550 nm for single mode fibre.
iv. Optical Spectrum Analysis
    a. Range: 1250-1650 nm.
    b. Resolution: +/- 0.033 nm.
    c. Accuracy: +/- 0.015 nm.
    d. Power accuracy: 0.4 dB.
v. Chromatic Dispersion Analysis
vi. Range 1250 – 1650 nm.
    a. Wavelength accuracy: 0.1 nm.
    b. Dispersion accuracy: 1.6 ps/nm.
vii. Polarization Mode Dispersion Analysis both 1st and 2nd order
    a. Range: 0 – 115 ps
    b. Accuracy: +/- (0.020 +/- 2 % of PMD)
viii. Calculation of the following:
    a. Span Loss (total loss of span from patch panel to patch panel)
    b. Optical Loss margin defined as the additional loss that can be added to a fibre optic span without adding additional bit errors or packet loss to any given circuit on the optical MUX
    c. Return Loss (as measured from a matching connector)
    d. Splice Loss
    e. Termination Loss
    f. Physical distance to all fibre features correlated with actual track positioning

ix. The following test values must be used as pass criteria:

   a. Splices < 0.1 dB loss
   b. Terminations < 0.25 dB loss and better than -55dB return loss (matching)
   c. Total Loss < Calculated span loss
   d. Optical Loss Margin > 10dB

x. Test data must be provided in static and dynamic format:

   a. Static format must be in format compatible with other project delivery requirements.
   b. Dynamic format must be in native machine format suitable for additional analysis by ETS.
   c. Additional software must be provided by the contractor to read the native format files as necessary.

8.8.5 Station/Facilities

The cabling requirements for stations and facilities must differ in the following ways:

i. No hydroscopic gel must be used. If cables are known to be placed in a wet location, additional protection must be obtained with water absorbing polymer tape.
ii. Fibre cables may utilize a tight-buffer configuration as well as loose tube.
iii. Cables installed in stations/facilities, intended for personnel or public use, must comply with the following Toxicity Requirements (Boeing Specification Support Standard BBS-7239):

   a. Carbon Monoxide (CO) < 3500 ppm
   b. Carbon Dioxide (CO_2) < 90000 ppm
   c. Hydrogen Fluoride (HF) < 200 ppm
   d. Nitrogen Dioxide (NO_2) < 100 ppm
   e. Hydrogen Chloride (HCl) < 500 ppm
   f. Hydrogen Cyanide (HCN) < 150 ppm
   g. Sulfur Dioxide (SO_2) < 100 ppm
   h. Hydrogen Bromide (HBr) < 100 ppm

iv. Cable must be labeled, at each transition point, every 15 m, and at each end.
v. ISP fibre cables must be physically separated for protection.
vi. PA cables must be routed in a separate conduit system or shielded to prevent inductive coupling and the introduction of noise into the PA system.

Cables placed in trays must be neatly placed with the maximum distance placed between cables known to cause interference or inductive coupling. Diagram 8.7 below, Preferred Cable Layout in Cable Tray, is an example of this application. Cable ties or lacing must be used to hold cables in place.

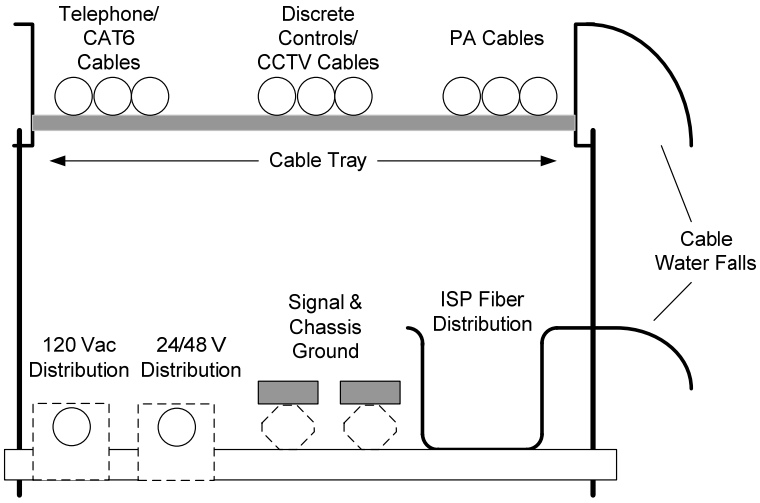

Figure 4 - Preferred Cable Layout in Cable Tray

8.9 SYSTEM NOMENCLATURE AND CONVENTIONS

Naming conventions for the various systems and system components are described in the released document "Naming Conventions Best Common Practice, Issue 1.0", dated January 2016. This document provides engineering guidelines to naming of all devices, servers, network components, and cables used in ETS communication systems.

For this section, the following overall system components are relevant;

i. Network Infrastructure
ii. Vaults, Conduits and Duct Banks
iii. Out of Band Access Infrastructure
iv. Security Infrastructure
v. Compute Infrastructure
vi. Storage Infrastructure

8.9.1 Cable Labeling and Identification

All control wiring should be labeled consistent with the existing EMCS system using typed (non-hand written) snap or slip on type wiring labels.

All control panels must be labeled with lamicoid labels attached with pop-rivets.

All EMCS panels should be provided with input / output panel directories.

All Point identification must follow current City of Edmonton standards.

All end devices must be labelled with identification tags or decals as per the following minimum requirements:

i. Laminated tags must be made from the following materials:
    a. Printed tag: 20 lb. white bond with black lettering.
    b. Laminating Material: Luggage type laminating film minimum 7 mm thickness.
    c. Fastening Device: Nylon ties (zip ties) sized for each application.
ii. Laminated decals must be made from the following materials:
iii. Printed tag: pre-cut white labels c/w adhesive backing suitable for printing on a laser printer.
iv. Laminating Material: pre-cut 3 mm clear acetate film c/w adhesive backing.

v. Laminated tags or decals should have the following approximate dimensions:
vi. Printed tag: 50 mm x 100 mm.
vii. Laminate Material: 60 mm x 110 mm.

Each tag must contain the following information (as a minimum) printed on one side of the tag:

i. System/Point Mnemonic.
ii. Point Descriptor.
iii. Point Type (eg. DI, DO, AI, AO OR TOT)
iv. End Device Type (e.g. Ts, Dm, Ry, etc.)
v. Associated RPU, LCU or ZC tag.
vi. Physical Point Address.
vii. Date.

8.9.2 Cabling and Wiring Color Code Conventions

Cabling and wiring color code conventions should follow the latest existing ETS standards. The City of Edmonton has identified color coding separation between IT structured cabling and Security structured Cat 6/6a cables in the Communications NLRT Naming and labeling Conventions section of the Construction Management Contract reference; 28 40 00 Building Management Subsystems – 11.09.28. The following cabling wiring code designations apply:

i. Cable jacket cover shall reflect the system to easily identify and bundle cables:

- Blue Jacket = Network
- Yellow Jacket = Security/Surveillance
- Grey Jacket – Voice
- Green Jacket = CTC / SCADA

ii. Modular jack Inserts in Network Patch Panels and Workstation Outlets shall be color-coded:

- Blue Jack = Network
- Yellow Jack = Security/Surveillance
- Grey Jack – Voice
- Green Jack = CTC / SCADA

8.10 COMMON SOFTWARE ENVIRONMENT

8.10.1 General

There is an extensive array of electronic and computer equipment manufactured and supplied by a variety of firms located in the ETS Control Centre.

Prior to commencing detailed design, the accuracy of the following information should be confirmed with the ETS LRT Communications group.

i. Meridian 1 telephone handsets or current equivalent: Supplier Telus Communications, Edmonton
ii. Programming of telephones: Telus Communications, Edmonton
iii. CCTV equipment, including monitors, keyboards, recording equipment: Chermik Communications and Convergint Technologies
iv. CBTC equipment, including workstations, software, and display panel systems: Thales
v. BMS equipment, including workstations, software, and printers: ESC Automation, Edmonton
vi. City of Edmonton corporate network workstations, including software and printers: City of Edmonton IT Branch
vii. Radio system workstations, including software and printers: HARRIS
viii. SCADA workstations, including software and printers: EPCOR, Edmonton

ix. Fare equipment workstations, including software and printers: CUBIC, San Diego, CA
x. Key Systems Inc. – New York (Best Access Calgary is the closest local representative)

Due to the complex nature of, or the importance of certain systems, such as the CTC system and the fare equipment system, LRT staff may direct and manage the purchase of the equipment and software. Close consultation with the LRT staff is required early in the design stage to ensure that the expected outcomes are achieved.

8.10.2 Identity Management

ETS uses several methods for identity management. The primary access database is the internal Windows Active Directory environment that provides access to all windows workstations and servers. Red Hat Enterprise Linux servers are authenticated against Red Hat iDM. These identity systems are available for access to any applications that require user verification to login.

The second method is via LDAP and this allows end devices that support the authentication mechanism to be centrally authenticated in a similar manner to windows devices.

The third method is via LDAP and two-factor authentication. This allows end devices that support the authentication mechanism to be centrally authenticated in a similar manner to windows devices.

The fourth method is via RADIUS and this allows end devices that support the authentication mechanism to be centrally authenticated in a similar manner to windows devices.

The last method is a combination of RADIUS and two-factor authentication. ETS uses two factor authentication for all outside access to ETS systems.

Any new devices or applications that need to be installed in the ETS environment must be able to be authenticated using one of these methods. In the future, these methods may be expanded as required to accommodate more current methods of authentication especially where standard logins to systems will mandatorily require a password and two-factor authentication.

8.10.3 DNS, DHCP and IP Address Management

All DNS, DHCP and IP Address management functions are controlled by centralized infrastructure maintained by ETS communications. Any additions or new assignments must be done with ETS personnel. For more details on the current environment maintained by ETS for these functions, refer to the ETS BCP document. BCP documents are available on request for the purposes of completing contract work.

8.10.4 Security

All ETS servers and device must be hardened to ensure the strictest levels of security and best practices for each particular operating system.

ETS uses a centralized secure network to allow communications to pass from internal networks to external networks. Any passing of traffic from internal to external must be via proxy through this Demilitarized Zone (DMZ). Direct connections from external networks to internal networks is not allowed. These standards are maintained as per ISA 99 and APTA communications standards.

In addition, the general principal of having ready management workstations always on inside the ETS network and using remote desktop protocols to remotely control them is the only way to maintain any devices. Contractor laptops or computer devices that are used outside of the network cannot be directly connected to the ETS network environment.

Circumventing security measures or connecting systems directly or indirectly to the internet without the prior expressed consent and approval, in writing, from ETS LRT Communications is prohibited and considered unacceptable.

8.10.5 Remote Access

ETS uses an internet facing VPN concentrator to allow remote access to vendors and personnel for the exclusive purpose of maintaining the internal ETS systems. This VPN only allows access for remote control of the internal workstations that are used for direct control and configuration all the ETS systems.

The system is secured using an industry standard two factor authentication methodology reducing the reliance on passwords being the only entry mechanism. This VPN is available for any vendor to use and is the only method ETS will allow for remote vendor access into the ETS systems.

8.10.6 Monitoring and Alarming

Monitoring and alarming are a critical piece that must be considered with any design. ETS currently uses a central SNMP server that monitors all devices, servers and workstations to alert to any issues with any device. Agents are also deployed to monitor the health of applications examples are web servers and database servers. Alerts are then generated for personnel to look into and resolve any issues. All new devices and systems must be entered into this system and a monitoring plan must be part of any design to ensure the appropriate items are being looked at and what needs to be done to resolve the most common issues.

8.10.7 Configuration Management

Configuration Management must be included with all new devices and systems to ensure disaster recovery and a proper audit trail for any configuration changes that may lead to issues. Currently, there is a centralized system to manage all configurations for the network devices. Backups of configurations of other devices must be part of the maintenance plan of any new systems.

8.10.8 Software

Software is a major and integral part of proper and good operations of communications. ETS LRT Communications has standardized on the following software for overall operation and deployment efficiency.

i. Operating Systems

   a. Linux: Red Hat Enterprise Linux (RHEL) 7.3 64-bit or later
   b. Windows: Microsoft Windows 2012R2 64-bit or later
   c. Hypervisors: Red Hat Enterprise Virtualization (RHEV) 3 64-bit or later
   d. Cloud Environment: Red Hat OpenStack (RHOS) 10 64-bit or later

   No other software versions maybe substituted or replaced without the express approval, in writing, from ETS LRT Communications.

ii. Virtualized Networking

   a. Virtual Switches: Openvswitch 2.6.1 or later and Nuage Networks virtual platform

   No other virtual switching maybe substituted or replaced without the express approval, in writing, from ETS LRT Communications.

iii. Applications: All vendors must supply a 64bit based application. Applications must be the latest, stable 64bit version if supplied by a third party software company. Third party software vendor examples are Red Hat or Microsoft.

a. ETS LRT Communications prefers applications written and deployable on RHEL. When suppling such applications:

    i. Applications must follow Linux Standards Base (ISO/IEC 23360)

b. Windows Applications must be accompanied with GUI based configuration tools to aid in application configuration.
c. Applications must expose a comprehensive application programming interfaces (API) leveraging REST based web services. Data to and from the API interface must be in JSON. APIs must allow for full configuration and management of the application.

iv. Databases

a. Oracle 12c 64 bit or later, in cluster mode
b. Percona MySQL XtraDB Cluster 5.7.16 64 bit or later
c. Microsoft SQL Server 2016 Enterprise 64 bit, in cluster mode

v. Firmware: Any systems that utilize firmware such as storage, network or compute elements must have the latest firmware and must be easily upgradable. All elements must expose a comprehensive application programming interface (API) leveraging REST based web services. Data to and from the API interface must be in JSON. APIs must allow for full configuration and management of the firmware and/or underlying element.

vi. Big Data

a. Hortonworks Data Platform 2.5 64 bit or later
b. Hortonworks Data Flow 2.1.1 64 bit or later
c. Tableau Server 10.1.3 64 bit or later

vii. Directory/LDAP Server

a. Red Hat Directory Server 10.1 64 bit or later in a multi-master configuration.

    1. 389 Directory Server is unacceptable.

b. UnboundID Directory Server is also acceptable, please obtain express approval, in writing, from ETS LRT Communications before selecting this Directory Server.

All external non-ETS LRT Communications personnel must be created in the Directory Server. A trust relationship must be established with the Identity Management system as listed below to import ETS LRT Communications personnel and maintain credential sync.

viii. Identity Management

a. Red Hat iDM and Windows AD.
b. Windows Active Directory on Windows 2012 R2 64 bit or later.

If applications from vendors use both identity management systems, then a two way trust and sync must be established between Red Hat iDM and Windows AD.

ix. Systems Automation and Maintenance

a. Ansible Tower 3 64 bit or later

    1. All Ansible playbooks must be supplied that are utilized for system deployment and configuration.

b. Red Hat Satellite Server 6.2 64 bit or later

    1. All RHEL updates must be performed using Red Hat Satellite Server

x. Monitoring

a. Observium Professional Edition

1. All MIBs should be integrated into Observium.
2. Appropriate graphs, metrics and statistics must be provided in Observium.
3. Logs should be sent to Observium from Windows and Linux.
    i. Datagram Syslog Agent is a freely downloadable application send Windows Event Logs to a syslog server.

Unauthorized software that may compromise the underlying system - as a whole - is unacceptable.

8.10.9 Software Updates and Lifecycle

Software updates and lifecycling are important aspect in the smooth operation of overall systems. There are three major categories of software that require software updates:

i. Operating Systems: Operating systems (OS) must be kept current and up to date. This is to prevent threats to the system whether they are initiated internal or external to the system. Updates that address OS bugs, vulnerabilities and feature enhancements must be installed. Any OS that is approaching its end of life must have an upgrade path to a more recent and current version with minimal negative effect on the systems' operation. Updates must NOT be installed directly, instead the following methods must be used:
    a. Red Hat Enterprise Linux: This OS must be updated using Red Hat Satellite Server hosted on premise. This host must only perform this function. All vendor supplied software must be in RPM format.
    b. CentOS Linux: This OS must be updated using a Red Hat Satellite Server or a YUM repository hosted on a separate host on premise. This host must only perform this function. All vendor supplied software must be in RPM format.
    c. Microsoft Windows: This OS must be updated using a WUS server hosted on premise. This host must only perform this function. All vendor supplied software must use an GUI based installer. MSI and EXE formats are the most common installation format as available from Microsoft.
    d. Hypervisors: VMWare must be updated using VMWare Update Manager. RHEV must be updated using Red Hat Satellite Server.

ii. Applications:
    a. All Linux applications should be upgradable using Ansible and Red Hat Satellite Server
    b. All Windows applications should be upgradable using Ansible, Chocolatey and WUS server.

iii. Firmware:
    a. Firmware should be deployable at a minimum using tftp/sftp/ftp and/or web ui and/or APIs and/or Ansible

ETS LRT Communications uses Ansible to automate configuration and deployment of systems and maintain lifecycle plans. It is mandatory that vendors have a clear understanding of Ansible and Ansible Playbooks.

8.10.10 Logging, Big Data and Analytics

Analytics and Logging are vital in understanding trends, metrics and patterns. They provide valuable insight into various aspects of the LRT system and allow the appropriate personnel to combine previously thought non related data points to generate a pattern or trend.

As a simple example, tracking hourly temperature patterns combined with tickets dispense and train arrival times could lead to a good understanding of when TVMs maybe out of tickets

given how hot or cold it is outside, which in turn could trigger an updated train run schedule and target TVM Maintenance teams to efficiently to refresh blank tickets in TVMs.

Hortonworks Data Platform (HDP) is a standardized suite such as Hadoop, Spark amongst other tools, which allow for distribute processing of data whilst making the data available to end users. Hortonworks Data Flow (HDF) allows for data to be imported into HDP from a variety of sources.

Tableau Server is a business intelligence and analytics end user system, which allows personnel to easily and efficiently, connect to HDP so to visualize and understand the data being operated on.

Logs from systems are the single most important source of information about the health of the system. When the systems are not working as desired this is the first place to look to understand what maybe wrong with the system. ETS LRT Communications has employed standard syslog to standardize and unify log management.

i. Observium must also be configured to be the syslog server and parse the logs.
ii. On Linux systems syslog must be pointed to Observium as the syslog server. All application logs must be written to syslog.
iii. On Windows systems Datagram's Syslog Agent must be installed and logs pointed to Observium as the syslog server. All Windows Event Logs and logs from applications that don't leverage Windows Event Logs must be configured in the agent.
iv. All logs from the Observium syslog server must be exported to HDP using HDF.

8.11 FARES SYSTEM

The basic guidelines include the following:

i. ETS (and other affected stakeholders) will determine the fare collection strategy could include consideration for both Pay-on-boarding and Proof of Payment (POP) fare collection systems.
ii. Fare collection systems must also leverage and interface (as applicable) to any access card systems already in use within the ETS.
iii. Fare equipment (Smart Fare Vending Machines (SFVM's) and card readers/validators) will be consistent with equipment selected for the Regional Smart Fare System.
iv. Fare equipment should generally be located at stations and stops adjacent to platform access points. Placement of fare equipment will be determined on station-by-station basis, taking into account the characteristics and type of station/stop.
v. Fare equipment should be placed appropriately to avoid crowding and interference, while maintaining convenient passenger access to the equipment.
vi. Camera views of fare collection and fare paid areas are also required and are used for the purpose of ensuring the safety of customers and employees, risk mitigation related to cash handling, reliable free flowing fare collection and to detect any flow obstruction.
vii. Design must comply with Canadian Safety Codes Act to meet appropriate accessibility standards.
viii. Ticket vending equipment should be placed appropriately to avoid crowding and interference.
ix. Camera views of fare collection and fare paid areas are also required and are used for the purpose of ensuring reliable and free flowing fare collection and to detect any flow obstruction.
x. Design must comply with Canadian Safety Codes Act to meet appropriate accessibility standards.

8.12 BUILDING MANAGEMENT SYSTEM (BMS)

The BMS is equipment that is necessary for monitoring and controlling heating, ventilation and air conditioning (HVAC) equipment at LRT stations and TPSS's. The BMS is interconnected

with the security system and receives (using a dry contact) notification from the security system if a security breach has occurred.

LRT Stations, TPSS, the LRT Maintenance Facility, LRT trackswitch/snow blower control system, underground tunnels and pedways on the Edmonton LRT System are provided with various building heating, ventilating, air conditioning, plumbing, electrical, security and fire alarm systems which are all controlled and/or monitored by the BMS. Dedicated controllers within each facility or building perform all of the control and monitoring functions for the various building systems. They are remotely monitored using central operator work stations at the ETS Control Centre.

The content of this section includes: industry standard Building Management System abbreviations, definitions and nomenclature, a brief overview of the existing Building Management System and its major components, as well as, the guidelines that will govern the design of future expansion of the system.

8.12.1 BMS Definitions

The following is a list of definitions for BMS related terms used in this section.

- **Facility**; includes LRT Stations, Traction Power Substations, D.L. MacDonald LRT Maintenance Yard.
- **Traction Power Substation (TPSS)**; is a stand-a-lone building, or a designated room within a LRT Station housing the LRT Traction Power equipment.
- **Main Network**; is the BMS communication network linking all LRT Stations and Traction Power Substations.
- **Facility Network**; is the BMS communication network linking all BMS controllers within the facility.
- **Controller**; is the BMS direct digital control panel (either a main or local control panel). Operator Work Station (OWS) is a computer connected to the BMS system to allow operator access into the BMS.
- **Portable Operator Terminal**; is a laptop computer connected to the BMS system at a controller.
- **Interface**; is the communication of one proprietary building DDC system with another proprietary DDC system controlling pieces of equipment.
- **Point**; is a generic term used to describe a single point of information in a control system.

8.12.2 Nomenclature General Structure

Input/Output point names in the system must follow a designated fixed format to match to the existing system nomenclature as follows:

i. STA_SYS_POINT
ii. Where: STA = 3 character facility designator
iii. SYS = 3 character system designator
iv. POINT = specific point designator to follow standard DDC naming conventions

8.12.2.1 Facility Designator

The Facility designator for new stations must be determined in conjunction with ETS.

8.12.2.2 System Designators

System designators should coincide with existing system designator of similar systems in other existing LRT Facilities. They should fall into one of the following categories:

i. AHx Air handling systems monitoring and control where, x = the system number. (If the number of systems exceeds 9, 3 character designator to be A10, A11, A12 etc.)
ii. AIR Compressed air systems monitoring.

iii. AUD Public address systems control.
iv. BLR Boiler system monitoring and control.
v. CLG Cooling systems monitoring and control.
vi. CMO Carbon monoxide condition monitoring.
vii. ELC Electrical systems monitoring.
viii. ELV Elevator monitoring and control.
ix. ESC Escalator monitoring and control.
x. FIR Fire suppression systems monitoring and Fire alarm system monitoring.
xi. GAS Natural gas system monitoring and control.
xii. GEN Generator systems monitoring
xiii. GEX General exhaust systems monitoring and control.
xiv. GLY Glycol heating systems monitoring and control.
xv. HTG Heating systems monitoring and control.
xvi. HWx Heating water systems monitoring and control where x = system numbers.
xvii. LTG Lighting system monitoring and control.
xviii. MUx Make-up air systems monitoring and control where x = system number.
xix. OAT Outdoor air condition monitoring.
xx. SCA SCADA system alarm monitoring.
xxi. SEC Security and alarm monitoring systems including:

    a. access monitoring and control
    b. motion detector monitoring.
    c. emergency pushbutton monitoring.
    d. fare equipment alarm monitoring.

xxii. SMK Smoke control system monitoring and control.
xxiii. SMP Sump monitoring.
xxiv. SNW Track snow blower monitoring and control.
xxv. SPT Space temperature monitoring.
xxvi. UPS UPS system monitoring.

8.12.3 General Description

The existing BMS is a proprietary system supplied by Delta Controls and installed by ESC Automation of Edmonton.

Energrated Systems must be contacted to confirm existing control system firmware and hardware and to coordinate compatibility requirements between the existing and new BMS equipment. The Delta System in place at the time of the release of this edition of the LRT Design Guidelines is:

i. Delta Panels – Type DSC Series (e.g., DSC-1212e, DSC-1616e, DSC-RTR)
ii. Delta Software – OrcaView v.3.3 for independent workstations and OrcaWeb v.3.3 for generic browser clients requiring a web server.

8.12.3.1 Main Network

The Main Network consists of a dedicated VLAN that spans the entire LRT LAN network into all facilities that require BMS. This network is a dedicated network on the same Cisco infrastructure that runs all other communications systems. The network is firewalled from other ETS systems by the central core firewall and the only access allowed in from external networks is via a VPN portal and to the http ports of the main Delta web servers.

This system will likely be migrated to a VPLS service on the new MPLS core network as part of the common infrastructure environment network build. The same topology for the network will continue to exist as today.

Network switches are provided at each facility to allow for the interconnection of the individual facility network into the Main Network. These switches are part of the shared core network that runs all communications systems.

8.12.3.2 Facility Network

Each Station, TPSS building and the D.L. MacDonald LRT Maintenance Facility has its own access layer switches that branch out to all locations that contain BMS controllers.

The networks within each facility, consists mainly of copper network cabling, except where conventional copper network cabling (Cat 6) distances are exceeded. Where copper network cabling distances are exceeded, fibre optic network cabling is utilized. Industrially hardened Ethernet switches with optical fibre small form-factor pluggable (SFP) transceivers are to be used to gather copper based signals for transmission over fibre to the main station network switch.

Signal amplifying devices are not to be used to overcome cabling distance limitations of copper type network cable. Individual fibre media converters are to be avoided unless approved by ETS staff. All copper runs must also conform to BICSI/TIA standards for installation as with any Cat 6 installation described in this document.

8.12.3.3 ETS Control Centre

Monitoring is conducted on a 24/7 basis from the ETS Control Centre (refer to Section 8.6 for the Control Centre Facility Design Requirements).

The web page access to the main alarm system is accomplished via a shared ETS workstation in the control room. Separate workstations are no longer used to accomplish monitoring of the BMS system.

8.12.3.4 General Requirements

A new Direct Digital Control (DDC) Building Monitoring System is to be provided in each new facility or additions to existing buildings to monitor and control the building systems as outlined in the following subsections.

8.12.3.5 BMS Intent

Fully integrated controls must be provided to control and/or monitor facility systems and equipment as part of the overall Building Monitoring System.

8.12.3.6 System Additions

The new BMS equipment provided for any new facility will be added onto the existing BMS system by extending the existing BMS main network to the new facility and connecting the new facility network to the extended main network.

All new BMS equipment must be fully integrated into the existing BMS system.

8.12.3.7 Interfacing Requirements

The BMS interfaces with other systems to provide monitoring and control functions. The interconnection requirements, monitoring functions and control functions must be clearly specified between the respective systems.

The Systems Interface Matrix, in Appendix A, identifies the major LRT functions, by element, that are controlled centrally. It provides an overview of the required interrelationships including those with the BMS. Section 8.12 describes the specific BMS interrelationships for the various systems.

8.12.4 BMS Operation and Maintenance Manuals

Refer to Chapter 1 General, Section 1.7 for general and specific requirements on operating and maintenance data and record plans.

8.12.5 BMS Equipment Requirements

8.12.5.1 Main Network

To extend the existing Main Network fibre optic cabling to a new facility, the designers must treat the BMS panel as another Ethernet device to connect to the extended Ethernet network and cable it in the same manner as an IP-based camera, sign, or phone. A dedicated port for the BMS network must be provisioned on the network device before connecting it to the network. This must be done in coordination with ETS.

8.12.5.2 Facility Network

The facility network is simply an extension of the main network from the main communications room and is the same network used for all IP devices at all the points in the station. Each of these switches will have dedicated ports provisioned for the BMS panels at each location.

8.12.5.3 Main Control Panels

Fully distributed BMS control panels must be provided in communication, mechanical, electrical, signals and other rooms to control the relevant systems.

Controllers must be provided in all mechanical, electrical, and communication rooms.

All new controllers must be fully compatible with the existing Delta control system. Upgrading of all software and firmware for existing BMS controllers may be required in order to interface the new controllers to existing controllers. Where possible, upgrading should include all existing controllers with the overall objective of maintaining the newest software and firmware versions throughout the system.

New controllers must be fully capable of operating in standalone mode and communicating with OWS's without inter-panel functions.

Primary power supplies for all main control panels must be provided via the Facility UPS power system. The power supply should be supervised with the following features:

i. Provision of individually fused outputs.
ii. Self-contained within the respective controller or standalone within an enclosure.
iii. Proper identification.

Free standing power transformers, mounted on small 100 mm x 100 mm boxes randomly placed throughout a facility, are not acceptable.

8.12.5.4 Local Control Panels

Local control panels may be utilized in remote applications or where multiplexing of small numbers of input / output points is required in accordance with the following criteria:

i. Local control panels must not connect directly to the Facility network or the main network. They must be networked directly to a main control panel via a sub-network dedicated to one specific main control unit.
ii. Local control panels must be fully programmable controllers.
iii. All control panels must be enclosed within metal enclosures complete with lockable door latches.

The primary power supply for all local control panels is to be provided via the facility power system. Central emergency power must be utilized, if provided in the facility, as the primary

power supply for all local control panels. Individual or, central UPS power supplies, for the secondary power system to the local control panels must be provided.

8.12.5.5 Expansion Capabilities

Stand-alone controllers must accommodate 25% spare input and 25% spare output point capability for future input / output additions. Spare point capacity, through the future addition of input / output expansion boards, is acceptable.

8.12.5.6 Local, Facility and Remote Operator Work Stations

OWS's, connected to the facility network, are required where control or monitoring functions are provided in the facility.

Maintenance monitoring for LRT Stations is done by the AM&PW Buildings and Facilities Maintenance Section by connecting remotely to the BMS system through a VPN connection.

To support operations and maintenance activities, a dedicated remote desktop connection to an OWS running on the BMS network is provided.

8.12.6 Requirements for the BMS Monitoring and Control of Systems

This section outlines the monitoring and control function requirements for the various types of systems and/or equipment that may be provided in a facility or tunnel. The requirements should be applied based on the types of systems that have been selected for each facility (refer to the list in Section 8.12).

To minimize the travel distance to specific locations, sufficient control and monitoring functions must be provided for each system to adequately monitor, control and trouble shoot operational and maintenance conditions from remote locations.

As stated earlier, reference should also be made to Appendix A, System Interface Matrix, to determine their interrelationships to other systems.

8.12.6.1 Air Handling Systems Monitoring and Control (AHx)

(where, x = the system number)

All control and monitoring functions for air handling units are to be provided via the BMS, as per the following:

i. Fan control and status monitoring
ii. Coil and coil pump control

Damper control

i. Supply, return and mixed air temperature monitoring and control
ii. Filter section pressure drop monitoring
iii. Coil discharge temperature monitoring
iv. Burner controls on gas fired air handlers are not to be controlled.
v. Utilize integral burner controls c/w remote BMS temperature reset capabilities.
vi. Control all other aspects of the system where integral burner control functions are not compromised

8.12.6.2 Compressed Air Systems Monitoring (AIR)

Monitor all compressed air systems for low pressure alarms.

8.12.6.3 Public Address Control (AUD)

Interconnection of the Public Address system to the BMS is not required at this time. This integration may occur in the future depending on the capabilities and future enhancements of the platform selected.

8.12.6.4 Boiler Monitoring and Control (BLR)

Boiler systems installed for heating must be fully controlled and monitored, and include the following:

i. Boiler enable/disable and status monitoring
ii. Boiler and circulating pump control and status monitoring
iii. Boiler integral alarm monitoring
iv. Individual boiler supply water temperature monitoring
v. Common supply and return water temperature monitoring
vi. System water pressure monitoring
vii. Expansion tank low level alarm monitoring
viii. Integral boiler controls should be utilized for all gas burner control functions

8.12.6.5 Cooling Systems Monitoring and Control (CLG)

Monitoring functions for packaged air conditioners that must be provided are:

i. Space temperature
ii. Space temperature alarm
iii. Unit status
iv. Integral unit failure alarm

8.12.6.6 Carbon Monoxide Condition Monitoring (CMO)

Where conditions dictate that the monitoring of carbon monoxide (CO) levels is required, analog type CO sensors rated for the application must be provided.

Control functions for related systems in conjunction with the CO monitoring should also be provided.

8.12.6.7 Electrical Systems Monitoring (ELC)

All of the following main electrical service elements for a LRT Station must be monitored:

i. Main Service Entrance Breaker(s) Status
ii. Emergency Generator Power Breaker(s) Status
iii. Transfer Switch(s) Status
iv. Tie Breaker Status
v. Owner owned Main medium voltage (13.8 kV) Transformer High Temperature Alarms

BMS does not monitor the traction power elements such as transformers, rectifiers or circuit breakers. It does however monitor the building-related elements such as substation room temperature and fire alarm as described later. Refer to Chapter 6 Traction Power, Section 6.2.4.2 for SCADA monitoring requirements relating to the electrical systems in the TPSS.

8.12.6.8 Elevator Monitoring (ELV)

i. Elevators status.

8.12.6.9 Escalator Monitoring and Control (ESC)

i. Escalator status.

8.12.6.10 Fire Suppression Systems Monitoring (FIR)

Where dry sprinkler systems are incorporated into the facility, monitoring of the compressed air pressure for the system should be provided.

Where dedicated fire suppression systems are provided for a specific room, the BMS should monitor all general, supervisory, first, second and zone alarms at the integral alarming / release panel as separate digital inputs into the BMS.

8.12.6.11 Fire Alarm Monitoring (FIR)

i. Monitor the status of the facility fire alarm system for remote alarming at the ETS Control Centre.
ii. Monitor the general, supervisory and trouble status as separate digital inputs into the BMS.
iii. The BMS must provide a dial out signal to the LRT Control Centre.

8.12.6.12 Natural Gas Control (GAS)

Remote shut off capabilities for gas supplies to gas fired equipment heating and cooling systems at tunnel entrances, or exits must be provided.

8.12.6.13 Emergency Generator Control and Monitoring (GEN)

i. Generator operating status
ii. Generator general alarm
iii. Key transfer switch parameters
iv. Provide a 4 to 20 mA tank level controller (such as Miltronic) to monitor tank volumes and activate remote fill station alarms during the refueling process.

8.12.6.14 General Exhaust systems Monitoring and Control (GEX)

i. Operating status
ii. Dampers
iii. Space Temperature
iv. Start/stop
v. Enable/disable

Damper sections are required to be hardwired and controlled by a modulating thermostat located within the room.

8.12.6.15 Glycol Heating Systems Monitoring and Control (GLY)

i. Pump operating status and control
ii. Heat exchanger control valve control
iii. Supply and return glycol temperature monitoring
iv. Secondary control valve control
v. Glycol/water pressure monitoring
vi. Expansion tanks level monitoring
vii. Glycol fill tank level monitoring

8.12.6.16 Heating Systems Monitoring and Control (HTG)

i. Electric heat trace systems
ii. Infrared space heating systems
iii. Terminal space heaters such as unit heaters, force flows, radiation, radiant panels and radiant heaters (If requested by ETS)

BMS controls for the various terminal heating systems should include digital output control devices (enable / disable), analog output control devices (control valves) and analog input space temperature feedback.

8.12.6.17 Heating Water Systems Monitoring and Control (HWx)

i. Pump control and operating status monitoring
ii. Heat exchanger control valve control
iii. Supply and return water temperature monitoring
iv. Secondary control valve control
v. Water pressure monitoring

vi. Expansion tank level monitoring

8.12.6.18 Lighting Monitoring and Control (LTG)

i. Station signage lighting
ii. Pedway lighting
iii. Control of interior and exterior lighting control system
iv. Coordinate digital output requirements with lighting zone layouts for the facility
v. Monitor operating status for all lighting zones
vi. Interconnect to lighting control system as required

Refer to Chapter 11 Electrical Systems, Section 11.10 for lighting system requirements.

8.12.6.19 Make-up Air Monitoring and Control (Mux)

i. Make-up air systems monitoring and control (refer to Section 8.12.6.1 for details)

8.12.6.20 Outdoor Air Condition Monitoring (OAT)

Each Facility must include, at a minimum, one outdoor air temperature sensor located in a position least affected by the sun. The sensor should be utilized in conjunction with the facility monitoring and control functions.

8.12.6.21 Security and Alarm Monitoring

i. Motion Detector Monitoring. Motion detectors should be provided in the following locations:

    a. Station vaults
    b. Public washrooms
    c. All entrances to Station from street level
    d. Access areas from platform levels to concourse levels and/or +15 pedways
    e. At cash machines

Where motion detectors are provided in public areas, occupancy schedules must be provided for disabling alarm functions during occupied periods.

i. Emergency Pushbutton Monitoring

Where emergency push buttons are deemed to be a requirement in a Facility, the status of each individual push button should be monitored.

i. Fare Equipment Monitoring
ii. Fare, ticket, change, and ticket validating machines are monitored by the BMS.

All door security and access controls must be interlocked with the fire alarm systems as per ABC requirements.

All security alarming must be segregated to the ETS Control Centre LRT Security operator work stations.

8.12.6.22 Smoke Control Monitoring and Control (SMK)

i. Monitor and Control all smoke removal functions in Stations, TPSS, and Tunnels. Local control status are to be remotely controlled.

Smoke control functions are to be coordinated and integrated into the existing smoke control matrix for the LRT underground stations and tunnel systems.

8.12.6.23 Sump Monitoring (SMP)

i. Monitor for high level alarms independent of integral sump pump level controls.

8.12.6.24 Track Snow (switch) Blowers Monitoring and Control (SNW)

i. Two input monitoring points are required for each track blower. One input to monitor status of the starter (on/off) and the second input to monitor the status of the overloads.
ii. Control blower fan by the provision of digital enable output.

The BMS must be capable of remotely enabling the respective track snow blower but must not be able to remotely disable it. (Wiring at the track snow blower fan starter requires manual disabling at the respective track snow blower fan motor starter).

8.12.6.25 Space Temperature Monitoring (SPT)

i. Heating and cooling functions (monitor and control)
ii. Analog space temperature monitoring should be provided throughout the following areas of all facilities including tunnels:

    a. Common public areas of all Stations including platforms, concourses, landings and entrances
    b. Communications rooms
    c. Electrical rooms
    d. Elevator machine rooms
    e. Mechanical rooms
    f. Signals rooms
    g. Traction Power Substations

Alarm conditions are to be set at both high and low limits consistent with similar space alarm conditions in existing facilities.

8.12.6.26 UPS System Monitoring (UPS)

Monitor the following integral alarms from each UPS or battery bank via digital inputs:

i. AC power failure alarm
ii. Battery failure alarm
iii. Output failure alarm

An integrated solution may be utilized subject to the UPS being compatible to the Delta Control System.

8.12.6.27 Sensors and Devices

Upon request, ETS will provide a list of acceptable sensors and device type products.

8.12.7 Control Logic Software, Graphics and Alarming Requirements

8.12.7.1 Control Logic Software

Provision must be made for control logic sequences that incorporate all BMS monitoring and control functions for new facilities and includes any required modifications to existing control logic sequences.

Potential modifications to existing sequences include globally operated functions and schedules such as:

i. Lighting control
ii. Tunnel / Station smoke control
iii. Track snow blower control

8.12.7.2 BMS Graphics

Graphics must be provided for all BMS monitored and controlled systems. Existing graphic formats previously used in existing facilities are to be utilized for consistency.

In some instances modifications and/or additions may be required to some graphics to accommodate new facilities. Possible existing graphics requiring modifications are:

i. Station overview
ii. Track snow blower
iii. Lighting control
iv. Tunnel / Station smoke control
v. Generator monitoring
vi. UPS monitoring

8.12.7.3 BMS Alarming

All alarming is to be segregated and logged as follows:

i. Security related alarms are to be assigned to the LRT security monitoring OWS's at the Control Centre at Churchill Station with the exception of door access alarms. All door access alarms are processed by Edmonton AM&PW department's C-Cure System. The C-Cure system will report a summary intrusion alarm at stations to the BMS system via contact closure interface.
ii. All maintenance alarms will be initially assigned to ETS Security at the Control Centre. LRT Operations will then dispatch to the AMPW Maintenance OWS as required.
iii. All other alarms are to be assigned to the LRT control OWS's at the ETS Control Centre. All alarms are also to be logged at the BMS server, located in the computer room at the D.L. MacDonald LRT Maintenance Yard.

Individual alarm conditions are to be specified for the various system points in order to alert LRT personnel to alarm conditions normally expected from BMS systems being monitored and controlled. Where possible, alarm conditions in existing facilities should be utilized in new facilities on similar systems.

8.12.8 Training

Training must be provided to ETS staff for all new facilities and their related systems, including the expansion of the existing system. BMS training will be limited to BMS architecture for any new station and the control sequence strategies for new equipment.

8.12.9 Documentation

Documentation must include loop drawings.

8.13 CCTV

The CCTV system allows operations personnel and Controllers to remotely monitor and record activities at all LRT stations and other designated locations.

This section presents the guidelines and criteria to be used in the design of the Closed Circuit Television System for future LRT extensions, along with an overview of the existing system and related components.

8.13.1 Applicable Codes, Standards, Regulations and Practices

All design work, equipment and material selection must conform to or exceed the latest editions of codes, standards and regulations issued by:

i. American National Standards Institute – ANSI
ii. APTA
iii. Canadian Electrical Code (CEC)
iv. CSA Standards
v. Electrical & Electronics Manufacturers (EEMAC) Standards
vi. Electronic Industry Association – E.I.A.

vii. Transport Canada, NAV Canada
viii. Underwriters Laboratories (ULC) Inc. Standards
ix. ISEDC (Innovation, Science and Economic Development Canada) - Spectrum Management and Telecommunications Division

In the case of a conflict between standards or regulations the stricter requirement will apply.

8.13.2 Product Acceptability

As with all other systems, equipment supplied for CCTV system must be current models and cannot be **discontinued** within 1 period of 12 months from the date of commissioning acceptance by ETS Communications Group. Any product which has been discontinued by the manufacturer by the date of commissioning acceptance shall be replaced with the current model at the expense of the supplying contractor with no additional expense being incurred by ETS.

8.13.3 Naming conventions

Naming conventions for the various systems and system components are described in the released document “Naming Conventions Best Common Practice, Issue 1.0”, dated January 2016.

8.13.4 Architecture

The CCTV system is currently comprised of both legacy systems, which are in the process of being upgraded, and the current standard Video Management System, Genetec Security Center (v5.4/SR3/CU1 at time of writing). All system additions or modifications are to be done as expansion of the Genetec Security Center architecture; no alternate video systems or platforms are to be introduced.

The Genetec Security Center (GSC) system is constructed based on a “Failover / Redundant Centralized” system model. The GSC system is comprised of a fully redundant Directory set, the primary Management servers for the USP system, along with a number of Archivers (Video recording servers) configured for redundant recording. These servers, which are all virtual, are hosted on physical stacks located within 2 server rooms, one located at the DLM site and the other at USR. In addition, there are several sites with on-site recording servers (Archivers) due to limited WAN bandwidth availability at the time of their deployment; these will be migrated to the centralized storage servers once the WAN bandwidth is increased.

Cameras, encoders, Input / Output Modules (Alarm Units), and Client Workstations located throughout ETS facilities are all connected to the “CCTV” network via local switches connected to the ETS Fibre network backbone. This network is used to connect all field devices with the Genetec Servers (Directories and Archivers) for transport of video and other data.

In addition to the Genetec Security Center VMS, ETS utilizes a centralized device management platform for all CCTV field devices, such as cameras, encoders & Input / Output Modules. This software allows an interface through which device status can be verified, firmware updates can be applied and global programming configuration changes can be deployed. This management software is provided by the hardware manufacturer and does not allow for devices from disparate manufacturers. ETS has standardized on the use of Axis Communications for all cameras, video encoders and input / output modules.

8.13.4.1 Video Encoders/Alarm Interface Units (for use with Analog Cameras)

The future expansion of the CCTV system will be interfaced to a centrally located enterprise network switch. The enterprise switch connects to PC based NVR’s and video workstations.

In order to migrate from the legacy analogue CCTV systems which were in place to the Genetec Security Center VMS, ETS has employed the use of Analogue Video Encoders. These encoders receive analogue video signals and digitize them, converting them to IP video streams which can then be handled by the VMS. Current specifications (as of August 2016) are based on Axis Q74XX Series of encoders.

Any new camera deployment or system expansion will be done utilizing IP cameras. Video Encoders are to be used only in the event that a site containing pre-existing analogue cameras is to be added to the USP system.

Network Input / Output Audio Modules (aka Alarm Units), are used to provide an interface between external dry contact “alarm points” and the USP system. No Alarm-point connections are to be physically made directly to cameras or encoders, these must be connected to Network I/Output Audio Module devices. Current specifications (as of August 2016) are based on the Axis P8221.

8.13.4.1.1 Modular Video Encoders (Self-Contained)

Additional encoders must be capable of network connection and communication providing for peer to peer communication. These modular encoders shall:

i. Be manufactured with an all metal casing
ii. Be equipped with a 100Base-T or 1000BASE-T (Gigabit) Ethernet interface
iii. Be equipped with either 1 or 4 analogue composite video inputs
iv. For each channel provide at least 3 streams of resolutions up to 720x480 (NTSC) pixels at 30 frames per second per stream (up to 60 frames per second on single-channel encoders)
v. Support simultaneous individually configured Motion JPEG and H.264 video streams for each channel
vi. Support both unicast and multicast H.264 with support for both Constant and Variable Bit Rate
vii. Include de-interlacing functionality
viii. For each channel accept static IP addresses as well as addresses provided by a DHCP
ix. Support both IPv4 and IPv6 based addresses
x. Be equipped with RS422/485 ports per video channel providing the ability to control third part PTZ and dome cameras with support for guard tour and at least 100 presets
xi. Provide the ability to control PTZ devices from third party manufacturer using either RS-422/RS-485 or up-the-coax control. (Up-the-coax on single-channel encoder only)
xii. Provide multiple user password levels, support for HTTPS and SSL/TLS and incorporate IEEE 802.1X authentication for each channel
xiii. Include embedded event functionality, which may be triggered by:

    a. alarm input
    b. video loss
    c. video motion detection
    d. camera tampering

xiv. Event actions supported by the encoder shall include remote notification, including video upload
xv. Be equipped with a built-in web server for each channel
xvi. Be supported by an open and published API

8.13.4.1.2 Chassis-mount Video Encoders Blades

Chassis-mount encoder blades shall:

i. Meet the following standards:

    a. IEEE 802.1X (Authentication)

b. IPv4 (RFC 791)
c. IPv6 (RFC 2460)
d. QoS – DiffServ (RFC 2475)

ii. Be designed for installation in a separate 19” chassis
iii. Contain different embedded de-interlacing filters in order to improve the video stream image.
iv. Incorporate Anti-aliasing functionality to minimize distortion in the image.
v. Incorporate Local Contrast functionality to apply contrast in a specified area of the image.
vi. Support manually defined values for:

a. Color level
b. Brightness
c. Contrast
d. Sharpness

vii. Allow for rotation of the image.
viii. Provide simultaneous Motion JPEG and H.264 video streams.
ix. For each channel, be designed to provide at least two individually configured simultaneous video streams at 60 frames per second in all resolutions up to 720x480 pixels in Motion JPEG and H.264
x. Include both unicast and multicast functionality and support Constant Bit Rate (CBR) as well as Variable Bit Rate (VBR) for H.264 implementation.
xi. Be equipped with six BNC connectors for analogue composite video input.
xii. Through the chassis, using the multi-pin connectors, provide:

a. RS-485/422 serial ports
b. I/O functionality, configurable as digital (alarm) inputs or digital outputs. These inputs/outputs shall be configurable to respond to normally open (NO) or normally closed (NC) dry contacts.
c. Network connectivity
d. Power

xiii. Provide the ability to control PTZ devices from third party manufacturer using either RS-422/RS-485 or up-the-coax control.
xiv. Provide 100 preset positions/camera.
xv. Provide a guard tour functionality
xvi. Be equipped with an integrated event functionality, which can be trigged by:

a. Live Stream Accessed
b. Video Motion Detection
c. Tampering
d. Video signal
e. Manual Trigger/Virtual Inputs
f. PTZ functionality
g. Embedded third party applications

xvii. Support the following responses to a trigged event:

a. Send notification, using HTTP, HTTPS, TCP or email
b. Send images, using FTP, HTTP, HTTPS, network share or email
c. Send video clip, using FTP, HTTP, HTTPS, network share or email

xviii. PTZ control functionality
xix. Be equipped with a built-in web server for each channel
xx. Be supported by an open and published API

8.13.4.1.3 Network I/O Audio Modules

Input / Output Modules Shall:

i. Be manufactured with an all metal casing
ii. Be equipped with a 100BASE-TX Ethernet interface
iii. Be equipped with 8 configurable I/O ports
iv. Support -40 V DC to + 40 V DC signals when configured as input
v. Supporting open-drain, max load 40mA, max voltage 40 V DC when configured as output
vi. Provide 1 channel of full duplex audio and be equipped with Line/Mic In and Line Out
vii. Support the use of 48 V phantom powered balanced microphones
viii. Accept static IP addresses as well as addresses provided by a DHCP
ix. Support both IPv4 and IPv6 based addresses
x. Provide one channel of serial communication for third party equipment using RS-232 or 422/485
xi. Provide date/time support synchronized with an NTP
xii. Provide user password, support for HTTPS and SSL/TLS and incorporate IEEE 802.1X authentication
xiii. Be equipped with a built-in web server
xiv. Be supported by an open and published API

8.13.4.2 Unified Security Platform

The Unified Security Platform (UPS) of which the CCTV USP is a component shall be of the same release and patch level as ETS main system at the time of system deployment. The USP shall support the following minimum requirements:

8.13.4.2.1 System Functionality

i. Failover and Standby Functionality
ii. The USP shall support native and off-the-shelf failover options.
iii. Failover Directory
    a. The Standby Directory shall act as a replacement SSM on hot standby, ready to take over as the acting Directory in case the primary Directory fails. The failover shall occur in less than 1 minute. No action from the user shall be required.
    b. The USP shall support up to five (5) Directories on standby, lined up to take over as the acting Directory in a cascading fashion.
    c. The Standby Directory shall keep its configuration database synchronized with the primary Directory.
    d. The Standby Directory shall support synchronization of the configuration databases using a backup and restore mechanism. The synchronization period shall be configurable from 15 minutes to 1 week.
    e. The Standby Directory shall support real-time synchronization of the configuration databases using SQL Mirroring mechanism.
iv. Standby Archiver. Refer to section 8.13.4.3.4 Standby Archiver for more information.

8.13.4.2.2 Remote Task

i. The USP shall provide, through a Remote Task, capabilities to remotely monitor and control the content of other workstations running the CSA (Monitoring UI) that are part of the same system.
ii. The USP shall support video wall applications by connecting and controlling multiple workstations and monitors simultaneously.
iii. The Remote Task shall be a graphical interface showing a replication of the remote workstation running the CSA (Monitoring UI).
iv. The Remote Task shall allow the connection to other workstations using a low bandwidth mode to receive only snapshots of video viewed remotely.

v. The Remote Task shall allow the connection to other workstations using a spy mode to remain invisible to the remotely connected workstation.
vi. The functionality provided by the remote monitoring and control capability shall include:

   a. Remote monitoring and control of the monitoring and alarm monitoring tasks.
   b. Ability to remotely switch cameras, doors and zones into display tiles.
   c. Ability to remotely control live and playback video.
   d. Ability to remotely change the tile pattern.
   e. Ability to remotely create and delete tasks.
   f. Ability to remotely start/stop task cycling.
   g. Ability to remotely go into full screen mode.
   h. Ability to remotely save and reload the workspace.

8.13.4.2.3 Health Monitoring

i. The USP shall monitor the health of the system, log health-related events, and calculate statistics.
ii. USP services, roles, agents, units, and client apps will trigger health events.
iii. The USP shall populate the Windows Event Log with health events related to USP roles, services, and client apps.
iv. A dedicated role, the Health Monitoring Role, shall perform the following actions:

   a. Monitor the health of the entire system and log events.
   b. Calculate statistics within a specified time frame (hours, days, months).
   c. Calculate availability for clients, servers, and video/access/ALPR units.

v. A Health Monitoring task and Health History reporting task shall be available for live and historical reporting.
vi. A web-based, centralized health dashboard shall be available to remotely view unit and role health events of the USP.
vii. Detailed system care statistics will be available through a web-based dashboard providing health metrics of USP entities and roles, including Uptime and mean-time-between-failures.
viii. Health events shall be accessible via the SDK (can be used to create SNMP traps).

8.13.4.2.4 Advanced Task Management

i. The USP shall support an infrastructure for managing Monitoring UI tasks used for live monitoring, day to day activities, and reporting.
ii. Administrators shall be able to assign tasks and lock the operator`s workspace. The user management of their workspace shall be limited by their assigned privileges.
iii. Operators shall be able save their tasks as either Public Tasks or Private Tasks and in a specific partition. Public tasks shall be available to all users. Private tasks shall only be available to the owner of the task.
iv. Operators shall be able to share their tasks by sending them to one or more online users. Recipients shall have the option to accept the sent task.

8.13.4.2.5 Microsoft Active Directory Integration

i. The USP shall support a direct connection to one or multiple Microsoft Active Directory servers via the Active Directory Role(s). Active Directory integration shall enable the synchronization of information from the Active Directory server to the USP.
ii. Active Directory integration shall permit the central management of the USP users, user groups, cardholders, and cardholder groups.
iii. The USP shall be able to connect to and synchronize data from multiple Active Directory servers (up to 10).
iv. The USP shall support Microsoft Active Directory encryption using LDAP SSL.

v. When enabled, Active Directory shall manage user logon to the USP client applications through the user's Windows credentials. Logging to the USP shall utilize native Active Directory password management and authentication features.
vi. It shall be possible to synchronize the following USP entities and their information from Active Directory with the USP:

   a. Users (username, first and last names, email address, and more).
   b. User groups (user group name, description, and group email address).
   c. Active Directory attributes to USP custom fields.

vii. When enabled, the addition, removal, or suspension of a user's Windows account in Active Directory shall result in the creation, deletion, or disabling of the equivalent user account in the USP.
viii. Supported synchronization methods for additions, modification, and deletions of synchronized entities shall include: on first logon (users only), manual synchronization, and scheduled synchronization.
ix. The USP shall support user connections across independent organizations by connecting to an external ADFS (Active Directory Federation Services) service using claims-based authentication.

8.13.4.2.6 Zone Management

i. The USP shall support the configuration and management of zones for input point monitoring via the Zone Manager Role. A user shall be able to add, delete, or modify a zone if he or she has the appropriate privileges.
ii. A zone shall monitor the status of one or more inputs points. Zone monitoring or input point monitoring shall be possible through the use of a controller and one or more input modules. Inputs from video cameras or video encoders shall also be accessible via a zone.
iii. Depending on the hardware installed, supervised inputs shall be supported. Depending on the input module used, both 3-state and 4-state supervision shall be available.
iv. A schedule shall be defined for a zone indicating when the zone will be monitored.
v. Custom Events shall provide full flexibility in creating custom events tailored to a zone. Users shall be able to associate custom events to state changes in monitored inputs.
vi. The ACS shall support one or more cameras per zone. Video shall then be associated to zone state changes.
vii. Input / Output (IO) Linking:

   a. Zone management shall support Input / Output (IO) Linking. IO Linking shall allow one or more inputs to trigger one or more outputs.
   b. IO Linking shall be available in offline mode when communication between the server and hardware is not available.
   c. Custom Output Behaviors shall provide full flexibility in creating a variety of complex output signal patterns: simple pulses, periodic pulses, variable duty-cycle pulses, and state changes.
   d. Through the "trigger an output" action, the ACS shall support the triggering of outputs with custom output behaviors

8.13.4.2.7 User and User Group Security, Partitions and Privileges Management

i. The USP shall support the configuration and management of users and user groups. A user shall be able to add, delete, or modify a user or user group if he or she has the appropriate privileges.
ii. The USP shall support user authentication with claims-based authentication using external providers. External providers shall include:

   a. ADFS (Active Directory Federation Services)

b. Common access rights and privileges shared by multiple users shall be defined as User Groups. Individual group members shall inherit the rights and privileges from their parent user groups. User group nesting shall be allowed.

iii. User privileges shall be extensive in the USP. All configurable entities for the USP, including access control/video/ALPR, shall have associated privileges.
iv. Specific entities, such as cardholders, cardholder groups, and credentials shall include a more granular set of privileges, such as the right to access custom fields and change the activation or profile status of an entity.
v. Partitions:

a. The USP shall limit what users can view in the configuration database via security partitions (database segments). The administrator, who has all rights and privileges, shall be allowed to segment a system into multiple security partitions.
b. All entities that are part of the USP can be assigned to one or more partitions.
c. A user who is given access to a specific partition shall only be able to view entities (components) within the partition to which he or she has been assigned. Access is given by assigning the user as an accepted user to view the entities that are members of a particular partition.
d. A user or user group can be assigned administrator rights over the partition.

vi. It shall be possible to specify user and user group privileges on a per partition basis.
vii. Advanced logon options shall be available such as dual logon and more.
viii. It shall be possible to specify an inactive period for the Monitoring UI after which time the application shall automatically lock, while still preserving access to currently displayed camera feeds.

8.13.4.2.8 Event / Action Management

i. The USP shall support the configuration and management of events for access control, video, and ALPR. A user shall be able to add, delete, or modify an action tied to an event if he has the appropriate privileges.
ii. The USP shall receive all incoming events from one or more ACS and/or VMS. The USP shall take the appropriate actions based on user-define event/action relationships.
iii. The USP shall receive and log the following events:

a. System-wide events.
b. Application events (clients and servers).
c. Area, camera.
d. Unit events.
e. Zone events.
f. Alarm events.

iv. The USP shall allow the creation of custom events.
v. The USP shall have the capability to execute an action in response to an access control, video, and ALPR event.
vi. The USP shall allow a schedule to be associated with an action. The action shall be executed only if it is an appropriate action for the current time period.

8.13.4.2.9 Schedules and Scheduled Task

i. Schedules

a. The USP shall support the configuration and management of complex schedules. A user shall be able to add, delete, or modify a schedule if he or she has the appropriate privileges.
b. The USP shall provide full flexibility and granularity in creating a schedule. The user shall be able to define a schedule in 1-minute or 15-minute increments.
c. Daily, weekly, ordinal, and specific schedules shall be supported

ii. Scheduled Tasks

a. The USP shall support scheduled tasks for access control, video, and ALPR.
b. Scheduled tasks shall be executed on a user-defined schedule at a specific day and time. Recurring or periodic scheduled tasks shall also be supported.
c. Scheduled tasks shall support all standard actions available within the USP, such as sending an email or emailing a report.

8.13.4.2.10 Dynamic Graphical Maps

i. The USP shall support mapping functionality for access control, video surveillance, intrusion detection, ALPR, and external applications.
ii. The USP shall provide a map centric interface with the ability to command and control all the UPS capabilities from a full screen map interface.
iii. It shall be possible to span the map over all screens of the USP client station. In the scenario where the map is spanned over all the screens of the USP client station it shall be possible to navigate the map including pan and zoom, and the map's moves shall be synchronized between all screens. Spanning the map over multiple screen must provide the same command and control capabilities than in a single screen display.
iv. The DGM shall support the following file format and protocol for importing map background:

a. PDF
b. JPG
c. PNG
d. Web Map Service (WMS) defined by the Open Geospatial Consortium (OGC)
e. BeNomad

v. The DGM shall provide the following online map providers for use as map background and provide the ability to manage their service license if they require one:

a. Google Map, aerial, terrain (Licensed)
b. Bing Map, aerial, satellite, hybrid (Licensed)
c. OpenStreet Map aerial
d. OVI hybrid

vi. It shall be possible to configure a mixed set of maps made of GIS, online providers and private imported files and link them together.
vii. The DGM shall provide the ability to display all native entities of the UPS including:

a. Cameras, fix and PTZ.
b. Camera sequences.
c. Areas.
d. Digital inputs.
e. Digital outputs.
f. Intercoms.
g. Alarms.

viii. The DGM shall provide the ability to draw and display information over the map in the form of:

a. Vector shapes: line, rectangles, polygons, ellipse.
b. Pictures.
c. Text.

ix. The DGM shall provide the ability to display any type of third party entities integrated through an SDK.
x. The DGM shall provide the ability to display layer of information in Keyhole Markup Language (KML) format.

xi. The DGM shall provide the ability to the operator to manage layers of entities display over the map, being able to turn them on and off and changing the superposition order.
xii. The DGM shall offer built-in map data backup and restore for both map background and layers of entities.
xiii. The DGM shall offer failover capabilities.
xiv. The DGM shall scale up to several thousands of entities on a single map and hundreds of maps.
xv. The DGM shall provide a means to update a map background without affecting the map object configuration.
xvi. The DGM shall offer a user friendly graphical map designer to configure the maps.
xvii. The DGM shall provide a user friendly and intuitive navigation that includes:

a. The ability to create hierarchies of maps to facilitate navigation within and between various sites and buildings.
b. The ability to define favorites for recurrent position recall.
c. The possibility to create links between maps. The map links shall allow the link from one map to multiple map representing the floors of a building.
d. A common user experience regarding navigation into the map for both GIS or private maps.
e. A history log of positions.

xviii. It shall be possible to monitor the state of entities on the map. It shall be possible to customize the icon of any entities represented on the map.
xix. The DGM shall display the actual video Field of View of camera. It shall be possible to configure the FOV of a camera by entering the specification of the camera installation or graphically by moving the boundaries of the Field of View.
xx. For PTZ cameras offering position feedback capability, the DGM shall:

a. Dynamically represent the accurate Field of View of the camera.
b. Allow the user to act on the PTZ by moving its field of view.

xxi. The DGM shall offer the ability to optionally set a graphical display notification of the motion detection
xxii. The DGM shall offer a smart selection tool to access the video simply by clicking the location the user wants to see, the DGM will automatically select the cameras that can see this location and move the PTZ towards that location. This smart selection tool shall take into consideration the obstacle and not display cameras that cannot see the location because of a wall.
xxiii. It shall be possible to select a location by drawing a zone of interest on the DGM and display all the entities that are part of that zone of interest at once.
xxiv. The user shall be able to select and display the content of multiple USP entities on the map in popup windows.
xxv. It shall be possible to access live and playback video from the map.
xxvi. It shall be possible to monitor from the DGM all entities event notification. User shall be able to turn on and off the notification per entity.
xxvii. The DGM shall offer the ability to fully operate alarm monitoring. It shall be possible to:

a. Center the map on entities related to the alarm.
b. Visualize the Alarms notification on the map access the related video from the map
c. Trigger and receive alarms.
d. Act on the alarm from the DGM, including acknowledgements, forwarding, and investigation.
e. Visualize that an alarm occurred in an underlying linked map.

xxviii. The DGM shall provide the following search capabilities:

a. Search and center by entity name.

b. From the Display of an entity in the USP locate the entity on the map and offer the ability to select another one close-by.

xxix. Any update of map content by an administrator shall be immediately and dynamically pushed to all DGM users.

8.13.4.2.11 Audit and User Activity Trails (Logs)

i. The USP shall support the generation of audit trails. Audit trails shall consist of logs of operator/administrator additions, deletions, and modifications.
ii. Audit trails shall be generated as reports. They shall be able to track changes made within specific time periods. Querying on specific users, changes, affected entities, and time periods shall also be possible.
iii. For entity configuration changes, the audit trail report shall include detailed information of the value before and after the changes.
iv. The USP shall support the generation of user activity trails. User activity trails shall consist of logs of operator activity on the USP such as login, camera viewed, badge printing, video export, and more.
v. The ACS shall support the following actions on an audit and activity trail report: print report and export report to a PDF/ Microsoft Excel/CSV file.

8.13.4.3 CCTV Control - Video Management System (VMS) Software

The CCTV USP is a component of Genetec Security Center bundled under the license name Omnicast. The USP shall support the following minimum requirements:

8.13.4.3.1 General Functionality

i. The USP shall be based on a true open architecture that shall allow the use of non-proprietary workstation and server hardware, non-proprietary network infrastructure and non-proprietary storage.
ii. The USP shall offer a complete and scalable video surveillance solution that shall allow cameras to be added on a unit-by-unit basis.
iii. The USP shall interface with analogue-to-digital video encoders and IP cameras and with digital-to-analogue video decoders, hereafter referred to as digital video servers (DVS). The USP shall support DVS from various manufacturers.
iv. The USP shall integrate DVS using the DVS native SDK / Extension
v. All video streams supplied from analogue cameras or IP cameras shall be digitally encoded in MJPEG, H.264, H.265, compression formats and recorded simultaneously in real time.
vi. All audio streams supplied from IP video servers shall be digitally encoded in g711 (u-law), g721, g723, or AAC compression formats and recorded simultaneously in real time.
vii. Each camera's bit rate, frame rate, and resolution shall be set independently from other cameras in the system, and altering these settings shall not affect the recording and display settings of other cameras.
viii. The USP shall be able to use multiple CCTV keyboards to operate the entire set of cameras throughout the system, including brands of cameras from various manufacturer and including their PTZ functionalities (i.e.: Pelco keyboard controls Panasonic dome or vice-versa).
ix. The USP shall be able to retrieve and set the current position of PTZ cameras using XYZ coordinates.
x. The USP shall support PTZ camera protocols from multiple manufacturers, including analogue and IP protocols.
xi. The USP shall arbitrate the user conflict on PTZ usage based on user levels per camera
xii. The USP shall support the following list of CCTV keyboard protocols:

a. American Dynamics 2078 ASCII and American Dynamics 2088 ASCII.
b. Bosch Autodome, Bosch Intuikey.

c. DVTel.
d. GE ImpactNet.
e. Panasonic, Pelco ASCII, Pelco KBD-300, and Pelco P.
f. Radionics.
g. Samsung SSC-1000.
h. Videolarm.

xiii. The USP shall support the following list of joysticks and control keyboards:

a. Axis 295.
b. Axis T8310 Video Surveillance Control Board.
c. Panasonic WV-CU950 Ethernet keyboard.
d. Any USB joystick detected as a Windows Game Controller.

xiv. The USP shall allow for the configuration of a time zone for each camera connected to a DVS. For playback review, users shall have the ability to search for video based on the following options:

a. Local time of the camera.
b. Local time of the SSM.
c. Local time of the user's workstation.
d. GMT Time.
e. Other time zone.

xv. Audio and Video storage configuration for the SSM shall either be:

a. Internal or external IDE/SATA/SAS organized or not in a RAID configuration;
b. Internal or external SCSI/iSCSI/Fibre Channel organized or not in a RAID configuration;
c. Within the overall storage system, it shall be possible to include disks located on:

1. External PCs on a LAN or WAN.
2. Network Attached Servers (NAS) on a LAN or WAN.
3. Storage Area Networks (SAN).

xvi. The SSM shall not limit the actual storage capacity configured per server.

8.13.4.3.2 Configuration UI

i. The Configuration UI shall allow the administrator or users with appropriate privileges to change video configuration.
ii. The Configuration UI shall provide the ability to change video quality, bandwidth, and frame rate parameters on a per camera (stream) basis for both live and recorded video.
iii. The Configuration UI shall provide the ability to change video quality by a selection of predefined video quality template.
iv. The Configuration UI shall provide the ability to configure brightness, contrast, and hue settings for each camera on the same DVS.
v. The Configuration UI shall provide the capability to enable audio recording on DVS units that support audio.
vi. The Configuration UI shall provide the ability to change the audio parameters, serial port and I/O configuration of individual DVS units.
vii. The Configuration UI shall provide the capability to rename all DVS units based on system topology and to add descriptive information to each DVS.
viii. The Configuration UI shall provide the ability to set recording schedules and modes for each individual camera. The recording mode can be:

a. Continuous.
b. On motion and Manual.
c. Manual only.
d. Disabled.

ix. The Configuration UI shall support the creation of schedules to which any of the following functional aspects can be attached:

   a. Video quality (for each video stream per camera).
   b. Recording (for each camera).
   c. Motion detection (for each detection zone per camera).
   d. Brightness, Contrast, and Hue (for each camera).
   e. Camera sequence execution.

x. The Configuration UI shall support the creation of unlimited recording schedules and the assigning of any camera to any schedule.
xi. The Configuration UI shall detect and warn user of any conflict within assigned schedules.
xii. The Configuration UI shall provide the capability to set a PTZ protocol to a specific DVS serial port and shall allow mixing domes of various manufacturers within a system.
xiii. User shall have the ability to configure a return to home function after a predefined period of inactivity for PTZ cameras. This period of inactivity time shall be configurable from 1 to 7200 seconds.

8.13.4.3.3 Archiving

i. The Archiver (role) shall use an event and timestamp database for the advanced search of audio/video archives. This database shall use Microsoft SQL.
ii. The Archiver shall protect archived audio/video files and the system database against network access and non-administrative user access.
iii. The Archiver shall digitally sign recorded video using 248-bit RSA public/private key cryptography.
iv. The Archiver shall offer a plug and play type hardware discovery service with the following functionalities:

   a. Automatically discover DVS units as they are attached to the network.
   b. Discover DVS units on different network segments, including the Internet, and across routers with or without network address translation (NAT) capabilities.

v. The Archiver shall have the capacity to configure the key frame interval (I-frame) in seconds or number of frames.
vi. The Archiver shall provide a pre-alarm and post-alarm recording option that can be set between one second and 5 minutes on a per camera basis.
vii. The Archiver shall provide the functionality of storing of video and audio streams based on triggering events, such as:

   a. Digital motion detection.
   b. Digital input activation.
   c. Macros.
   d. Through SDK application recording.

viii. The Archiver shall perform video motion detection on each individual camera based on a grid of 1320 motion detection blocks. All of the video motion detection settings are configurable on schedule. A global sensitivity threshold is available to reduce motion detection sensitivity when the video signal is noisy or when a lot of false hits are incurred. Video motion detection itself can be set into four different modes:

   a. Full Screen: All 1320 blocks on screen are activated, and a general threshold for the overall motion in the entire image can be set and, when it is reached, it can trigger recording and a motion event or a custom event.
   b. Full Screen Unit: This is the same as the Full Screen, but the motion detection takes place in the DVS.
   c. Detection Zone: Six overlapping zones can be defined in the 1320 blocks on screen with each of these zones having its own threshold, and, when that threshold is

reached, each one of them can trigger recording and a motion event or a custom event. Each zone triggering its own event allows for the configuration of directional motion detection events and other complex motion detection logic.

d. Detection Zone Unit: This is the same as the Detection Zone, but the motion detection takes place in the DVS and only one zone is supported.
e. Disabled: No motion detection is performed on this camera.

ix. The Archiver shall be able to detect motion in video within 200 milliseconds and not only on key frames.

x. The Archiver shall allow for multiple recording schedules to be assigned to a single camera. Each schedule shall be created with the following parameters:

a. Recording mode:

1. Continuous.
2. On Motion/Manual.
3. Manual.
4. Disabled.

b. Recurrence pattern:

1. Once on specific days.
2. Specific days on a yearly basis.
3. Specific days on a monthly basis.
4. Specific days on a weekly basis.
5. Daily.

xi. Time coverage:

a. All day.
b. Specific time range(s).
c. Daytime or nighttime based on the times of sunrise and sunset that are automatically calculated from the time of year and a geographical location. Provision shall be given to offset the calculated sunrise or sunset time by plus or minus 3 hours.

xii. The Archiver shall allow each camera (video source) to be encoded multiple times in the same or different video formats (MJPEG, H.264, H.265), limited only by the capabilities of each DVS.

xiii. Whenever multiple video streams are available from the same camera, users shall be free to use any one of them based on their assigned usage. The standard video stream usages are:

a. Live.
b. Recording.
c. Remote.
d. Low resolution.
e. High resolution.

xiv. The Archiver shall allow the video quality to vary according to predefined schedules. Such schedules shall have the same configuration flexibility as the recording schedules mentioned earlier. The video quality shall be based on, but not limited to, the following parameters:

a. Maximum bit rate.
b. Maximum frame rate.
c. Image quality.
d. Key frame interval.

xv. The Archiver shall have the ability to dynamically boost the quality of the "recording stream" (see previous bullet) based on specific events:

   a. When recording is started manually by a user.
   b. When recording is triggered by a macro, an alarm or detected motion.

xvi. The Archiver shall have the capacity to communicate with the DVS using 128 bits SSL encryption.
xvii. The Archiver shall have the capacity to communicate with the DVS using HTTPS secure protocol.
xviii. The Archiver shall have the capacity to receive multicast UDP streams directly from the DVS.
xix. For network topologies that restrict the DVS from sending multicast UDP streams, the Archiver shall redirect audio/video streams to active viewing clients on the network using multicast UDP.
xx. The Archiver shall have the capacity to redirect audio/video streams to active viewing clients on the network using unicast UDP or TCP.
xxi. The Archiver shall empower the administrator with a full range of disk management options:

   a. The Archiver shall allow the administrator to choose which disks to use for archiving and to set a maximum quota for each.
   b. The Archiver shall allow the administrator to spread the archiving of different cameras on different disk groups (groups of disks controlled by the same controller) so that archiving could be carried out in parallel on multiple disks.

xxii. The Archiver shall have the capacity to move video archives to the Azure Cloud. The archives will be moved after a preset number of days.
xxiii. The Archiver shall offer the following options to clean up old archives, on a camera by camera basis:

   a. After a preset number of days.
   b. Deleting oldest archives first when disks run out of space.
   c. Stop archiving when disks are full.

xxiv. The Archiver shall allow important video sequences to be protected against normal disk cleanup routines.
xxv. Users shall have the following options when protecting a video sequence:

   a. Until a specified date.
   b. For a specified number of days.
   c. Indefinitely (until the protection is explicitly removed).

xxvi. The Archiver shall allow the administrator to put a cap on the percentage of storage space occupied by protected video.
xxvii. The Archiver shall keep a log and compile statistics on disk space usage.
xxviii. The statistics shall be available by disk group or for the whole Archiver.
xxix. The statistics shall show the percentage of protected video over the total used disk space.
xxx. The Archiver shall have the capacity to down-sample video streams for storage saving purposes. The down-sampling options available are the following:

   a. For H.264, MPEG-4, H.265, streams the down-sampling options are: all key frames, 1 fps, 2 sec/frame, 5 sec/frame, 10 sec/frame, 15 sec/frame, 30 sec/frame. 60 sec/frame 120 sec/frame.
   b. For MJPEG streams the down-sampling options are: 15 fps, 10 fps, 5 fps, 2 fps, 1 fps, 2 sec/frame, 5 sec/frame, 10 sec/frame, 15 sec/frame, 30 sec/frame, 60 sec/frame 120 sec/frame.

xxxi. The Archiver shall support DVS with edge recording capabilities and offer the following capacities:

a. The ability to playback the video recorded on the DVS at different speeds.
b. The ability to offload (video trickling) the video recorded on the DVS on schedule, on event, or manually to store it on the Archiver.
c. It shall be possible to filter the video that is being offloaded using one or multiple of the following filters:

1. Time interval.
2. Playback request.
3. Video analytic events.
4. Motion events.
5. Bookmarks.
6. Alarms.
7. Input pin events.
8. Unit offline events.

xxxii. The Archiver shall be provided with proven performance and scalability figures:

a. The Archiver's performance shall be guaranteed during the rebuild of a disk from a raid 5 disk group. The rebuild process shall not affect the recording and playback capabilities.
b. The recommended server specification from the Genetec Security Center Hardware Requirement shall allow Archiver to perform up to 300 cameras or 300Mbs throughput first limit reached.
c. The high-performance archiver specification from the Genetec Security Center Hardware Requirement shall allow Archiver to perform:

1. Up to 500 cameras or 500Mbs throughput first limit reached with a 1Gbs NIC.
2. Up to 700 cameras or 1300Mbs throughput first limit reached with a 10Gbs NIC.

xxxiii. The Archiver shall provide the ability to encrypt the media stream coming from the DVS including the video, audio and metadata.

a. Media encryption shall be optional and can be activated on a per DVS basis.
b. Media encryption shall be performed with AES-128.
c. Media encryption shall encrypt all video, audio and metadata at rest and in transit. Once media encryption is turned on for a DVS all media stored or redirected by the Archiver shall be encrypted and shall require the private key to be decoded.
d. It shall be possible to export the encrypted media into a non-encrypted ASF file.

8.13.4.3.4 Standby / Redundant Archiver

i. The Standby Archiver shall act as a replacement Archiver role on hot standby, ready to take over the functions of the primary Archiver role. The failover will occur in less than 1 minute. No action from the user will be required.
ii. The Standby Archiver assigned to an Archiver role entity shall automatically provide protection for all DVS connected to that Archiver role.
iii. The Standby Archiver shall protect the primary Archiver role against the following failures:

a. Server failure (hardware or software)
b. Storage failure, such as Archiver Role detects that it cannot read or write to any of its allocated disks.

iv. Each Archiver role shall have priority value if multiple Archiver Roles fail at the same time on the same standby server.
v. It shall be possible for any Archiver role in the system to be designated as another's standby and vice-versa.

vi. The Standby Archiver shall have the ability to act as a Redundant Archiver.
vii. The Redundant Archiver shall maintain an exact copy of everything recorded by the default Archiver, i.e. audio/video archives, events, and bookmarks.
viii. Redundancy shall be configured on a camera by camera basis.
ix. The Redundant Archiver shall have to ability to use a multicast video stream from the DVS and shall not require an additional connection to any DVS.

8.13.4.3.5 Media Streaming

i. The Media Router Role shall be responsible for routing video and audio streams across local and wide area networks from the source (e.g. DVS) to the destination (e.g. CSA).
ii. The Media Router Role shall support multiple transport protocols, such as unicast TCP, unicast UDP, and multicast UDP.
iii. The Media Router shall support IGMP (Internet Group Management Protocol) to establish multicast group memberships:
iv. IGMP v3, including SSM (Source-Specific Multicast) shall be supported.
v. The Media Router Role using Redirector Agents shall be responsible for redirecting a stream from a source IP endpoint to a destination IP endpoint.

    a. The Redirector Agents shall be capable of converting a stream from and to any supported transport protocols:
    b. Multicast UDP to Unicast TCP.
    c. Multicast UDP to Unicast UDP.
    d. Unicast TCP to Multicast UDP.
    e. Unicast UDP to Multicast UDP.

vi. It shall be possible to limit the number of concurrent live and playback video redirections for each Redirector Agent in order to better control the bandwidth across multiple sites.
vii. It shall be possible to protect the Media Router Role against hardware or software unavailability by configuring another Media Router Role to act as a hot standby server.
viii. Multiple Redirector Agents shall be used on a large USP installation to increase the service availability and to provide automatic load balancing.

8.13.4.3.6 Video Archive Transfer Capability

i. Archive transfer shall provide the ability to:

    a. Transfer video from a server to another server in the same system.
    b. Transfer video from a federated server to another server.
    c. Transfer video from camera storage to a server.

ii. It shall be possible to program video transfers either on a recurrent schedule, or to trigger them manually or upon connection.
iii. It shall be possible to filter the video of interest for a transfer. The video of interest shall be defined with the following filters:

    a. All archives when the camera was offline.
    b. Alarms.
    c. Playback request from the edge.
    d. Video analytics events.
    e. Motion events.
    f. Bookmarks.
    g. Input triggers.
    h. Time range.

iv. It shall be possible to define the length of video before and after the event used as a filter to determine the video of interest.

v. The USP shall offer an interface for displaying all video archive transfer requests. This interface shall display all the current, requested and scheduled video transfer requests. It shall be possible to edit, trigger, and cancel video archive transfers from this interface.

8.13.4.4 Client Software Applications (CSA)

8.13.4.4.1 Overview

i. The Client Software Applications (CSA) shall provide the user interface for USP configuration and monitoring over any network and be accessible locally or from a remote connection.
ii. The CSA shall consist of the Configuration UI for system configuration and the Monitoring UI for monitoring. The CSA shall be Windows-based and provide an easy-to-use graphical user interface (UI).
iii. The Server Administrator shall be used to configure the server database(s). It shall be web-based and accessible locally on the SSM or across the network.
iv. The CSA shall seamlessly merge access control, automatic license plate recognition (ALPR), and video functionalities within the same user application.
v. The USP shall use the latest user interface (UI) development and programming technologies, such as Microsoft WPF (Windows Presentation Foundation), the XAML markup language, and the .NET software framework.
vi. All applications shall provide an authentication mechanism, which verifies the validity of the user. As such, the administrator (who has all rights and privileges) can define specific access rights and privileges for each user in the system.
vii. Logging on to a CSA shall be done either through locally stored USP user accounts and passwords or using the operator's Windows credentials when Active Directory integration is enabled.
viii. When integrated with Microsoft's Active Directory, the CSA and USP shall authenticate users using their Windows credentials. As a result, the USP will benefit from Active Directory password authentication and strong security features.
ix. The CSA shall support multiple languages, including but not limited to the following: English, French, Arabic, Czech, Dutch, German, Hebrew, Hungarian, Italian, Japanese, Korean, Norwegian, Persian (Farsi), Polish, Portuguese (Brazilian), Simplified and Traditional Chinese, Russian, Spanish, Swedish, Thai, Turkish and Vietnamese.
x. To enhance usability and operator efficiency, the Configuration UI and Monitoring UI shall support many of the latest UI concepts, such as:

    a. A customizable Home Page that includes favorite and recently used tasks.
    b. Task-oriented approach for administrator/operator activities where each type of activity (surveillance, visitor management, individual reports, and more) is an operator task.
    c. Consolidated and consistent workflows for video, ALPR, and access control.
    d. Single click functionality for reporting and tracking. The Monitoring UI shall support both single-click reporting for access control, ALPR, and video, as well as single-click tracking of areas, cameras, doors, zones, cardholders, elevators, ALPR entities, and more. Single-click reporting or tracking shall create a new task with the selected entities to report on or track.

xi. Configuration UI and Monitoring UI Home Page and Tasks

    a. The Configuration UI and Monitoring UI shall be task-oriented.
    b. A task shall be user interface design patterns whose goal is to simplify the user interface by grouping related features from different systems, such as video and access, in the same display window. Features shall be grouped together in a task based on their shared ability to help the user perform a specific task.
    c. Tasks shall be accessible via the Home Page of either the Configuration or the Surveillance CSA.

d. Newly created tasks shall be accessible via the Configuration UI or the Monitoring UI taskbar.
e. Similar tasks shall be grouped into the following categories:

    1. Operation: Access control management, LRP management, and more.
    2. Investigation: Video bookmark/motion/archive reports, access control activity reports, visitor activity reports, alarm reports, ALPR activity reports, and more.
    3. Maintenance: Access control and video configuration reports, troubleshooters, audit trails, health-related reports, and more.

f. An operator shall be able to launch a specific task only if he or she has the appropriate privileges.
g. The Home Page content shall be customizable through the use of privileges to hide tasks that an operator should not have access to and through a list of favorite and recently used tasks. In addition, editing a USP XML file to add new tasks on the fly shall also be possible.

8.13.4.4.2 Configuration User Interface (UI)

i. The Configuration UI application shall allow the administrator or users with appropriate privileges to change the system configuration. The Configuration UI shall provide decentralized configuration and administration of the USP system from anywhere on the IP network.
ii. The configuration of all embedded ACS, VMS, and ALPR systems shall be accessible via the Configuration UI.
iii. The Configuration UI shall have a home page with single-click access to various tasks.
iv. The Configuration UI shall include a variety of tools such as troubleshooting utilities, import tools, and a unit discover tool, and many more.
v. The Configuration UI shall include a static reporting interface to:

    a. View historical events based on entity activity. The user shall be able to perform such actions as printing a report and troubleshooting a specific access event from the reporting view.
    b. View audit trails that show a history of user/administrator changes to an entity.

vi. Common entities, such as users, schedules, alarms and many more, can be reused by all embedded systems (ACS, VMS, and ALPR).

8.13.4.4.3 Monitoring User Interface (UI)

i. The Monitoring UI shall fulfill the role of a Unified Security Interface that is able to monitor video, ALPR, and access control events and alarms, as well as view live and recorded video.
ii. The Monitoring UI shall provide a graphical user interface to control and monitor the USP over any IP network. It shall allow administrators and operators with appropriate privileges to monitor their unified security platform, run reports, and manage alarms.
iii. To enhance usability and operator efficiency, the Monitoring UI shall support the following UI concepts:

    a. Dynamically adaptive interface that adjusts in real-time to what the operator is doing.
    b. A dynamic dashboard loaded with entity-specific widgets (e.g. door and camera widgets).
    c. Use of transparent overlays that can display multiple types of data in a seamless fashion.
    d. Display tile menus and quick commands.
    e. Consolidated and consistent workflows.
    f. Tile menus and quick commands easily accessible within every display tile of the user workspace.

g. Single click functionality for reporting and tracking. The Monitoring UI shall support both single-click reporting for access control, ALPR, and video, as well as single-click tracking of areas, cameras, doors, zones, cardholders, elevators, ALPR entities, and more. Single-click reporting or tracking shall create a new task with the selected entities to report on or to track.

iv. Monitoring UI Home Page and Tasks

a. Similar tasks shall be grouped into the following categories:

1. Operation: Access control/LRP/video surveillance, visitor management, mustering, access control and video alarm monitoring, and more.
2. Investigation: Video bookmark/motion/archive reports, access control activity reports, visitor activity reports, alarm reports, ALPR activity reports, and more.
3. Maintenance: Access control and video configuration reports, trouble-shooters, audit trails, and more.

v. Dynamically Adaptive UI, Dashboard, and Widgets

a. The Monitoring UI shall dynamically adapt to what the operator is doing. This shall be accomplished through the concept of widgets that are grouped in the Monitoring UI dashboard.
b. Widgets shall be mini-applications or mini-groupings in the Monitoring UI dashboard that let the operator perform common tasks and provide the operator with fast access to information and actions.
c. With a single click on an entity (e.g. door or camera) the specific widgets associated to that entity appear and other non-relevant widgets disappear dynamically (instantly). Widgets shall bring the operator information such as door status and camera stream information, as well as user actions, such as door unlock, PTZ controls, and more.
d. Specific widgets include those for a door, camera, alarm, zone, display tile, video stream (statistics), PTZ camera, and more.

vi. Operator Workflows

a. A workflow shall be a sequence of operations an operator or administrator shall execute to complete an activity. The “flow” relates to a clearly defined timeline or sequence for executing the activity.
b. The Monitoring UI shall be equipped with consistent workflows for the ALPR, video, and access control systems that it unifies.
c. Generating or printing a report, setting up or acknowledging an alarm, or creating an incident report shall follow the same process (workflow) whether the operator is working with video, ALPR, or access control, or with both video and access control.

vii. Each task within the Monitoring UI shall consist of one or more of the following items:

a. Event list.
b. Logical tree. Doors, cameras, zones, ALPR units, and elevators shall be grouped under Areas in a hierarchical fashion.
c. Entities list of all entities being tracked.
d. Display tiles with various patterns (1 x 1, 2 x 2, and more).
e. Display tile menu with various commands related to cameras, doors, PTZ, and tile controls.
f. Dashboard with widgets.

viii. The Monitoring UI shall support multiple event lists and display tile patterns, including:

a. Event/alarm list layout only.
b. Display tile layout only.
c. Display tile and alarm/event list combination.

d. ALPR map and alarm/event list combination.

ix. User workspace customization

a. The user shall have full control over the user workspace through a variety of user-selectable customization options. Administrators shall also be able to limit what users and operators can modify in their workspace through privileges.
b. Once customized, the user shall be able to save his or her workspace.
c. The user workspace shall be accessible by a specific user from any client application on the network.
d. Display tile patterns shall be customizable.
e. Event or alarm lists shall span anywhere from a portion of the screen up to the entire screen and shall be resizable by the user. The length of event or alarm lists shall be user-defined. Scroll bars shall enable the user to navigate through lengthy lists of events and alarms.
f. The Monitoring UI shall support multiple display tile patterns (e.g. 1 display tile (1x1 matrix), 16 tiles (8x8 matrix), and multiple additional variations).
g. The Monitoring UI shall support as many monitors as the PC video adapters and Windows Operating System are capable of accepting.
h. Additional customization options include: show/hide window panes, show/hide menus/toolbars, show/hide overlaid information on video, resize different window panes, and choice of tile display pattern on a per task basis.

x. The Monitoring UI shall provide an interface to support the following tasks and activities common to access control, ALPR, and video:

a. Monitoring the events from a live security system (ACS and/or USP and/or ALPR).
b. Generating reports, including custom reports.
c. Monitoring and acknowledging alarms.
d. Creating and editing incidents and generating incident reports.
e. Displaying dynamic graphical maps and floor plans as well as executing actions from dynamic graphical maps and floor plans.
f. Management and execution of hot actions and macros.

xi. The Monitoring UI shall include advanced video capabilities, including:

a. Advanced live video viewing functionality.
b. Advanced archive playing and video playback functionality.
c. Monitoring and management of video system events and alarms.
d. Intercom or duplex audio.
e. Generation of video reports.
f. Control of PTZ cameras.
g. Creating and Monitoring archive transfer requests.
h. Display metadata overlay on live or playback video.

xii. The Monitoring UI shall leverage the Graphical Processing Unit (GPU) for video decoding.

a. The following GPU technologies shall be supported:

1. NVidia CUDA.
2. Intel Quick Sync.
3. The Monitoring UI shall have the ability to decode video through the optimal simultaneous use of the GPU and Computer Processing Unit (CPU).

xiii. The live video viewing capabilities of the Monitoring UI shall include:

a. The ability to display all cameras attached to the USP and all cameras attached to federated systems.

b. Support for live video monitoring on each and every display tile within a task in the user's workspace.
c. The USP shall support uninterrupted video streaming. The CSA shall keep existing video connections active in the event that an SSM (except Archiver) becomes unavailable.
d. The ability to drag and drop a camera into a display tile for live viewing.
e. The ability to drag and drop a camera into a display tile for live viewing on an analogue monitor connected to an IP hardware decoder (converting an IP encoded stream into an analogue video signal).
f. The ability to drag and drop a camera from a map into a display tile for live viewing.
g. Support for digital zoom on live camera video streams.
h. The ability for audio communication with video units with audio input and output.
i. The ability to control pan-tilt-zoom, iris, focus, and presets.
j. The ability to bookmark important events for later retrieval on any archiving camera and to uniquely name each bookmark in order to facilitate future searches.
k. The ability to start/stop recording on any camera in the system that is configured to allow manual recording by clicking on a single button.
l. The ability to activate or de-activate viewing of all system events as they occur.
m. The ability to switch to instant replay of the video for any archiving camera with the simple click of button.
n. The ability to take snapshots of live video and be able to save or print the snapshots.
o. The ability to view the same camera multiple times in different tiles.

xiv. The video playback (archive playing) capabilities of the Monitoring UI shall include:

a. Support for audio and video playback for any time span.
b. Support for video playback on each and every display tile.
c. The ability to instantly replay the video for any archiving camera with the simple click of a button.
d. The ability to select between instant synch of all video streams in playback mode, allowing operators to view events from multiple angles or across several camera fields, or non-synchronous playback.
e. The ability to simultaneously view the same camera in multiple tiles at different time intervals.
f. The ability to control playback with:

    1. Pause.
    2. Lock Speed.
    3. Forward and Reverse Playback at: 1x, 2x, 4x, 6x, 8x, 10x, 20x, 40x, 100x.
    4. Forward and Reverse Playback frame by frame.
    5. Slow Forward and Reverse Playback at: 1/8x, 1/4x, 1/3x, 1/2x.
    6. Loop playback between two time markers.

g. The ability to display a single timeline or one timeline for each selected video stream, which would allow the operator to navigate through the video sequence by simply clicking on any point in the timeline.
h. The ability to display the level of motion at any point on a timeline.
i. The ability to clearly display bookmarked events on the timeline(s).
j. The ability to query archived video using various search criteria, including, but not limited to, time, date, camera, and area.
k. The tool necessary for searching video and associated audio based on user-defined events or motion parameters.
l. The ability to define an area of the video field in which to search for motion as well as define the amount of motion that will trigger search results. The Monitoring UI shall then retrieve all archived video streams that contain motion that meets the search parameters. There shall be a graphical timeline on which the time of each search hit shall be indicated.

m. The ability to browse through a list of all bookmarks created on the system and select any bookmarked event for viewing.
n. The ability to add bookmarks to previously archived video for easier searching and retrieval.
o. Support for digital zoom on playback video streams.
p. Still image export to PNG, JPEG, GIF, and BMP format with Date and Time stamp, and Camera Name on the image (snapshot).
q. Tools for exporting video and a self-contained video player on various media such as USB keys or CD/DVD-ROM. This video player shall be easy to use without training and shall still support reviewing video metadata, such as bookmark, or navigating the video with functions like panoramic camera view de-warping.
r. Tools for exporting video sequences in standard video formats, such as ASF.
s. The ability to encrypt exported video files.
t. The ability for an operator to load previously exported video files from their computer or network.
u. The ability for queries to be saved upon closing the CSA and reappear when the application is reopened.
v. The ability to dynamically block, on demand, video stream dynamically to lower level users to prevent access, for a specific time, to live and recorded video.
w. A tool for building and exporting a set of videos into a single container. This tool shall allow the operator to build sequences of video to create a storyboard and allow the export of synchronous cameras.
x. The ability to store the video export and still image export at a pre-defined storage location.
y. An interface with the ability to list, search, and manipulate previously generated video exports.

xv. Tracking

a. The USP shall permit the user to select multiple entities to monitor from the Monitoring UI by adding the entities one by one to the tracking list.
b. The Monitoring UI shall provide the option to filter which events shall be displayed in the display tile layout and/or event list layout.
c. It shall be possible to lock a Monitoring UI display tile so that it only tracks the activity of a specific entity (e.g. a specific door or camera).
d. The user shall be able to drag and drop an event from an event list (or an alarm from an alarm list) onto a display tile to view a license plate read, cardholder picture ID, badge ID, or live/archived video, among other options.
e. Event, alarm, monitoring/tracking, and report lists shall contain cardholder pictures where applicable.
f. The user shall be permitted to start or pause the viewing of events within each display tile.

xvi. Display Tile Packing and Unpacking

a. The Monitoring UI shall support single-click unpacking and packing for ALPR hits, ALPR reads, areas, doors, zones, camera sequences, and alarms.
b. The packing and unpacking of entities shall allow operators to quickly obtain additional information and camera views of a specific entity.
c. The unpacking of an entity shall display associated entities. For example, unpacking a door with multiple associated cameras shall display all cameras associated with that door. Unpacking shall reconfigure the display tiles to be able to display all associated entities. For example, unpacking a door (or a zone or alarm) that is currently in a 1 x 1 tile configuration and that has 3 cameras tied to it will create a 1 x 3 display tile arrangement for viewing all associated entities.
d. Packing will return the display to the original tile pattern.

xvii. S Visual Tracking

a. The Monitoring UI shall support the ability to manually track a moving target with the single click of a button.
b. The ability to switch from one camera view to an adjacent camera shall be done within a single display tile.
c. Switching between camera streams shall be accomplished by simply clicking on a semi-transparent shape or overlay.
d. Visual tracking shall be available with both live and recorded video.

xviii. The following additional tools or utilities shall be available from the Monitoring UI: create credentials, create cardholders, and access control trouble shooter.

8.13.4.4.4 Server Administrator

i. The Server Administrator shall be used to configure the SSM and the Directory Role (main configuration) and its database(s), to apply the license, and more.
ii. The Server Administrator shall be a web-based application. Through the Server Administrator, it shall be possible to access the SSM across the network or locally on the server.
iii. Access to the Server Administrator shall be protected via login name, password, and encrypted communications.
iv. The Server Administrator shall allow the administrator (user) to perform the following functions:

a. Manage the system license.
b. Configure the database(s) and database server for the Directory Role.
c. Activate/Deactivate the Directory Role.
d. Manually back up the Directory Role database(s) and/or restore the server database(s), as well as configure scheduled backups of the databases.
e. Define the client-to-server communications security settings.
f. Configure the network communications hardware, including connection addresses and ports.
g. Configure system SMTP settings (mail server and port).
h. Configure event and alarm history storage options.

8.13.4.4.5 Unified Web Client (UWC)

i. The UPS shall support a unified web client (UWC) for access control and video.
ii. The UWC shall be a truly thin client with no download required other than an internet web browser or standard web browser plugins.
iii. The UWC shall be platform independent and run within Microsoft Internet Explorer, Firefox, Safari, and Google Chrome.
iv. Web pages for the web client shall be managed and pushed by the Mobile Server. Microsoft IIS or any other web hosting service shall not be required given that all the web pages shall be hosted by the Mobile Server.
v. Functionalities:

a. Login using name and password or Active Directory support shall be available.
b. Encrypted communications for all transactions.
c. Print reports and export to CSV file.
d. Customer logo customization shall be available for multi-tenant and hosted services applications.
e. Video.

1. Live and playback video at 320 x 240, 640 x 480 or 1280 x 1024 @ 15 fps.
2. Video export.
3. 1, 4, 6 or 9 tiles.

4. Basic PTZ Controls (Pan/Tilt, Zoom, go to presets, start pattern).
5. Start/Stop recording.
6. Sample web page for customers to see how to view video for their own development.
7. Add bookmarks

f. Access Control

1. Cardholder and group (add/modify/delete).
2. Credential management (modify/delete).
3. Unlock door.
4. Door Activities report.

g. Alarms

1. Alarm report.

8.13.4.5 Video Display and Recording

8.13.4.5.1 Video Monitor

i. Video monitor features that must be provided are:
ii. Screen Size: Widescreen LCD - 24” diagonal viewing size
iii. Aspect Ratio: 16:9 or 16:10
iv. Rapid response time of 4ms (or faster).
v. Screen resolution: 1920X1080 (minimum native)
vi. Interface: Display Port v1.2 (minimum) or DVI
vii. Picture setup and adjustment using on-screen menus and bezel-mounted buttons
viii. Wall-mountable using locally supplied VESA standard mounting bracket
ix. Viewing Angles: 160° Horizontal / 140° Vertical (minimum)
x. Rated for continuous-use (24 x 7 x 365)
xi. Power requirements: 120 V AC 60 Hz.

8.13.4.6 Video Transmission System

8.13.4.6.1 Fibre Optic Transmission System (Single Mode Fibre)

ETS utilizes a single mode fibre optic transmission system. Refer to Appendix C – Typical Station CCTV System Block Diagram.

At each location where analogue CCTV cameras are still in use, the analogue video signals are transmitted from the camera to the digital video encoder unit, also located on site at each location; (the preferred media is 75Ω coaxial cable however twisted pair has been used in conjunction with Video Balun Transceivers). These video signals are then encoded and streamed to the archivers, client workstations or other systems requesting video. IP based cameras are connected directly to the CCTV network via Ethernet switches in order to provide video streams in the same manner as described for the encoders.

Digital video streams can be displayed on PC based video workstations in the control rooms at Churchill LRT Station Concourse and/or other locations accessible via the network; video streams will be simultaneously recorded at the two central archiver locations in the ETS datacenters regardless of whether they are being live viewed. The main ETS Cisco network is used to transport all video within all ETS facilities.

8.13.5 Archiving - Video Archiver Servers

Video signals from CCTV cameras are simultaneously recorded and archived to provide a record of visual evidence. The system utilizes two sets of centrally located Video Archiver Servers with designated storage space assigned from ETS’ NAS Storage arrays in order to carry out fully redundant recording. Recording of each camera’s video stream, which is a

digital process that is scalable to allow future expandability, and is simultaneously done on two Archiver Servers, located in separate facilities. The entire recording and review process is fully managed by the Video Management system.

Video Archiver Servers shall have that USP Client software applications installed along with the Server role. (Security Center 5.4)

Standard of Acceptance: Genetec Security Center – Omnicast Archiver Role(s)

8.13.6 Multicast Scheme

All cameras must use statically assigned multicast group addresses, assigned from within the central system. These addresses are determined based upon the camera unit's location, the unit's device number within the location and the video stream number supplied by the unit. For more information of the multicast and IP addressing scheme used by ETS, refer to the CCTV DSD and BCPs related to CCTV addressing and configuration.

8.13.7 Alarm Connections

All alarm inputs to the CCTV system are accomplished via Network I/O Audio Modules as described in Section 8.13.4.1.3. These devices are PoE powered from the central switch. There are several different alarms that are passed to the CCTV system. They include: help phone activation, panic alarm activation, TVM door opening, and service door openings. Once a contact is triggered on an alarm unit, the system causes a camera to move to the location of the alarm and pop up the video in the control room.

8.13.8 Monitoring and Alarming

LRT Operations personnel located at the ETS Control Centre administer the functional duties of train control including monitoring and controlling the physical and mechanical requirements of the Edmonton LRT System.

8.13.8.1 Critical camera views include:

i. Station platforms to monitor activity at platform level of passenger boarding and detraining Vehicular traffic crossing locations where pedestrian and vehicular traffic interface with operations (cameras to be fixed type)
ii. All track crossings whether vehicle or pedestrian along the entire ROW (cameras to be fixed type), grade separations and tunnel portals to observe unauthorized entry or activity on LRT right of way (cameras to be 1 PTZ inside each tunnel, 1 fixed and 1 PTZ outside tunnel entrances)
iii. At platform and concourse levels
iv. At underground stations/tunnels

In addition to the platform areas, camera locations must also be considered in the tunnels at the station platform ends. A minimum of one camera must be used to monitor each portal and at least one additional camera must be placed inside the underpass/tunnel for each line of sight in order to track the intruders. Refer to Figure 6 later in this section.

Typically, a minimum of four (4) cameras are installed at each station to cover the platform views. In addition to the four fixed platform cameras, a strategically located PTZ camera must be considered to allow observation of the complete area.

During peak hour and special events, it is essential that LRT Operations use camera views to determine passenger load requirements at selected stations in order to determine if additional trains are required.

In order to efficiently maintain all VMS signs placed throughout a station, it is critical that PTZ cameras be place so as to allow for the remote viewing of both sides of all VMS signs at a station.

8.13.8.2 Interface with Other Subsystems

The CCTV System must interface with other subsystems to provide the required camera field of view at the correct time. Interface must be provided to the video encoder/alarm unit (N.O. dry contact closures) with the following subsystems:

Fare Equipment	Emergency Telephones
Vaults	Panic/Duress Buttons
Motion Detectors (Stand Alone)	Washroom Access
Motion Detectors (Cameras)	

Figure 5 - CCTV Interface Subsystems

Refer to Appendix A - Systems Interface Matrix, indicating the control and monitoring interfacing requirements of all communications subsystems.

8.1.1.1 Portal Intrusion Surveillance System

A typical LRT Portal will have an Entrance and Exit Point on each end of the portal. Each end will require motion and visual monitoring to control unauthorized entry to the portal. The basis of this system is to allow the passage of the LRV through the portal without incident, however, an alarm state will be initiated if the portal is breached by any other object, such as a person, animal, bird or vehicle.

Each portal entry and exit point will require a minimum of one PTZ CCTV camera and one Fixed CCTV camera. One PTZ CCTV camera will be mounted on the exterior of the portal and the second will be mounted at, or near the halfway point within the portal/grade separation (refer to the following Diagram 8.2). The PTZ CCTV cameras will allow full Pan/Tilt/Zoom visibility of any movement within the portal environment, interior and exterior.

The fixed CCTV camera will be mounted within view of the portal entry/exit point.

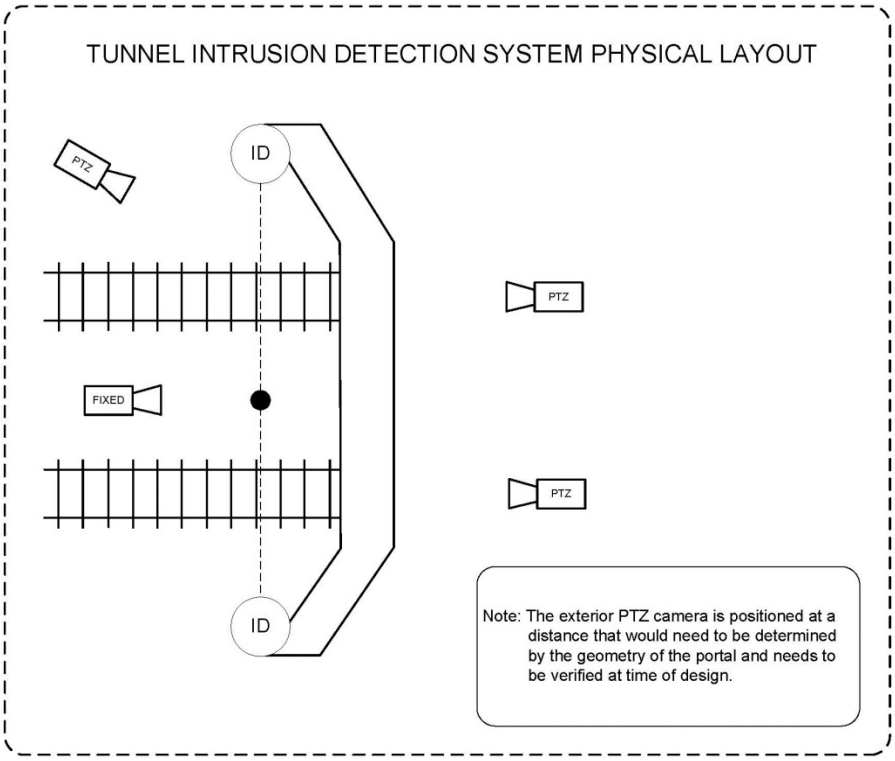

Figure 6 - Tunnel Intrusion Detection System Physical Layout

Each portal opening will require three (3) pairs of approved infrared sensors to trigger intrusion alarms. Typically, the sensors are installed at heights of 2.74 m, 1.52 m and 0.61 m (9', 5' and 2') above Top of Rail (TOR). These heights may require small adjustments on site and therefore, the sensor installation should be flexible enough to accommodate small elevation adjustments. If all three sensors are either activated or deactivated at the same time, a "No Alarm" situation will be present. If any one or two sensors are activated, an "Intrusion Alarm" situation would be triggered, sending an alarm through the Contacts and activating the nearest exterior fixed and PTZ Cameras.

All video, control and alarm information will be transmitted through provided fibre optic cabling to the Control Centre. The Control Centre will monitor the alarm situations and will be required to contact ETS Security if a breach occurs. The system will be reset through the BMS System.

8.13.9 Remote Management and Access

As with other critical systems, ETS has made it possible for authorized users to remotely access the CCTV / USP system via a secured and dual-factor authenticated VPN connection. ETS has also made provision to allow access to the CCTV system from outside the dedicated network from specific designated network locations, such as the City of Edmonton Corporate Network. No access to the CCTV system is available to users who have not been explicitly given access rights.

For security reasons, details concerning remote access and management of this, and other ETS critical systems is only provided to authorized individuals as deemed absolutely necessary by the ETS Communications Group.

8.13.10 Cameras & Programming

Cameras must represent current technology in design and construction. They must be IP based, totally self-contained, high resolution, colour, solid state CCD units with true Day/Night functionality, designed for any mounting position complete with all necessary attachments to suit the application as outlined in these Guidelines. Information on analogue cameras has been excluded as all new installations and upgrades are to be carried out using IP-based cameras, as detailed within this section.

In situ analogue camera replacements, wherein the unit is *not* being upgraded to an IP-based camera, shall be done using a suitable replacement model, as currently available in the market. The performance and device specifications of the new device meet or exceed those of the device being replaced, including:

i. Minimum scene illumination values (Low-light performance)
ii. Colour controls
iii. Day/Night Mode functionality (IR Cut filter operation)
iv. Backlight Compensation performance
v. Back-focus auto-adjustment
vi. Auto-Iris Lens controls
vii. Field-of-view provided by the optics
viii. Input Voltage

8.13.10.1 Fixed Cameras

Camera selection is influenced by location factors. Four types of cameras, which are considered to be suitable for installation, are described as follows:

8.13.10.2 Fixed Camera Type 1

Type 1 cameras must be used in locations where lighting is uncontrolled and lighting conditions can be extremely poor. Cameras that are exposed to a wide range of lighting must adjust dynamically from very bright to very low light levels. These cameras will be suitable for installation either indoors or outdoors without requiring the addition of accessories beyond those which may be required for mounting or cabling. Type 1 cameras will offer significantly higher sensitivity levels in low light than Type 2 cameras. In addition, Type 1 cameras must provide the ability for post-installation adjustment of the field-of-view through remote adjustment of the camera's optical head allowing modification of the Pan, Tilt and Rotation as well as the Zoom level of the lens. Current specifications (as of August 2016) are based on Axis Q36XX-VE Series with details for the Q3615-VE model detailed below:

8.13.10.2.1 Installation, Warranty & Recognitions

i. The specified unit shall be backed by a minimum of three-year manufacturer warranty.
ii. The manufacturer shall provide the option of extended warranty for the camera. The optional extended warranty shall be available in two-year extension blocks for a total warranty period of maximum five years.
iii. The contractor or designated subcontractor shall submit credentials of completed manufacturer certification, verified by a third party organization, as proof of the knowledge.
iv. All equipment shall be tested and configured in accordance with instructions provided by the manufacturer prior to installation.
v. All firmware found in products shall be the latest and most up-to-date provided by the manufacturer, or of a version as specified by the provider of the Video Management Application (VMA) or Network Video Recorder (NVR).

8.13.10.2.2 Sustainability

i. The specified unit shall be manufactured in accordance with ISO 14001.

ii. The specified unit shall be compliant with the EU directives 2011/65/EU (RoHS) and 2012/19/EU (WEEE).
iii. The specified unit shall be compliant with the EU regulation 1907/2006 (REACH).
iv. The specified unit shall be PVC-free in accordance with IEC 61249-2-21.
v. The manufacturer shall have signed and support the UN Global Compact initiative as defined by United Nations https://www.unglobalcompact.org/

8.13.10.2.3 Standards & Regulations

i. The specified unit shall meet product safety standards as defined in IEC/EN/UL 60950-1
ii. The specified unit shall meet product safety standards as defined in IEC/EN/UL 60950-22
iii. The camera shall meet relevant parts of SMPTE 296M (HDTV 720p)
iv. The camera shall meet relevant parts of SMPTE 274M (HDTV 1080p)
v. The camera shall meet ISO/IEC 14496-10 Advanced Video Coding (H.264)
vi. The specified unit shall carry the following EMC approvals:

    a. EN 55022 Class B
    b. EN 55024
    c. FCC Part 15 - Subpart B
    d. VCCI Class B
    e. RCM AS/NZS CISPR 22 Class B
    f. ICES-003 Class B
    g. KCC KN32 Class B
    h. KN35

vii. The camera shall meet the following mechanical environmental standards:

    a. IEC/EN 60529 IP66/67
    b. ISO 20653 IP6K9K
    c. NEMA 250 Type 4X
    d. IEC/EN 62262 IK10
    e. IEC 60068-2-1
    f. IEC 60068-2-2
    g. IEC 60068-2-6
    h. IEC 60068-2-14
    i. IEC 60068-2-27
    j. IEC 60068-2-78

viii. The camera shall meet the following railway environmental standards:

    a. EN 50121-4
    b. IEC 62236-4

ix. The camera shall meet the following standards:

    a. IEEE 802.3af/802.3at (Power over Ethernet)
    b. IEEE 802.1X (Authentication)
    c. IPv4 (RFC 791)
    d. IPv6 (RFC 2460)
    e. QoS – DiffServ (RFC 2475)

8.13.10.2.4 Mechanics & environmental

i. The camera shall be manufactured with an IP66-, IP67-, IP6K9K- and NEMA 4X-rated, IK10 impact-resistant casing with polycarbonate dome, aluminum base and dehumidifying membrane.
ii. The camera shall operate in a temperature range of -40°C to +60°C (-40°F to +140°F).
iii. The camera shall operate in a humidity range of 10-100% RH (condensing).

8.13.10.2.5 Sensors & optics

i. The camera shall be equipped with an IR-sensitive progressive scan sensor.
ii. The camera shall contain a removable IR-cut filter providing Day/Night functionality.
iii. The camera shall meet or exceed the following illumination specifications:
    a. 0.1 lux in color and 0.02 lux in B/W, in HDTV 1080p 25/30 fps with WDR-Forensic Capture
    b. 0.2 lux in color and 0.03 lux in B/W, in HDTV 1080p 50/60 fps.
iv. The camera shall provide 2.2x optical zoom.
v. The camera shall provide 2x digital zoom
vi. The camera shall provide the following camera angle adjustment:
    a. Pan 370°
    b. Tilt ±81°
    c. Roll ±110°

8.13.10.2.6 Image Control

i. The unit shall incorporate Automatic and Manual White Balance.
ii. The camera shall be equipped with an electronic shutter.
iii. The camera shall incorporate Wide Dynamic Range – Forensic Capture functionality providing up to120dB dynamic range.
iv. The camera shall support a configurable maximum shutter in the range of 1/52500 s to 2 s.
v. The camera shall incorporate capture mode with the following settings:
    a. WUXGA (1920x1200) without WDR: 25/30 fps with power line frequency 50/60 Hz
    b. HDTV 1080p (1920x1080) without WDR: 50/60 fps with power line frequency 50/60 Hz
    c. HDTV 1080p (1920x1080) with WDR: 25/30 fps with power line frequency 50/60 Hz
vi. The camera shall allow for rotation of the image in steps of 90º.
vii. The camera shall provide Electronic Image Stabilization.
viii. The camera shall incorporate a function to manually correct barrel distortion, by using a slider to correct distortion in the image.
ix. The camera shall incorporate a function for optimization of low light behavior.

8.13.10.2.7 Video

i. The camera shall provide simultaneous Motion JPEG and H.264 video streams.
ii. The camera shall be designed to provide at least two video streams in HDTV 1080p (1920x1080) at up to 60 frames per second (60 Hz mode) or 50 frames per second (50 Hz mode) using H.264 or Motion JPEG.
iii. The camera shall be designed to provide 2 individually cropped out view areas.
iv. The camera shall provide both landscape format (4:3 and 16:9 aspect ratio) as well as corridor format (3:4 and 9:16 aspect ratio).
v. The camera shall support H.264 Baseline, Main and High Profile.
vi. The H.264 implementation shall include both unicast and multicast functionality and support Constant Bit Rate (CBR) as well as Variable Bit Rate (VBR).
vii. The camera shall support H.264 with automatic scene adaptive bitrate control.
viii. The camera shall for its H.264 implementation support scene adaptive bitrate control with automatic dynamic ROI to reduce bitrate in un-prioritized regions in order to lowering bandwidth and storage requirements.

8.13.10.2.8 Connectors

i. The camera shall be equipped with a RJ45 10BASE-T/100BASE-TX PoE Ethernet port.

8.13.10.2.9 Pan Tilt Zoom functionality

i. The camera shall provide Digital PTZ functionality
ii. The camera shall provide preset positions functionality.

8.13.10.2.10 Event functionality

i. The camera shall be equipped with an integrated event functionality, which can be trigged by:

   a. Video Motion Detection
   b. Live Stream Accessed
   c. Camera tampering
   d. Manual Trigger/Virtual Inputs
   e. PTZ functionality
   f. Embedded third party applications
   g. Edge storage disruption detection
   h. Shock Detected

ii. The cameras response to a trigged event shall include:

   a. Send notification, using HTTP, HTTPS, TCP, SNMP trap or email
   b. Send images, using FTP, HTTP, HTTPS, network share or email
   c. Send video clip, using FTP, HTTP, HTTPS, network share or email
   d. Send SNMP trap message
   e. Recording to local storage and/or network attached storage
   f. PTZ control functionality
   g. WDR mode

8.13.10.2.11 Storage

i. The camera shall be equipped with a video buffer for saving pre- and post-alarm images and shall have a microSD-card slot to support local storage of video.
ii. The camera shall support recording to network attached storage.

8.13.10.2.12 Other functionality

i. The camera shall include a customizable pixel counter functionality, identifying the size of objects in number of pixels.
ii. The camera shall provide text overlay ability, including date and time.
iii. The camera shall have the ability to apply a graphical image as an overlay image in the video stream.
iv. The camera shall provide Remote zoom and Remote focus functionality.
v. The camera shall provide Autoroll functionality.
vi. The camera shall provide the ability to apply privacy masks to the image.

8.13.10.2.13 Network functionality

i. The camera shall support both static IP addresses and addresses from a DHCP-server.
ii. The camera shall support both IPv4 and IPv6.
iii. The camera shall incorporate support for Quality of Service (QoS).
iv. The camera shall incorporate support for Bonjour.
v. To secure access to the unit as well as provided content, the unit shall support HTTPS, SSL/TLS and IEEE802.1X authentication.
vi. The camera shall provide centralized certificate management, with both pre-installed CA certificates and the ability to upload additional CA certificates. The certificates shall be signed by an organization providing digital trust services.
vii. The camera shall support IP address filtering and include at least three different levels of password security.

viii. The camera shall support time synchronization via NTP server.

8.13.10.2.14 Power

i. Power over Ethernet IEEE 802.3af/802.3at Type 1 Class 3
ii. Max 10.4 W
iii. Typical 4.5 W

8.13.10.2.15 Maintenance & service

i. The camera shall provide a log file, containing information about all users connecting to the unit since last restart. The file shall include information about connecting IP address and the time of connecting.
ii. The camera shall be monitored by a Watchdog functionality, which shall automatically re-initiate processes or restart the unit if a malfunction is detected.
iii. The camera shall send a notification when the unit has re-booted and all services are initialized.

8.13.10.2.16 API & applications

i. The unit shall contain a built-in web server making video, audio and configuration available in a standard browser environment using HTTP.
ii. The camera shall be fully supported by open and published API (Application Programmers Interface) providing necessary information for integration of functionality into third party applications.

8.13.10.3 Fixed Camera Type 2

Type 2 cameras must be used in locations where lighting is more evenly controlled and lighting conditions are more consistent. Cameras may still be exposed to extremely bright light or glare and must adjust dynamically to these conditions. Type 2 cameras will not offer the same sensitivity levels for low light conditions as those of Type 1 cameras. These cameras will be adequate for use outdoors or where cameras may be exposed to the elements, temperature fluctuations or moisture. Current specifications (as of August 2016) are based on Axis Q35XX-VE Series with details for the Q3505-VE model detailed below:

8.13.10.3.1 Standards, Regulations & Recognitions

i. The camera shall be backed by a minimum of three-year manufacturer warranty.
ii. The manufacturer shall provide the option of extended warranty for the camera. The optional extended warranty shall be available in two-year extension blocks for a total warranty period of maximum five years.
iii. The contractor or designated subcontractor shall submit credentials of completed manufacturer certification, verified by a third party organization, as proof of the knowledge.
iv. The camera shall meet product safety standards as defined in IEC/EN/UL 60950-1
v. The camera shall meet product safety standards as defined in IEC/EN/UL 60950-22
vi. The camera shall meet ISO/IEC 14496-10 MPEG-4 Part 10, Advanced Video Coding (H.264)
vii. The camera shall meet ISO/IEC 14496-2 (Profiles ASP and SP) (MPEG-4 Part 2)
viii. The camera shall meet SMPTE 296M (HDTV 720p)
ix. The camera shall meet SMPTE 274M (HDTV 1080p)
x. The camera shall meet ONVIF Profile S or ONVIF Version 1.01 or higher as defined by the ONVIF organization.
xi. The camera shall carry the following EMC approvals:

    a. EN55022 Class B
    b. EN55024
    c. FCC Part 15 - Subpart B Class A + B

d. VCCI Class B
e. C-tick AS/NZS CISPR22 Class B
f. ICES-003 Class B
g. KN22 Class B
h. KN24

xii. The camera shall meet the following standards:

a. IEEE 802.3af/802.3at (Power over Ethernet)
b. IEEE 802.1X (Authentication)
c. IPv4 (RFC 791)
d. IPv6 (RFC 2460)
e. QoS – DiffServ (RFC 2475)

xiii. The camera shall meet the following mechanical environmental standards:

a. IEC 60529 IP66/67
b. NEMA 250 Type 4X
c. IEC/EN 62262 IK10+ (50 J)
d. ISO 20653 IP6K9K
e. IEC 60068-2-1
f. IEC 60068-2-2
g. IEC 60068-2-6
h. IEC 60068-2-14
i. IEC 60068-2-27
j. IEC 60068-2-60
k. IEC 60068-2-78

xiv. The camera shall meet the following Railway environmental standards:

a. EN 50121-4
b. IEC 62236-4

8.13.10.3.2 Mechanics & environmental

i. The camera enclosure shall include the following:

a. Vandal resistant aluminum and polycarbonate body providing encapsulated electronics
b. clear transparent cover
c. Fitted with a dehumidifying membrane

ii. The camera enclosure shall provide the ability to adjust the camera modules angle with -5 to 90° tilt, ±360° pan and ±95° rotation while maintaining an image that is not interfered by the camera housing.
iii. The camera shall operate in a temperature range of -40°C to +60°C (-40°F to +140°F).
iv. The camera shall operate in a humidity range of 10-100% RH (condensing).

8.13.10.3.3 Sensors & optics

i. The camera shall be equipped with an IR-sensitive progressive scan sensor.
ii. The camera shall be fitted with a megapixel lens providing automated iris functionality with P-Iris control and provide remote zoom and focus functionality.
iii. The camera shall provide images down to:

a. Lens 9 mm - HDTV 1080p 25/30 fps with WDR-Forensic Capture: Color 0.18 lux, B/W 0.04 lux
b. Lens 9 mm - HDTV 1080p 50/60 fps: Color 0.36 lux, B/W 0.08 lux
c. Lens 22 mm - HDTV 1080p 25/30 fps with WDR-Forensic Capture: Color 0.28 lux, B/W 0.06 lux

d. Lens 22 mm - HDTV 1080p 50/60 fps: Color: 0.56 lux, B/W:0.11 lux

8.13.10.3.4 Image Control

i. The camera shall incorporate Automatic and Manual White Balance.
ii. The camera shall incorporate automatic and manually defined exposure zones.
iii. The camera shall support a configurable shutter in the range from 1/142850 s to 2 s in HDTV 1080p 25/30 50/60 fps mode.
iv. The camera shall support a configurable shutter in the range from 1/142850 s to 2 s in WUXGA (1920x1200) 25/30 fps mode.
v. The camera shall incorporate capture mode with the following settings:

   a. HDTV1080p (1920 x 1080) with WDR: 25/30 fps with power line frequency 50/60 Hz
   b. HDTV1080p (1920 x 1080) without WDR: 50/60 fps with power line frequency 50/60 Hz
   c. WUXGA (1920 x 1200) without WDR: 25/30 fps with power line frequency 50/60 Hz

vi. The camera shall provide backlight compensation.
vii. The camera shall allow for rotation of the image in steps of 90º.
viii. The camera shall incorporate a function for optimization of low light behavior.
ix. The camera shall incorporate a function for Electronic Image Stabilization (EIS) for real-time image stabilization.
x. The camera shall incorporate a function to manually correct barrel distortion, by using a slider to correct distortion in the image.

8.13.10.3.5 Video

i. The camera shall provide simultaneous Motion JPEG and H.264 video streams.
ii. The camera shall be designed to provide at least two video streams in HDTV 1080p (1920x1080) at up to 60 frames per second (60 Hz mode) or 50 frames per second (50 Hz mode).
iii. The camera shall support Baseline Profile H.264 encoding with motion estimation in up to 60 fps (60 Hz), 50 fps (50 Hz) in HDTV 1080p resolution.
iv. The camera shall support Main Profile H.264 encoding with motion estimation and context-adaptive binary arithmetic coding (CABAC) in up to 60 fps (60 Hz), 50 fps (50 Hz) in HDTV 1080p resolution.
v. The camera shall support High Profile H.264 encoding with motion estimation up to 50/60 fps in up to 60 fps (60 Hz), 50 fps (50 Hz) in HDTV 1080p resolution.
vi. The camera shall provide video in landscape format 4:3 and 16:9 as well as corridor format 3:4 and 9:16.
vii. The H.264 implementation shall include both unicast and multicast functionality and support Maximum Bit Rate (MBR) as well as Variable Bit Rate (VBR).

8.13.10.3.6 Audio

i. The camera shall support two-way full duplex audio.
ii. Input sources:

   a. External microphone (balanced/unbalanced)
   b. External line device

iii. Output sources:

   a. External line device

iv. Encoding

The camera shall support:
   a. AAC LC at 8/16 kHz
   b. G.711 PCM at 8 kHz

c. G.726 ADPCM at 8 kHz

8.13.10.3.7 Connectors

i. The camera shall be equipped with a RJ45 10BASE-T/100BASE-TX PoE Ethernet port.
ii. The camera shall be equipped with two configurable inputs/outputs, configurable for in- or output functionality.
iii. The camera shall be equipped with a 3.5 mm connector for Line out.
iv. The camera shall be equipped with a 3.5 mm connector for Line/Mic In.

8.13.10.3.8 PTZ functionality

i. The camera shall incorporate guard tour functionality.
ii. The camera shall incorporate preset positions functionality.
iii. The camera shall provide 3x optical and 2x digital zoom with 9 mm lens.
iv. The camera shall provide 2.4x optical and 2x digital zoom with 22 mm lens.
v. The camera shall provide control queue functionality.
vi. The camera shall provide On-Screen Directional Indicator (OSDI) functionality.

8.13.10.3.9 Event functionality

i. The camera shall be equipped with an integrated event functionality, which can be trigged by:

   a. Live Stream Accessed
   b. Tampering
   c. Video Motion Detection
   d. Audio Detection
   e. Day/Night Mode
   f. External Input
   g. Temperature
   h. Schedule
   i. Manual Trigger/Virtual Inputs
   j. PTZ functionality
   k. Embedded third party applications
   l. Edge storage disruption detection

ii. The cameras response to a trigged event shall include:

   a. Send notification, using HTTP, HTTPS, TCP or email
   b. Send images, using FTP, HTTP, HTTPS, network share or email
   c. Send video clip, using FTP, HTTP, HTTPS, network share or email
   d. Day/Night Vision Mode
   e. Play Audio Clip
   f. Activate External Output
   g. Send SNMP trap message
   h. PTZ control functionality
   i. WDR Mode
   j. Recording to local storage and/or network attached storage

8.13.10.3.10 Storage

i. The camera shall be equipped with a video buffer for saving pre- and post-alarm images and shall have a microSD-card slot to support local storage of video.
ii. The camera shall support SD/SDHC/SDXC UHS-I, memory up to 64 GB, speed class 10.
iii. The camera shall support recording to network attached storage.

8.13.10.3.11 Other functionality

i. The camera shall include a customizable pixel counter functionality, identifying the size of objects in number of pixels.
ii. The camera shall provide text overlay ability, including date and time.
iii. The camera shall have the ability to apply a graphical image as an overlay image in the video stream.
iv. The camera shall have the ability to apply privacy masks in the video stream.

8.13.10.3.12 Network functionality

i. The camera shall support both static IP addresses and addresses from a DHCP-server.
ii. The camera shall support both IPv4 and IPv6.
iii. The camera shall incorporate support for Quality of Service (QoS).
iv. The camera shall incorporate support for Bonjour.
v. To secure access to the unit as well as provided content, the camera shall support HTTPS, SSL/TLS.
vi. The camera shall support IEEE 802.1X authentication.
vii. The camera shall provide centralized certificate management, with both pre-installed CA certificates and the ability to upload additional CA certificates. The certificates shall be signed by an organization providing digital trust services.
viii. The camera shall support IP address filtering and include at least three different levels of password security.
ix. The camera shall support time synchronization via NTP server.

8.13.10.3.13 Power

i. The camera shall accept Power over Ethernet IEEE 802.3af/802.3at Type 1 Class 3

8.13.10.3.14 Maintenance & service

i. The camera shall provide a log file, containing information about all users connecting to the unit since last restart. The file shall include information about connecting IP address and the time of connecting.
ii. The camera shall be monitored by a Watchdog functionality, which shall automatically re-initiate processes or restart the unit if a malfunction is detected.
iii. The camera shall send a notification when the unit has re-booted and all services are initialized.

8.13.10.3.15 API & applications

i. The unit shall contain a built-in web server making video, audio and configuration available in a standard browser environment using HTTP.
ii. The camera shall be fully supported by open and published API (Application Programmers Interface) providing necessary information for integration of functionality into third party applications.
iii. The camera shall allow for applications developed by third parties to be uploaded into the camera, and the camera vendor shall provide compatibility tools to verify the stability and performance of the applications.

8.13.10.4 Fixed Camera Type 3

Type 3 cameras shall offer the same operational features as Type 2 cameras with the exception of environmental controls. Type 3 cameras shall be used indoors in locations where lighting is more evenly controlled and lighting conditions are more consistent but where it will not be exposed to low temperatures or moisture. Current specifications (as of August 2016) are based on Axis Q35XX-V Series with details for the Q3505-V model detailed below:

8.13.10.4.1 Standards, Regulations & Recognitions

i. The camera shall be backed by a minimum of three-year manufacturer warranty.
ii. The manufacturer shall provide the option of extended warranty for the camera. The optional extended warranty shall be available in two-year extension blocks for a total warranty period of maximum five years.
iii. The contractor or designated subcontractor shall submit credentials of completed manufacturer certification, verified by a third party organization, as proof of the knowledge.
iv. The specified unit shall be PVC-free in accordance with IEC 61249-2-21
v. The camera shall meet product safety standards as defined in IEC/EN/UL 60950-1
vi. The camera shall meet ISO/IEC 14496-10 MPEG-4 Part 10, Advanced Video Coding (H.264)
vii. The camera shall meet ISO/IEC 14496-2 (Profiles ASP and SP) (MPEG-4 Part 2)
viii. The camera shall meet SMPTE 296M (HDTV 720p)
ix. The camera shall meet SMPTE 274M (HDTV 1080p)
x. The camera shall meet ONVIF Profile S or ONVIF Version 1.01 or higher as defined by the ONVIF organization.
xi. The camera shall carry the following EMC approvals:

    a. EN55022 Class B
    b. EN55024
    c. FCC Part 15 - Subpart B Class B
    d. VCCI Class B
    e. C-tick AS/NZS CISPR22 Class B
    f. ICES-003 Class B
    g. KN22 Class B
    h. KN24

xii. The camera shall meet the following standards:

    a. IEEE 802.3af/802.3at (Power over Ethernet)
    b. IEEE 802.1X (Authentication)
    c. IPv4 (RFC 791)
    d. IPv6 (RFC 2460)
    e. QoS – DiffServ (RFC 2475)

xiii. The camera shall meet the following mechanical environmental standards:

    a. IEC/EN 60529 IP52
    b. IEC/EN 62262 IK10
    c. IEC 60068-2-1
    d. IEC 60068-2-2
    e. IEC 60068-2-6
    f. IEC 60068-2-14
    g. IEC 60068-2-27
    h. IEC 60068-2-52
    i. IEC 60068-2-60
    j. IEC 60068-2-78

xiv. The camera shall meet the following Railway environmental standards:

    a. EN 50121-4
    b. IEC 62236-4

8.13.10.4.2 Mechanics & environmental

i. The camera enclosure shall include the following:

a. Vandal resistant aluminum and polycarbonate body providing encapsulated electronics
b. Clear transparent cover
c. Fitted with a dehumidifying membrane

ii. The camera enclosure shall provide the ability to adjust the camera modules angle with -5° to 90° tilt, ±360° pan and ±95° rotation while maintaining an image that is not interfered by the camera housing.
iii. The camera shall operate in a temperature range of -10°C to +50°C (14°F to +122°F).
iv. The camera shall operate in a humidity range of 10-85% RH (non-condensing).

8.13.10.4.3 Sensors & optics

i. The camera shall be equipped with an IR-sensitive progressive scan sensor.
ii. The camera shall be fitted with a megapixel lens providing automated iris functionality with P-Iris control and provide remote zoom and focus functionality.
iii. The camera shall provide images down to:

a. Lens 9 mm - HDTV 1080p 25/30 fps with WDR-Forensic Capture: Color 0.18 lux, B/W 0.04 lux
b. Lens 9 mm - HDTV 1080p 50/60 fps: Color 0.36 lux, B/W 0.08 lux
c. Lens 22 mm - HDTV 1080p 25/30 fps with WDR-Forensic Capture: Color 0.28 lux, B/W 0.06 lux
d. Lens 22 mm - HDTV 1080p 50/60 fps: Color: 0.56 lux, B/W:0.11 lux

8.13.10.4.4 Image Control

i. The camera shall incorporate Automatic and Manual White Balance.
ii. The camera shall incorporate automatic and manually defined exposure zones.
iii. The camera shall support a configurable shutter in the range from 1/142850 s to 2 s in HDTV 1080p 25/30 50/60 fps mode.
iv. The camera shall support a configurable shutter in the range from 1/142850 s to 2 s in WUXGA (1920x1200) 25/30 fps mode.
v. The camera shall incorporate capture mode with the following settings:

a. HDTV1080p (1920 x 1080) with WDR: 25/30 fps with power line frequency 50/60 Hz
b. HDTV1080p (1920 x 1080) without WDR: 50/60 fps with power line frequency 50/60 Hz
c. WUXGA (1920 x 1200) without WDR: 25/30 fps with power line frequency 50/60 Hz

vi. The camera shall provide backlight compensation.
vii. The camera shall allow for rotation of the image in steps of 90º.
viii. The camera shall incorporate a function for optimization of low light behavior.
ix. The camera shall incorporate a function for Electronic Image Stabilization (EIS) for real-time image stabilization.
x. The camera shall incorporate a function to manually correct barrel distortion, by using a slider to correct distortion in the image.

8.13.10.4.5 Video

i. The camera shall provide simultaneous Motion JPEG and H.264 video streams.
ii. The camera shall be designed to provide at least two video streams in HDTV 1080p (1920x1080) at up to 60 frames per second (60 Hz mode) or 50 frames per second (50 Hz mode).
iii. The camera shall support Baseline Profile H.264 encoding with motion estimation in up to 60 fps (60 Hz), 50 fps (50 Hz) in HDTV 1080p resolution.
iv. The camera shall support Main Profile H.264 encoding with motion estimation and context-adaptive binary arithmetic coding (CABAC) in up to 60 fps (60 Hz), 50 fps (50 Hz) in HDTV 1080p resolution.

v. The camera shall support High Profile H.264 encoding with motion estimation up to 50/60 fps in up to 60 fps (60 Hz), 50 fps (50 Hz) in HDTV 1080p resolution.
vi. The camera shall provide video in landscape format 4:3 and 16:9 as well as corridor format 3:4 and 9:16.
vii. The H.264 implementation shall include both unicast and multicast functionality and support Maximum Bit Rate (MBR) as well as Variable Bit Rate (VBR).

8.13.10.4.6 Audio

i. The camera shall support two-way full duplex audio.
ii. Input sources:

    a. External microphone (balanced/unbalanced)
    b. External line device

iii. Output sources:

    a. External line device

iv. Encoding

    The camera shall support:

    a. AAC LC at 8/16 kHz
    b. G.711 PCM at 8 kHz
    c. G.726 ADPCM at 8 kHz

8.13.10.4.7 Connectors

i. The camera shall be equipped with a RJ45 10BASE-T/100BASE-TX PoE Ethernet port.
ii. The camera shall be equipped with two configurable inputs/outputs, configurable for in- or output functionality.
iii. The camera shall be equipped with a 3.5 mm connector for Line out.
iv. The camera shall be equipped with a 3.5 mm connector for Line/Mic In.

8.13.10.4.8 PTZ functionality

i. The camera shall incorporate guard tour functionality.
ii. The camera shall incorporate preset positions functionality.
iii. The camera shall provide 3x optical and 2x digital zoom with 9 mm lens.
iv. The camera shall provide 2.4x optical and 2x digital zoom with 22 mm lens.
v. The camera shall provide control queue functionality.
vi. The camera shall provide On-Screen Directional Indicator (OSDI) functionality.

8.13.10.4.9 Event functionality

i. The camera shall be equipped with an integrated event functionality, which can be trigged by:

    a. Live Stream Accessed
    b. Tampering
    c. Video Motion Detection
    d. Shock Detected
    e. Audio Detection
    f. Day/Night Mode
    g. External Input
    h. Temperature
    i. Schedule
    j. Manual Trigger/Virtual Inputs
    k. PTZ functionality
    l. Embedded third party applications

m. Edge storage disruption detection

ii. The cameras response to a trigged event shall include:

a. Send notification, using HTTP, HTTPS, TCP or email
b. Send images, using FTP, HTTP, HTTPS, network share or email
c. Send video clip, using FTP, HTTP, HTTPS, network share or email
d. Day/Night Vision Mode
e. Play Audio Clip
f. Activate External Output
g. Send SNMP trap message
h. PTZ control functionality
i. WDR Mode
j. Recording to local storage and/or network attached storage

8.13.10.4.10 Storage

i. The camera shall be equipped with a video buffer for saving pre- and post-alarm images and shall have a microSD-card slot to support local storage of video.
ii. The camera shall support SD/SDHC/SDXC UHS-I, memory up to 64 GB, speed class 10.
iii. The camera shall support recording to network attached storage.

8.13.10.4.11 Other functionality

i. The camera shall include a customizable pixel counter functionality, identifying the size of objects in number of pixels.
ii. The camera shall provide text overlay ability, including date and time.
iii. The camera shall have the ability to apply a graphical image as an overlay image in the video stream.
iv. The camera shall have the ability to apply privacy masks in the video stream.

8.13.10.4.12 Network functionality

i. The camera shall support both static IP addresses and addresses from a DHCP-server.
ii. The camera shall support both IPv4 and IPv6.
iii. The camera shall incorporate support for Quality of Service (QoS).
iv. The camera shall incorporate support for Bonjour.
v. To secure access to the unit as well as provided content, the camera shall support HTTPS, SSL/TLS.
vi. The camera shall support IEEE 802.1X authentication.
vii. The camera shall provide centralized certificate management, with both pre-installed CA certificates and the ability to upload additional CA certificates. The certificates shall be signed by an organization providing digital trust services.
viii. The camera shall support IP address filtering and include at least three different levels of password security.
ix. The camera shall support time synchronization via NTP server.

8.13.10.4.13 Power

i. The camera shall accept Power over Ethernet IEEE 802.3af/802.3at Type 1 Class 2.

8.13.10.4.14 Maintenance & service

i. The camera shall provide a log file, containing information about all users connecting to the unit since last restart. The file shall include information about connecting IP address and the time of connecting.
ii. The camera shall be monitored by a Watchdog functionality, which shall automatically re-initiate processes or restart the unit if a malfunction is detected.

iii. The camera shall send a notification when the unit has re-booted and all services are initialized.

8.13.10.4.15 API & applications

i. The unit shall contain a built-in web server making video, audio and configuration available in a standard browser environment using HTTP.
ii. The camera shall be fully supported by open and published API (Application Programmers Interface) providing necessary information for integration of functionality into third party applications.

8.13.10.5 PAN/TILT/ZOOM (PTZ) Cameras – Interior Application

ETS requires that unitized Pan, Tilt, Zoom cameras be installed to allow for expanded coverage of larger areas and to provide tracking options during critical events. In areas where the camera will not be subject to temperatures below freezing (0°C) or high moisture levels, the PTZ camera can be an interior rated device. Current specifications (as of August 2016) are based on Axis Q6055 as detailed below:

8.13.10.5.1 Sensors & optics

i. The camera shall be equipped with an IR-sensitive progressive scan sensor.
ii. The camera shall contain a removable IR-cut filter providing Day/Night functionality.
iii. The camera shall meet or exceed the following illumination specifications:

    a. 0.3 lux at 30 IRE F1.6 (color)
    b. 0.03 lux at 30 IRE F1.6 (B/W)
    c. 0.5 lux at 50 IRE F1.6 (color)
    d. 0.04 lux at 50 IRE F1.6 (B/W)

iv. The camera shall provide 32x optical zoom.
v. The camera shall provide 12x digital zoom.
vi. The camera shall provide adjustable zoom speed.

8.13.10.5.2 Image Control

i. The unit shall incorporate Automatic and Manual White Balance.
ii. The camera shall incorporate Wide Dynamic Range - providing up to120 dB dynamic range.
iii. The camera shall incorporate an electronic shutter operating in the range of:

    a. 1/33000 s to 1/3 s (50 Hz)
    b. 1/33000 s to 1/4 s (60 Hz)

iv. The camera shall incorporate highlight compensation functionality.
v. The camera shall incorporate a function for optimization of low light behavior.
vi. The camera shall provide backlight compensation.

8.13.10.5.3 Video

i. The camera shall provide simultaneous Motion JPEG and H.264 video streams.
ii. The camera shall be designed to provide at least two video streams in HDTV 1080p (1920x1080) at up to 30 frames per second (60 Hz mode) or 25 frames per second (50 Hz mode) using H.264 or Motion JPEG.
iii. The camera shall be designed to provide at least two video streams in HDTV 720p (1280x720) at up to 60 frames per second (60 Hz mode) or 50 frames per second (50 Hz mode) using H.264 or Motion JPEG.
iv. The camera shall support H.264 Baseline, Main and High Profile.
v. The H.264 implementation shall include both unicast and multicast functionality and support Maximum Bit Rate (MBR) as well as Variable Bit Rate (VBR).

vi. The camera shall support H.264 with automatic scene adaptive bitrate control.
vii. The camera shall for its H.264 implementation support scene adaptive bitrate control with automatic dynamic ROI to reduce bitrate in un-prioritized regions in order to lowering bandwidth and storage requirements.

8.13.10.5.4 Pan Tilt functionality

i. The camera shall provide more than 255 manually set preset positions.
ii. The camera shall provide e-flip functionality, which will automatically rotate the image 180° electronically when following a moving object passing under the camera.
iii. The camera shall provide a guard tour functionality, which allows the dome to automatically move between selected presets using an individual speed and viewing time for each preset.
iv. The camera shall be able to record a custom PTZ tour, operated using an input device such as a joystick, mouse or keyboard, and then use and recall this as a guard tour.
v. The camera shall be able to detect and automatically follow moving objects in the cameras field of view.
vi. The camera shall provide On-screen directional indicator (OSDI) functionality.
vii. The camera shall be equipped with accurate high-speed pan-tilt functionality with 360° endless pan range and a 180° tilt range.
viii. The camera shall provide pan and tilt speed between 0.05° - 450°/sec.

8.13.10.5.5 Event functionality

i. The camera shall be equipped with an integrated event functionality, which can be trigged by:

    a. Video Motion Detection
    b. Audio Detection
    c. Live Stream Accessed
    d. Manual Trigger/Virtual Inputs
    e. Fan malfunctioning
    f. PTZ functionality
    g. External input
    h. Embedded third party applications
    i. Edge storage disruption detection
    j. Shock Detected

ii. The cameras response to a trigged event shall include:

    a. Send notification, using HTTP, HTTPS, TCP, SNMP trap or email
    b. Send images, using FTP, HTTP, HTTPS, network share or email
    c. Send video clip, using FTP, HTTP, HTTPS, network share or email
    d. Recording to local storage and/or network attached storage
    e. Activating external output
    f. Day/Night Vision Mode
    g. Play audio clip
    h. PTZ control functionality
    i. Overlay Text

8.13.10.5.6 Storage

i. The camera shall be equipped with a video buffer for saving pre- and post-alarm images and shall have a SD card slot to support local storage of video.
ii. The camera shall support recording to network attached storage.

8.13.10.5.7 Security

i. To secure access to the unit as well as provided content, the unit shall support HTTPS, SSL/TLS and IEEE802.1X authentication.
ii. The camera shall provide centralized certificate management, with both pre-installed CA certificates and the ability to upload additional CA certificates. The certificates shall be signed by an organization providing digital trust services.
iii. The camera shall support IP address filtering and include at least three different levels of password security.

8.13.10.5.8 Product installation & maintenance

i. The camera shall include a customizable pixel counter functionality, identifying the size of objects in number of pixels.
ii. The camera shall allow updates of the software (firmware) over the network, using FTP or HTTP.
iii. The camera shall support time synchronization via NTP server.
iv. The camera shall provide a log file, containing information about all users connecting to the unit since last restart. The file shall include information about connecting IP address and the time of connecting.
v. The camera shall be monitored by a Watchdog functionality, which shall automatically re-initiate processes or restart the unit if a malfunction is detected.
vi. The camera shall send a notification when the unit has re-booted and all services are initialized.

8.13.10.5.9 API & applications

i. The unit shall contain a built-in web server making video, audio and configuration available in a standard browser environment using HTTP.
ii. The camera shall be fully supported by open and published API (Application Programmers Interface) providing necessary information for integration of functionality into third party applications.

8.13.10.5.10 Network functionality

i. The camera shall support both static IP addresses and addresses from a DHCP-server.
ii. The camera shall support both IPv4 and IPv6.
iii. The camera shall incorporate support for Quality of Service (QoS).
iv. The camera shall incorporate support for Bonjour.

8.13.10.5.11 Other Functionality

i. The camera shall provide text overlay ability, including date and time.
ii. The camera shall have the ability to apply a graphical image as an overlay image in the video stream.
iii. The camera shall have the ability to provide up to 32 individual 3D privacy masks to the image.

8.13.10.5.12 Mechanics & Environmental

i. The camera shall be manufactured with an IP52-rated metal casing (aluminum).
ii. The camera shall operate in a temperature range of 0°C to 50°C (32°F to 122°F).
iii. The camera shall operate in a humidity range of 10-85% RH (non-condensing).

8.13.10.5.13 Connectors

i. The camera shall be equipped with a RJ45 10BASE-T/100BASE-TX PoE Ethernet port.
ii. The unit shall, by using a separate connection module connected to the camera using a “multi connector cable”, provide connectivity for:

a. Digital inputs and outputs.
b. 3.5 mm jack for line/mic input
c. 3.5 mm jack for line out.
d. AC power
e. DC power

8.13.10.5.14 Power

i. Power over Ethernet IEEE 802.3at Type 2 Class 4

a. Max 19 W
b. Typical 13 W

ii. AC input

a. Max 25 VA
b. Typical 17 VA

iii. DC input

a. Max 16 W
b. Typical 11 W

8.13.10.5.15 Standards & Regulations

i. The specified unit shall meet product safety standards as defined in IEC/EN/UL 60950-1
ii. The camera shall meet relevant parts of SMPTE 296M (HDTV 720p)
iii. The camera shall meet relevant parts of SMPTE 274M (HDTV 1080p)
iv. The camera shall meet ISO/IEC 14496-10 Advanced Video Coding (H.264)
v. The specified unit shall carry the following EMC approvals:

a. EN 55022 Class A
b. EN 55024
c. FCC Part 15 - Subpart A
d. VCCI Class A
e. RCM AS/NZS CISPR 22 Class A
f. ICES-003 Class A
g. KCC KN32 Class A
h. KN35

vi. The camera shall meet the following mechanical environmental standards:

a. IEC/EN 60529 IP52
b. IEC 60721-4-3
c. IEC 60068-2
d. The camera shall meet the following standards:
e. IEEE 802.3at (Power over Ethernet Plus)
f. IEEE 802.1X (Authentication)
g. IPv4 (RFC 791)
h. IPv6 (RFC 2460)
i. QoS – DiffServ (RFC 2475)

8.13.10.5.16 Sustainability

i. The specified unit shall be manufactured in accordance with ISO 14001.
ii. The specified unit shall be compliant with the EU directives 2011/65/EU (RoHS) and 2012/19/EU (WEEE).
iii. The specified unit shall be compliant with the EU regulation 1907/2006 (REACH).
iv. The specified unit shall be PVC-free in accordance with IEC 61249-2-21.
v. The manufacturer shall have signed and support the UN Global Compact initiative as defined by United Nations https://www.unglobalcompact.org/

8.13.10.5.17 Installation, Warranty & Recognitions

i. The specified unit shall be backed by a minimum of three-year manufacturer warranty.
ii. The manufacturer shall provide the option of extended warranty for the camera. The optional extended warranty shall be available in two-year extension blocks for a total warranty period of maximum five years.
iii. The contractor or designated subcontractor shall submit credentials of completed manufacturer certification, verified by a third party organization, as proof of the knowledge.
iv. All equipment shall be tested and configured in accordance with instructions provided by the manufacturer prior to installation.
v. All firmware found in products shall be the latest and most up-to-date provided by the manufacturer, or of a version as specified by the provider of the Video Management Application (VMA) or Network Video Recorder (NVR).

8.13.10.6 PAN/TILT/ZOOM (PTZ) Cameras – Exterior Application

ETS requires that unitized Pan, Tilt, Zoom cameras be installed to allow for expanded coverage of larger areas and to provide tracking options during critical events. In areas where the camera will be subject to the elements, including temperatures below freezing (0°C) or high moisture levels, the PTZ camera shall be an environmentally rated device. Current specifications (as of August 2016) are based on Axis Q6055-E as detailed below:

8.13.10.6.1 Sensors & optics

i. The camera shall be equipped with an IR-sensitive progressive scan sensor.
ii. The camera shall contain a removable IR-cut filter providing Day/Night functionality.
iii. The camera shall meet or exceed the following illumination specifications:

    a. 0.3 lux at 30 IRE F1.6 (color)
    b. 0.03 lux at 30 IRE F1.6 (B/W)
    c. 0.5 lux at 50 IRE F1.6 (color)
    d. 0.04 lux at 50 IRE F1.6 (B/W)

iv. The camera shall provide 32x optical zoom.
v. The camera shall provide 12x digital zoom.
vi. The camera shall provide adjustable zoom speed.

8.13.10.6.2 Image Control

i. The unit shall incorporate Automatic and Manual White Balance.
ii. The camera shall incorporate Wide Dynamic Range - providing up to120dB dynamic range.
iii. The camera shall incorporate an electronic shutter operating in the range of:

    a. 1/33000 s to 1/3 s (50 Hz)
    b. 1/33000 s to 1/4 s (60 Hz)

iv. The camera shall incorporate highlight compensation functionality.
v. The camera shall incorporate a function for optimization of low light behavior.
vi. The camera shall provide backlight compensation.

8.13.10.6.3 Video

i. The camera shall provide simultaneous Motion JPEG and H.264 video streams.
ii. The camera shall be designed to provide at least two video streams in HDTV 1080p (1920x1080) at up to 30 frames per second (60 Hz mode) or 25 frames per second (50 Hz mode) using H.264 or Motion JPEG.

iii. The camera shall be designed to provide at least two video streams in HDTV 720p (1280x720) at up to 60 frames per second (60 Hz mode) or 50 frames per second (50 Hz mode) using H.264 or Motion JPEG.
iv. The camera shall support H.264 Baseline, Main and High Profile.
v. The H.264 implementation shall include both unicast and multicast functionality and support Maximum Bit Rate (MBR) as well as Variable Bit Rate (VBR).
vi. The camera shall support H.264 with automatic scene adaptive bitrate control.
vii. The camera shall for its H.264 implementation support scene adaptive bitrate control with automatic dynamic ROI to reduce bitrate in un-prioritized regions in order to lowering bandwidth and storage requirements.

8.13.10.6.4 Pan Tilt functionality

i. The camera shall provide more than 255 manually set preset positions.
ii. The camera shall provide e-flip functionality, which will automatically rotate the image 180° electronically when following a moving object passing under the camera.
iii. The camera shall provide a guard tour functionality, which allows the dome to automatically move between selected presets using an individual speed and viewing time for each preset.
iv. The camera shall be able to record a custom PTZ tour, operated using an input device such as a joystick, mouse or keyboard, and then use and recall this as a guard tour.
v. The camera shall be able to detect and automatically follow moving objects in the cameras field of view.
vi. The camera shall provide On-screen directional indicator (OSDI) functionality.
vii. The camera shall be equipped with accurate high-speed pan-tilt functionality with 360° endless pan range and a 180° tilt range.
viii. The camera shall provide pan and tilt speed between 0.05° - 450°/sec.

8.13.10.6.5 Event functionality

i. The camera shall be equipped with an integrated event functionality, which can be trigged by:

    a. Video Motion Detection
    b. Live Stream Accessed
    c. Manual Trigger/Virtual Inputs
    d. Fan malfunctioning
    e. Casing Open
    f. Heater malfunctioning
    g. Temperature
    h. PTZ functionality
    i. Embedded third party applications
    j. Edge storage disruption detection
    k. Shock Detected

ii. The cameras response to a trigged event shall include:

    a. Send notification, using HTTP, HTTPS, TCP, SNMP trap or email
    b. Send images, using FTP, HTTP, HTTPS, network share or email
    c. Send video clip, using FTP, HTTP, HTTPS, network share or email
    d. Recording to local storage and/or network attached storage
    e. Day/Night Vision Mode
    f. PTZ control functionality
    g. Overlay Text

8.13.10.6.6 Storage

i. The camera shall be equipped with a video buffer for saving pre- and post-alarm images and shall have a SD card slot to support local storage of video.
ii. The camera shall support recording to network attached storage.

8.13.10.6.7 Security

i. To secure access to the unit as well as provided content, the unit shall support HTTPS, SSL/TLS and IEEE802.1X authentication.
ii. The camera shall provide centralized certificate management, with both pre-installed CA certificates and the ability to upload additional CA certificates. The certificates shall be signed by an organization providing digital trust services.
iii. The camera shall support IP address filtering and include at least three different levels of password security.

8.13.10.6.8 Product installation & maintenance

i. The camera shall include a customizable pixel counter functionality, identifying the size of objects in number of pixels.
ii. The camera shall allow updates of the software (firmware) over the network, using FTP or HTTP.
iii. The camera shall support time synchronization via NTP server.
iv. The camera shall provide a log file, containing information about all users connecting to the unit since last restart. The file shall include information about connecting IP address and the time of connecting.
v. The camera shall be monitored by a Watchdog functionality, which shall automatically re-initiate processes or restart the unit if a malfunction is detected.
vi. The camera shall send a notification when the unit has re-booted and all services are initialized.

8.13.10.6.9 API & applications

i. The unit shall contain a built-in web server making video, audio and configuration available in a standard browser environment using HTTP.
ii. The camera shall be fully supported by open and published API (Application Programmers Interface) providing necessary information for integration of functionality into third party applications.
iii. Cameras shall comply with relevant ONVIF profile as defined by the ONVIF Organization.

8.13.10.6.10 Network functionality

i. The camera shall support both static IP addresses and addresses from a DHCP-server.
ii. The camera shall support both IPv4 and IPv6.
iii. The camera shall incorporate support for Quality of Service (QoS).
iv. The camera shall incorporate support for Bonjour.

8.13.10.6.11 Other functionality

i. The camera shall provide text overlay ability, including date and time.
ii. The camera shall have the ability to apply a graphical image as an overlay image in the video stream.
iii. The camera shall have the ability to provide up to 32 individual 3D privacy masks to the image.

8.13.10.6.12 Mechanics & environmental

i. The camera shall be manufactured with an IP66-, NEMA 4X- and IK10-rated metal casing (aluminum).

ii. The camera enclosure shall include the following:

   a. Sunshield
   b. Temperature sensors
   c. Heaters
   d. Fans

iii. Operate in a temperature range of:

   a. 30 W midspan -20°C to 50°C (-4°F to 122°F)
   b. 60 W midspan -50°C to 50°C (-58°F to 122°F)
   c. Maximum temperature (intermittent): 60°C (140°F)

iv. The camera shall be equipped with Arctic Temperature Control, allowing camera start-up at temperatures down to -40°C (-40°F).
v. Operate in a humidity range of 10–100% RH (condensing).

8.13.10.6.13 Connectors

i. The camera shall be equipped with a RJ45 10BASE-T/100BASE-TX PoE Ethernet port.

8.13.10.6.14 Power

i. 100-240 V AC / 50-60 Hz, max 60 W – provided to the camera through the network cable by a separate injector, supplied with the camera.

8.13.10.6.15 Standards & Regulations

i. The specified unit shall meet product safety standards as defined in IEC/EN/UL 60950-1
ii. The specified unit shall meet product safety standards as defined in IEC/EN/UL 60950-22
iii. The camera shall meet relevant parts of SMPTE 296M (HDTV 720p)
iv. The camera shall meet relevant parts of SMPTE 274M (HDTV 1080p)
v. The camera shall meet ISO/IEC 14496-10 Advanced Video Coding (H.264)
vi. The specified unit shall carry the following EMC approvals:

   a. EN 55022 Class A
   b. EN 55024
   c. FCC Part 15 - Subpart A
   d. VCCI Class A
   e. RCM AS/NZS CISPR 22 Class A
   f. ICES-003 Class A
   g. KCC KN32 Class A
   h. KN35

vii. The camera shall meet the following mechanical environmental standards:

   a. IEC/EN 60529 IP66
   b. NEMA 250 Type 4X
   c. NEMA TS-2-2003 v02.06 Subsection 2.2.7, 2.2.8, 2.2.9
   d. IEC 62262 IK10
   e. IEC 60721-4-3
   f. IEC 60068-2-1
   g. IEC 60068-2-2
   h. IEC 60068-2-6
   i. IEC 60068-2-14
   j. IEC 60068-2-27
   k. IEC 60068-2-30
   l. IEC 60068-2-60
   m. IEC 60068-2-78
   n. ISO 4892-2

viii. The camera shall meet the following railway environmental standards:

a. EN 50121-4
b. IEC 62236-4

ix. The camera shall meet the following standards:

a. IEEE 802.1X (Authentication)
b. IPv4 (RFC 791)
c. IPv6 (RFC 2460)
d. QoS – DiffServ (RFC 2475)

8.13.10.6.16 Sustainability

i. The specified unit shall be manufactured in accordance with ISO 14001.
ii. The specified unit shall be compliant with the EU directives 2011/65/EU (RoHS) and 2012/19/EU (WEEE).
iii. The specified unit shall be compliant with the EU regulation 1907/2006 (REACH).
iv. The specified unit shall be PVC-free in accordance with IEC 61249-2-21.
v. The manufacturer shall have signed and support the UN Global Compact initiative as defined by United Nations https://www.unglobalcompact.org/

8.13.10.6.17 Installation, Warranty & Recognitions

i. The specified unit shall be backed by a minimum of three-year manufacturer warranty.
ii. The manufacturer shall provide the option of extended warranty for the camera. The optional extended warranty shall be available in two-year extension blocks for a total warranty period of maximum five years.
iii. The contractor or designated subcontractor shall submit credentials of completed manufacturer certification, verified by a third party organization, as proof of the knowledge.
iv. All equipment shall be tested and configured in accordance with instructions provided by the manufacturer prior to installation.
v. All firmware found in products shall be the latest and most up-to-date provided by the manufacturer, or of a version as specified by the provider of the Video Management Application (VMA) or Network Video Recorder (NVR).

8.13.10.7 PAN/TILT/ZOOM (PTZ) Cameras

All PTZ controlled cameras must be integrated domes. The camera dome drive system must consist of a discreet, miniature camera dome, a variable speed (high speed) pan and tilt drive unit with continuous 360° rotation, a high resolution 1/4-inch colour CCD/B&W camera, an optical and digital zoom, auto focusing, motorized zoom lens, and an integral receiver. In addition to the forgoing, the following features must be provided:

i. Variable speed capabilities ranging from a smooth, fast pan motion of 360° per second to a smooth “creep” speed of 0.1° per second.
ii. Be capable of 360° rotation with an “auto flip” feature that allows the dome to rotate 180° and reposition itself for uninterrupted viewing of any subject that passes directly beneath the dome.
iii. Dome back boxes must include built-in memory to store camera and location specific dome settings, including labels, presets, patterns, and zones. These settings are automatically downloaded if and when a dome is replaced.
iv. Domes must contain on-screen, user-defined programmable patterns that include pan, tilt, zoom, and preset functions.
v. Domes must be individually programmable to initiate a stored pattern, or to go to an associated pre-set when an alarm is received. Following the alarm acknowledgement, the dome must return to a previously programmed state or to its previous position before the alarm was activated.

vi. The dome must incorporate independent automatic Colour-to-Black & White switching modes for automatic switchover from colour in daytime, to high sensitivity black and white at night.
vii. The CCD must be a 1/4-inch image sensor with 724 x 494 effective pixels, providing 470-line resolution.
viii. Colour mode sensitivity must be 0.008 foot-candles (0.08 lx) at 1/2-sec shutter speed;
ix. Black & White mode must be 0.0013 foot-candles (0.013 lx) at 1/2-sec shutter speed.
x. Signal to noise ratio must be 50 dB or greater
xi. Power requirements: 70 VA at 24 V AC
xii. Standard of Acceptance: Pelco Spectra III Model SD53VBW-PG-E1

In addition to the above listed camera, IP based cameras are currently being evaluated and may be considered for installation in future projects.

8.13.10.8 Camera Lenses / Optics

All specified cameras include factory-installed lenses / optics which have been designed to function correctly with the devices including all necessary feature support. Where applicable, lens options, including specific focal-lengths, are to be selected specifically to suit the installation and field-of-view requirements. No after-market lenses / optics are to be used on new cameras.

		Distance to Object/Focal Length				
Strategy	Image Size	25'	50'	75'	100'	150'
Monitoring	5%	1.3 mm	2.5 mm	3.8 mm	5 mm	7.5 mm
Detection	10%	2.5 mm	5 mm	7.5 mm	10 mm	15 mm
Recognition	50%	12.5 mm	25 mm	38 mm	50 mm	75 mm
Identification	120%	30 mm	60 mm	90 mm	120 mm	180 mm

Figure 7 - Varifocal Lens Selection

Model	Zoom Ratio	Focal Length	Aperture
13VD1-3	2.1X	1.6 – 3.4 mm	1.4 - 360
13VD2.5-6	2.4X	2.5 – 6 mm	1.4 – 125
13VD2.8-12	4.3X	2.8 – 12 mm	1.4 – 360
13VD3-8	2.7X	3 – 8 mm	1.4 – 360
13VD3.5-8	2.3X	3.5 – 8 mm	1.4 – 90
13VD5-40	8X	5 – 40 mm	1.6 – 360
13VD5-50	10X	5 – 50 mm	1.4 - 185
13VD5.5-82	15X	5.5 – 82 mm	1.8 – 360

Figure 8 - Varifocal Lens Models

8.13.11 Required site coverage / CCTV Camera Views

Camera placements, as described herein, shall provide sufficient detail to clearly identify individuals and objects within the required fields-of-view. The actual resolution and pixels-on-target vary, depending upon the specific location. PTZ cameras are utilized to allow for closer inspection of areas of concern, allowing for a reduction in the overall number of fixed cameras in any given coverage area.

During peak hour and special events, it is essential that LRT Operations use camera views to determine passenger load requirements at selected stations in order to determine if additional trains are required.

8.13.11.1 Security

Camera coverage is required for the following security sensitive areas:

i. Entrances to cash vaults (fixed)
ii. Fare equipment (may be either fixed camera or a PTZ camera preset position - must provide a view of the front of the TVM)
iii. Platform areas
iv. Emergency telephones shall be clearly visible either in a fixed camera view or a PTZ camera Preset position
v. Panic Buttons, where applicable, shall be clearly visible within either a fixed camera view or in a PTZ camera Preset position
vi. Elevators require fixed camera coverage of each opening, as well as a fixed (wide-angle) camera within the car
vii. Escalators require fixed camera coverage of the entire run in a single view as well as both landings (top and bottom) in separate views – 3 cameras per escalator
viii. All entrance doors
ix. Washroom entrance doors (cameras to be fixed type) – must provide a clear view of the door as well as the “Occupied” signage
x. Tunnel and Grade Separation portals
xi. Continuous coverage of pedway entrances and exits to all levels
xii. Continuous coverage of walkway entrances and exits to all levels
xiii. Continuous coverage of stairwell entrances and exits to all levels (cameras to be fixed type)
xiv. Surface parking areas
xv. Parking Lot entrances and exits require fixed-view License Plate Recognition cameras positioned to allow capture of vehicle license plates entering and exiting the lots

Coverage must be provided with the objective of eliminating all blind or hidden areas. The appropriate infrastructure must be added to light standards to allow for possible camera installation. Activity must be identifiable for a distance of up to 45 m.

Camera views of fare collection and fare paid areas are for the purpose of ensuring reliable and free flowing fare collection and to detect any flow obstruction.

Alarms generated from emergency phones, emergency call stations, ticket vending machines, vaults, elevators or washrooms must immediately display their respective camera views.

Security must be able to display and record simultaneously a minimum of five emergencies or alarm situations. LRT Security requires the ability to quickly view any camera image on the system and record if desired.

8.13.11.2 Operations

In addition to camera locations detailed for Security use, ETS has designated certain operational areas which are to have coverage / visibility though the CCTV system.

i. PA/VMS Signs on LRT Platforms must have clear visibility of the entire sign face via a PTZ camera – each side of double-faced signs, where applicable.
ii. Clock tower and Parking Lot signs must be visible via a PTZ camera.
iii. Certain Designated Employees Access doors or Entrances.
iv. Certain Areas wherein work is performed on sensitive equipment such as:

    a. Substations (access and inner areas).
    b. Communications Rooms (access and inner area).

c. Signals Rooms (access and inner area).

v. Other areas as defined or requested by ETS personnel or departments as required.
vi. All level crossings in the LRT system, both pedestrian and vehicular, shall be covered with a fixed view camera to allow monitoring of crossing arm position and post-incident investigations – multiple cameras or a multi-head device may be required to provide sufficient viewing detail.

8.13.11.3 Camera Enclosures

All specified camera types incorporate dome type enclosures which are to be installed in accordance with the manufacturer's specific instructions, including use of grounding connections, sealing grommets etc. No alternate enclosures should be required or utilized as these may compromise the IP66, IP67 or IK10 ratings carried by different cameras.

8.13.11.4 Camera Mounts

Camera mounts shall be designed specifically for use with the specified cameras. Placement of these mounts must allow the camera to fulfill its role as defined previously, while taking into consideration maintenance requirements. The following brackets are suitable dependent on the type of surface where they are to be installed:

i. Ceiling Mounts

a. Recessed Mount
b. Surface Mount
c. Pendant Mount

ii. Wall Mounts

a. Junction Box Adapter
b. Surface Mount Plate
c. Enclosure (Cabinet)
d. Arm

iii. Corner Mount Adapter

Corner adapters must be utilized to allow the wall mount to be attached to the corner of a building where required. In instances where pole mounting is required, suitable pole mount adaptors must be utilized.

iv. Parapet Mount

Parapet mounts must be utilized at locations where mounting is on a flat roof or to smooth horizontal surfaces. Sufficient height is required to clear the parapet and 360° rotation must be available for service and maintenance.

8.13.11.5 Lighting / Illumination

Typical installations shall not require additions or modifications to the lighting in place, unless otherwise provided for under a renovation or remodeling project. In the event that a camera is to be located in a room or location where there is zero-light condition, consideration may be given to install dedicated lighting such as Infrared or White-Light LED Illuminators. In such a case, the illuminator shall be specifically designed to operate with the specified camera type for the specific location and shall selected according to the size and configuration of the area to be viewed. Acceptable illuminator models (as of August 2016) are Axis T90 Series.

8.13.11.6 Space Requirements

8.13.11.6.1 Spatial Considerations

All CCTV equipment except cameras must be located in the Communication room (refer to Section 8.6.4) and interfaced to the associated monitoring equipment in the ETS Control Centre.

8.13.11.6.2 Equipment Racks

Racks must comply with E.I.A. specifications for rack mounting ANSI/EIA standard RS-310. In addition, the following requirements must be met:

i. Be four (4) post style
ii. Be of welded metal construction with front and rear locking doors
iii. Be louvered where required to provide proper ventilation
iv. Have built-in space for wire and cable management and have cable access ports in the top and bottom panels
v. Be sized to accommodate distribution equipment and cabling
vi. Power bars integral to the enclosure

8.13.11.7 Labeling and Identification

i. All cabling and conductors must be clearly identified by using typed (non-hand written) labels.
ii. All equipment racks or enclosures must be lamacoid labeled.
iii. All alarm racks/enclosures must be provided with input/output directories and wiring diagrams.
iv. All termination enclosures must be provided with input/output wiring charts.

8.13.11.8 Power Supply

8.13.11.8.1 Primary Power

i. All CCTV devices with PoE powering option should be powered via PoE as described in Section 8.7.7 of these Design Guidelines.
ii. Any CCTV devices requiring AC power, either directly or via a plug-in type power supply / adapter, should be powered from the location's central UPS
iii. Any deviation from these two configurations shall require approval from ETS Communications Group and shall include clear and detailed documentation including:

    a. Location of Power Supply / Adapter
    b. AC Circuit to which connection is made
    c. Location of Electrical Breaker Panel feeding AC Circuit

8.13.11.8.2 (Emergency) Power

i. Conditioned power must be supplied from UPS back up power for all locations where CPU's are utilized. UPS back up power must be supplied from the emergency power source.

8.13.12 Cabling methods

8.13.12.1 Conduit, Cable, and Other Related Accessories

i. All IP-based CCTV devices shall be subject to all Ethernet Device cabling requirements as detailed in Section 8.8 of these Design Guidelines.
ii. Installation and termination of fibre optic cable must comply with Section 8.8.4.3 of these Design Guidelines.

iii. Installation of conduit and cable pathways must comply with Section 8.8 of these Design Guidelines.
iv. Installation of associated electrical cabling for AC circuits must comply with the latest editions of the Alberta Building Code, Canadian Electrical Code and Canadian Electrical Safety Code.

8.13.13 Camera Poles

Dedicated camera mounting pole for installation of cameras are to be comprised of:

i. Square section pole measuring 4.75" x 4.75"
ii. Pole shall be 18' in height (total including base)
iii. Mounting base shall be 13" x 13"
iv. Extruded Aluminum with Powder Coat finish

Pole shall mount directly onto NEMA 4 rated base box measuring 15" x 18" x 22.5" (See Moog P1800 specification for further detail).

Where applicable, the pole should include the internal Camera Lowering Mechanism.

Pole shall include internal Cat 6 cabling from manufacturer to accommodate connection of Camera to base of pole while allowing necessary cable retraction during lowering process (See Moog PV18N specification for further detail).

In cases where a single pole is to be used for mounting two devices the manufacturer's dual-mount adapter shall be used. For fixed poles this would be a separate accessory (see Moog PV8); in cases using Lowering Mechanism, the pole shal be replaced with the Dual-Mount model (see Moog PV18NX2 specification for further detail) which includes dual mounting adapter and 2 internal Cat 6 cables.

In all cases, poles should be equipped with manufacturer’s Lightning Rod (see Moog PV1) and Anchoring Jig (see Moog PV4).

8.14 PA/VMS

8.14.1 General

This section presents an overview of the existing LRT PA System on the entire LRT system.

The system consists of three parts: the amplifier and live announcement system, the train arrival and scheduled message system and the automated public message and visual display maintenance system. The first one is provided by OpenAccess from Australia, the second one is provided by Thales in conjunction with the CBTC system and the last one is an in house developed system.

The Guidelines presented here apply to the Bus Transit Center PA as well. The OpenAccess system is to be used in all bus transit centers for audio because it can be integrated into the same system as the LRT uses. The in house system controls all of the clock towers and parking lot LED signs used in all transit centers.

The PA system is to provide the capability for the control center staff to make announcements to patrons in all LRT stations and Bus Transit Centers. Interconnected to the PA system is the VMS, which displays visual messages at LRT station platforms.

8.14.2 Existing PA/VMS System

All stations on the Edmonton LRT System are equipped with amplified public address voice messaging systems. Each of these stations has loudspeakers on the Platform and Concourse levels. Several stations also have loudspeaker coverage in connecting public pedways, as well as landing levels (i.e. at University Station).

Loudspeakers should operate in a zoned manner to allow individual area announcements, as well as multi-zones and 'All-Call' general announcements, from Operator Work Stations (OWS) at the ETS Control Centre and other selected locations. Station loudspeaker paging zones are accessed by the OWS at the ETS Control Centre.

The Public Address System (PA) and Variable Message Sign System (VMS) must support ETS current and long-term communications needs for Audio and Visual services. They must meet current and future technology and system expansion requirements.

The key feature of this PA/VMS system must be its compatibility and interface to the existing train control system and seamless integration with the communication network for the existing stations.

The PA/VMS system is comprised of automated train arrival announcements and centrally controlled passenger announcements distributed via IP for both audio, using Voice over IP (VoIP), and text for sign displays. The main Cisco network is the backhaul that allows for this system to function.

The PA/VMS is relying on the existing Communications Based Train Control (CBTC) system to obtain real time train movement and route information. The train arrival announcements will be triggered by the train occupancy of the pre-selected track circuits on the approach (from either direction or either tracks where track switches are present) to each station. The estimated arrival time is displayed on the station's Variable Message Signs at all stations except terminus locations. At terminus locations, the estimated departure time is displayed.

The following is an itemized functionality of the PA/VMS system:

i. Automatically announces and displays the arrival time (30 seconds prior to arrival at station), track, and terminus location of the next approaching train. This information will apply to all revenue trains which are on time or delayed.
ii. Displays the expected time of arrival (ETA) of a minimum of two approaching trains (in minutes) at the same side of the platform and destination automatically in conjunction with the default message. The default message must be "Track 1 (or 2) / Time". The display should read: "Terminus station for train (e.g. Clareview) – Estimated arrival time (e.g. 5 min)". The display should be able to indicate arrival times for 2 trains in any one direction. At terminus stations, the estimated time to departure will be displayed. The default message is controlled by the sign management system developed in house.
iii. The software uses the occupancy on a given track circuit with the train ID and the destination (from the CBTC system) in order to make the train announcement. Information will be updated with each successive track circuit.
iv. The software also uses CBTC schedule and track circuit information data (e.g. track block and lined routes) to calculate accurate ETA of the approaching trains and target station platforms.

In addition to automated train announcements, PA/VMS software provides functionality that supports Canned (predetermined), Ad –hoc (from typed input), and Live (from microphone input) announcements, both visual and/or audio:

i. Creation, scheduling, distribution, and monitoring of audio/visual announcements.
    a. Live
    b. Canned
    c. Ad-hoc
ii. Creation and presentation of automated announcements based on inputs from the CBTC train dispatch system.
iii. PA/VMS system configuration, monitoring and test e.g. volume can be tailored by station and by schedule.
iv. Playback and retrieval of past live announcements.

The PA/VMS Central Servers perform the following functions:

i. Aggregate train movement, route and schedule information from the CTC
ii. Manage all communication to stations
iii. Perform necessary queuing and prioritization of messages delivered to stations
iv. Allow for message preemption and suspension
v. Maintain a real-time database of selected set of states of managed devices at the station level
vi. Log all messages, errors, and state changes of the system

8.14.3 Applicable Codes, Regulations and Standards

All design work, equipment and material selection must conform to or exceed the latest editions of codes, standards and regulations issued by:

- Canadian Electrical Code (CEC)
- CSA Standards
- Electrical & Electronics Manufacturers (EEMAC) Standards
- Electronic Industries/Telecommunications Industries Associations (EIA/TIA)
- EIA/TIA RS160-51 – Sound Systems
- EIA/TIA SE103-49 – Speakers for Sound Equipment
- IEEE – C62.41 Surge Voltages in Low – Voltage AC Power Circuits
- Underwriters Laboratories (CUL) Inc. Standards

In the case of a conflict between standards or regulations the stricter requirement will apply.

8.14.4 Functional Requirements

Live and prerecorded announcements are required for ETS LRT Security and Operations messages to the public.

As an overall goal, the public address system must provide ability for clear transmission of amplified voice messages throughout all designated public areas of LRT stations.

To meet this goal, as stated above, the public address system must meet the following general requirements:

i. The acoustic quality of voice messages must be clear, intelligible and easy to understand.
ii. The system operation must be simple, intuitive and easy to operate.
iii. Has the ability to play pre-recorded messages and announcements.
iv. System reliability must be assured by good technical design, audio products that represent current technology in design and construction, and high industry installation and construction standards and practices.
v. For any additions and renovations to existing stations, or the construction of new stations, PA facilities must comply with the existing PA network control equipment and signaling standards.
vi. The system must be integrated into the web and allow for automatic reading and writing of twitter, Facebook and other social media messaging to either sync messages on signs with social media or take social media messages and display on the signs. In addition to social media, other online sources need to be integrated such as weather, weather alerts, amber alerts, emergency alerts, parking bans, fire bans, sporting events, and other ETS related advertising messages. The ability to send SMS, email and updates to websites is required as well. All of these abilities must be modular and fully configurable by ETS staff.

From a maintainability perspective, the system must have the following capabilities:

i. Ability to add new signs and amplifiers without involving the manufacturer or installer of the system
ii. Ability to monitor the status of all signs, amplifiers, speaker health, and alert to problems as soon as they are detected.
iii. Must have an open API that can used to access and push information between systems as needed by third party systems.
iv. Must have as few components as possible and combine as many functions into a single integrated unit per station.
v. Must have the ability to centrally maintain all end device configurations and be able to push these out as needed.
vi. Must have the ability to verify and ensure the time displayed on all VMS signs is accurate and automatically rectify and alert if the time is off.

8.14.5 Location Considerations

Loudspeaker placement must include train level platform, concourse and connecting pedways. Configuration of loudspeaker zones will vary according to station architectural design. Speaker type and placement must minimize the sound spill of amplified messages into adjacent residential neighborhoods. As a minimum criterion, the system must comply with the noise provisions of the City of Edmonton Community Standards Bylaw 14600.

8.14.6 System and Component Design Requirements

In order to meet the public address system overall goals stated in 8.15.4, the following guidelines should be met.

8.14.6.1 Acoustic Conditions and Treatment

Professional products must be selected in order to ensure that the PA system delivers high speech intelligibility, even when operating in a reverberant and raised ambient noise environment.

Coordination with the station design consultants is required regarding the following:

Station materials and finishes will be limited to those that reduce acoustic reflection and complement the goal of maximizing the public address system performance. As a design goal, the RT60 must be kept to less than 1 second.

Note: RT60 is defined as the time it takes sound to be reduced by 60 dB.

Should RT60 be more than 1 second, computerized models, such as EASE (Enhanced Acoustic Simulator for Engineers by Renkus-Heinz), should be utilized to determine optimal speaker location and use of acoustical treatment to achieve intelligible messaging. The resulting design must produce messages as intelligible as possible.

8.14.6.2 System Acoustic Performance

Loudspeakers should be placed to provide consistent and uniform sound levels throughout designated station areas. The following acoustic performance levels should be met:

i. Sound levels should be 6 to 10 decibels (dB) above ambient noise levels to assure a high degree of speech intelligibility.
ii. Typical ambient sound pressure levels (SPL) to be 75 dB (2 dB) at 1.2 m above floor level.
iii. System must meet the noise provisions of the Community Standards Bylaw.
iv. Reverb level at platform, concourse and pedways should be less than 1.0 seconds @ 500 Hz. (refer to University Station Upgrade PA and Acoustic Report).
v. Provide adequate dynamic range and system gain to ensure intelligible speech quality.

vi. Overall system hum and noise to be lower than –70 dBm. Harmonic distortion to be less than 2% measured at stated operating sound pressure levels and specified frequency response.
vii. Provide PA system frequency response uniform from 200 Hz to 6000 Hz 2 dB, measured with a 1/3 octave broadband signal.
viii. Provide Automatic Gain and Compression features to assure speech levels from loudspeakers to public areas remain constant within 2 decibels SPL.
ix. The overall minimum performance value must be 0.55 or better on a Speech Transmission Index (STI) scale.

8.14.6.3 Control Network

In order to ensure compatibility, new station or system modifications must be in accordance with and fit into the existing system design concept as illustrated in Appendix C.

8.14.6.4 System Servers and Network Capacity

Servers and general capacity on the system must be sized to handle all the users, stations, and other various equipment plus 20%. Messaging must not have a delay of more than 1 second, 1% of the time, from any terminal at peak usage. Message throughput must be measured from the operator to message delivery at the desired location with all messages being of the same priority.

8.14.6.5 Loudspeakers and Placements

The technical performance characteristics, architectural and mounting features of the loudspeaker must match the acoustic conditions and treatment of the area requiring amplified public address announcements. Loudspeakers should be selected that provide a tight pattern control for reverberant high ceiling areas.

Speaker placement should meet the following criteria:

i. Sound should project from one direction only. Do not locate speakers in ceilings and walls in the same area. Do not locate speakers on walls and directed towards each other.
ii. Provide directional dispersion speakers, with tight pattern control, in a distributed overhead loudspeaker configuration. Sound should not reflect from room walls.
iii. Spacing must assure no dead spots or sound pressure level (SPL) variance of more than 2 dB SPL.
iv. Weatherproof loudspeakers and mounting fixtures must be provided for all outdoor locations.
v. Speakers must be placed at a minimum height of 3050 mm from platform and fitted with vandal resistant housing and hardware.
vi. Outdoor loudspeaker direction must minimize any significant sound spill to adjacent neighborhoods.
vii. Speakers are to be tapped at 5 W

Consideration should be given to the use of PA automatic volume control systems in stations.

Ideally the system should be able to automatically compensate for high wind or a high background (crowd, traffic) noise environment. Factors influencing installation will be based upon cost, reliability, and performance in other similar situations, either locally, or in LRT stations in other cities.

Consideration should also be given to using IP speakers. This has not been done to date in any LRT system but may be a viable alternative going forward. This will have to be integrated into the existing system however which may limit the possibilities with IP speakers.

8.14.6.6 Signal Processing

To assure speech clarity in all loudspeaker areas professional grade Digital Signal Processing (DSP) with full audio spectrum tuning ability must be provided.

To assure consistent voice levels throughout loudspeaker areas, electronic audio signal processing must include automatic signal “compression” and “limiting” features.

These features are to be provided within the amplifier.

8.14.6.7 Equipment Cabinets and Accessories

All PA/VMS headend equipment must be installed in the main communications cabinet with all other communications system components.

8.14.6.8 Conduit and Wiring

All PA wire, cable and connectors are to be run in electrical conduit, junction boxes and backboxes.

Refer to Section 8.8 for general cable requirements.

Distributed loudspeaker wiring cable must be no less than #16 AWG. Audio cable must be twisted pair, complete with 100% shield and grounded only at equipment cabinet.

Low level audio signal cable must not run in the same conduit as high level loudspeaker cable.

All cable connections must be made on approved clamp terminal wiring blocks. Field wiring to tie together multiple speaker zones must be accomplished on terminal blocks, not on the terminal screws of the amplifier.

8.14.7 Interfacing Requirements

8.14.7.1 Existing PA Network

Station control assignments must be coordinated to comply with existing network configuration and operation.

8.14.7.2 Train Signal System –Train Arrival/Departure

PIDS must interface with existing CBTC for automatic train arrival messages as illustrated in the following figure.

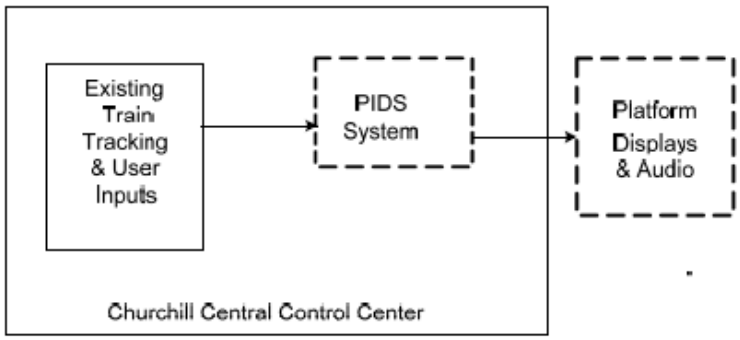

Figure 9 - CBTC under “Existing train tracking & user inputs”

8.14.8 Amplifiers

Amplifiers are required to provide suitable acoustic performance and sound pressure levels (SPL) for intelligible voice announcements, as described by Section 8.14.6.2.

Audio amplifiers to be specified must have the following features:

i. Meet professional technical performance specifications.
ii. Provide overload protection and convection cooling (no cooling fan).
iii. Power rating is suitable for individual loudspeaker zones.
iv. Integrated 70 V constant line operation.
v. Ability to monitor the health of all connected speaker zones
vi. Integrated DSP and ambient noise sensing functions
vii. Integrated ability to play out messages
viii. Network connected, remotely manageable and configurable
ix. Connect to a central backend system that monitors all amplifiers on the system

Total number of amplifier output channels must equal or exceed the number of logical zones within the station.

The loudspeaker circuit loading must be designed with a minimum 20% power margin. The amplifier power distribution is to be 70 volt constant current method.

Standard of acceptance: Open Access Netspire Network Access Controller

8.14.9 Signs

8.14.9.1 Variable Message Signs

Variable Message Signs (VMS) are provided to augment the PA system with visual messaging. In general, visual messaging must be coordinated with audio messaging to improve intelligibility of messages for the general public and the hearing impaired community. Additionally, VMS must be used for stored repetitive messaging, such as public service announcements, or in neighborhoods where audio messaging is either not desirable or not acceptable.

VMS messaging must be controlled from the overall PIDS system on an individual sign basis.

The same OWS must control both the PA and VMS, including the coordination of joint messaging.

In order to remain consistent with the existing system signage, designs must use Daktronics Galaxy 1000 Series displays with Venus 1500 Protocol, or approved equal, conforming to the following:

i. 48 x 144 LED matrix
ii. Min Text Height 100 mm
iii. NEMA 4 Rated, Double-Faced Cabinet
iv. Cabinet Dimensions: 406 mm (16”)H x 1320 mm (52”)W x 36 mm(14”)D
v. Two (2) NEMA 4 Rated Gaskets for Power and Signals Knockouts
vi. Internal DSL/Ethernet Modem Mounting Bracket
vii. LED Colour: Amber with minimum life of 50,000 hours (50% of original brightness)
viii. Automatic ambient light compensation
ix. Provided with sunshield and glare resistant coating, as need
x. Five (5) Year Warranty

Each Daktronics sign installed at platform level must have a two controller design. One controller used to control the upper two thirds of the sign and the second controller used to control the bottom third of the sign. If the functionality of all pieces of the PA system described

above are integrated into one system, these signs could operate with one controller. This is not the case today however.

In addition, to the signs on the platform, ETS uses three other sign types: Clock towers, parking lots, and third-party advertising. These signs (except for the third party advertising) are also Daktronics signs using Venus 1500 protocol. Spec sheets for the different sign types used by ETS

8.14.9.2 Connectivity

At each station, the VMS signs must be connected via direct Cat 6 connections to the nearest ETS network presence. The network device is then programmed with the PA/VMS service for access to PA/VMS resources only. This configuration may be modified if the Communications Room is centrally located on the platform or as approved by ETS staff.

8.14.9.3 Power Supply

8.14.9.3.1 Primary Power

All VMS must be provided from the station primary power supply. All VMS equipment power must be on the same phase.

8.14.9.3.2 Secondary (Emergency) Power

Conditioned power must be supplied from UPS back up power for all signs. UPS back up power must be supplied from the emergency power source.

8.14.10 Installation and Design of Signs

The following guidelines and considerations for sign installation apply for installation and design work with the Daktronics signs:

i. No overhead single sided signs on platform areas (unless mounted to a wall)
ii. Outdoor signs should be under a rain shield
iii. All signs should be visible to a camera on both sides (note that PTZ cameras cannot look upwards from their mounting height)
iv. VMS signs should not be in line with way find signs as they block sight lines for each other
v. Light from scrolling VMS signs can give false positives to BMS motion sensors. This effect is more pronounced at night when the station's lights are off as the VMS light is visible for a longer distance.
vi. VMS signs should be below catenary height and at least 2 m from high voltage lines to allow maintenance personnel to access them without a traction power shutdown (unless a physical barrier is in place as in Coliseum and Stadium installs).
vii. Enough signs must be mounted to ensure all areas of the platform can see a VMS sign
viii. The signs should be visible to patrons entering a platform from any entrance
ix. Signs should be mounted high enough that patrons can not touch them even if climbing on structures
x. All enclosures should be NEMA 4 and use water tight connectors when wiring and be able to withstand power washing at any location without water ingress
xi. Conduits or connections which run to the signs but originate from a high moisture area (under a platform or other unheated or unconditioned space) should be sealed after installation
xii. VMS signs should be on BMS controlled power circuits for remote power cycling.

8.14.11 Naming Conventions

Naming conventions for the various systems and system components are described in the released document "Naming Conventions Best Common Practice, Issue 1.0", dated January 2016.

8.14.12 Microphones

All microphones to interface with the PA system must be PoE powered IP microphones. These devices must integrate directly with the PA system and be monitored and configured from a central system the same as the amplifiers.

8.14.13 Integration to the Central Phone System

The PA/VMS should also have the ability to interface directly to the phone system to support the ability for users in control to pick up the desk phone and be able to make announcements in addition to the IP microphones.

8.15 TELEPHONE SYSTEMS

8.15.1 General

The telephone systems to be installed on the LRT system are classified as follows:

i. Right-of Way (ROW) Phones
ii. Emergency Phones*
iii. Elevator Phones*
iv. Washroom Access Phones*
v. Information Phones*
vi. Public Pay Phones*
vii. Staff Service Phones

***Note:** Phones available for public use are designated by asterisk.

8.15.2 Functional and Phone Equipment Requirements

Nortel CS-1000 telephone switches are located in the ETS Control Centre (Churchill), Health Sciences Station, and Southgate Station. Each station on the Metro line has its own CS-1000 expansion chassis that is used for all phones local to each station. The CS-1000 is the electronic device that routes or switches telephone calls to the appropriate internal phone or to one of the available external telephone lines. This telephone switch manages the ROW phones, emergency phones, elevator help phones, information phones and washroom access phones.

These switches provide telephone access and switching services for the control center staff to all staff phones along the LRT ROW, elevator access phones, service space phones, washroom access phones, and for Emergency Help phones. The LRT PBX system has over 500 lines, all managed by the Nortel CS-1000 network.

Standard of Acceptance for phone sets: Meridian Model #8004.

Information phones "ring down" to the ETS Control Centre. The call is routed to the ETS Customer Services Section via the Nortel CS-1000 switch network.

A CS-1000 switch has been installed in Health Sciences Station to service telephones south of the D.B. Menzies bridge to South Campus Station. Another CS-1000 switch is to be installed in Southgate Station to service all telephones south of South Campus Station to Century Park Station. For future extensions, multiple CS-1000 switches may be networked together over the communication system's 144 fibre cable backbone using network single mode fibre optic transceivers to connect the main switch located at the ETS Control Centre to

remote switches. For phone service at stations not housing a PBX, a 200 pair copper cable will be used between all stations to provide VF pathway to the nearest PBX.

This topology is in the process of being migrated to VoIP and this topology will need to be updated in the design guidelines when the new topology is clear.

8.15.3 Naming Conventions

Naming conventions for the various systems and system components are described in the released document “Naming Conventions Best Common Practice, Issue 1.0”, dated January 2016.

8.15.4 Extension Convention

The convention used for assigning extensions will be developed based on the well-defined Logical ID system used by the CCTV system. This is described in the telephone BCP for naming and numbering standards. The extensions will be based upon the station ID and the number of the phone that is used in its name. This will allow for a self-documenting type system that allows for easy identification of the location of any particular phone extension in the system. The IP address of the phone will also be derived and flow from the extension and name of the phone so that they are all logically linked.

8.15.5 Monitoring of Devices

When the system has transitioned to VoIP, central management of all IP phone sets will be done using the same techniques as for any other IP device. SNMP statistics can be gathered as well to further monitor the state of the phone and any dropped packets. Central alerting in the system should also be able to constantly monitor the key parameters affecting voice quality and alert if these go outside of established thresholds. In addition, control requires information and logging of all phone calls to determine call volumes. The system must be able to present reports that show the number of calls received in the control room over the past year.

8.15.6 Automated Device Testing

All emergency phones, as they migrate to IP, must have the ability to self-test. This means that they must be able to tell if the microphone and speaker portions are functioning in addition to whether or not the phone is on the network. This is critical to ensure that the phone is working at any given time and when it stops, alerts can happen to allow personnel to get to site as soon as possible to resolve the issue.

8.15.7 Integration to PA/VMS

Integration and interconnections of the PA/VMS to the telephone system is described in Section 8.14.

8.15.8 Redundancy

All backend servers that drive the phone system and emergency phones must be redundant and provide a high level of availability. This must also extend to the PRI or VoIP trunk lines that connect the system to the PSTN. The phone system is one of the most critical systems to keep operating and must be a highly reliable and available solution.

8.15.9 Phones

8.15.9.1 Right of Way (ROW) Phones

ROW Phones (painted white) must be installed at nominal 350 m spacing along the LRT corridor in the vicinity of LRT communication duct bank vaults. In the duct bank vault a 4 pair armored telephone cable will be spliced into the main telephone trunk cable and pulled into each ROW telephone set and terminated. Refer to Figure 8.2 for phone support stand detail drawing. As the system migrates to VoIP phones, these installs can be paired with ROW switches used for cameras at all crossings and intersections and use the same network infrastructure to drive two different communications systems. Another possibility for these phones is the use of powered fibre that can potentially bring any VoIP phone within 3 km of a station back to the main communications room and centrally power the device from there.

ROW phones must also be installed at:

i. At each crossing controller.
ii. At tunnel portals, in tunnels and at each cross tunnel. A blue light is to be installed at these phones.

Unless otherwise approved by ETS, the ROW phone must be heavy duty, weather proof, and have an armored handset cord, Guardian Telecom Inc. (ACT-40) or approved equal. Guardian makes a VoIP equivalent to this analog phone described here and this will likely be the new standard once the VoIP system is in place.

If a ROW phone call is made to the ETS Control Centre, the call is recorded. If the ROW phone call is to another ROW phone, the call is not recorded. Dial outside of the ETS phone switch network is not to be permitted from ROW phones.

8.15.9.2 Call on Phones

Call on phones must be installed at the end of all station platforms (stainless steel, two per station). For staff security, a mirror is to be installed on the inside of the door to the compartment. This phone is to be a Guardian SCT-10 or approved equivalent. This phone will also become the VoIP alternative once the VoIP system is in place.

8.15.9.3 Emergency Phones

Emergency Phones should be located as follows:

i. LRT station platforms next to information panels, elevators and seating areas.
ii. LRT station mezzanine levels in fare paid areas close to information panels, and fare equipment.

Refer to Appendix B for typical details.

Emergency Phones must be programmed as an auto ring down telephone line to ETS Security at ETS Control Centre at Churchill Station. The phones are to time-out after 9 minutes if not properly hung up by ETS Security. This phone will change to another vendor once the VoIP project is complete. As this will be tendered, a decision as to the vendor is unknown at this time. ETS will need to be involved with determining the current standard at the time of design.

8.15.9.4 Elevator Help Phones

Elevator Help Phones will be provided by the elevator company. They must be hands free with single button call and compatible with the LRT CS-1000 telephone switch. Elevator phones must be programmed as an auto ring down telephone line to ETS Security. The phones are to time-out after 9 minutes if not properly hung up by ETS Security.

8.15.9.5 Washroom Access Phones

Washroom Access Phones will be installed at LRT Stations where washroom services may be made available for use by the public. Washroom access phones must be programmed as an auto ring down telephone line to ETS Security. The phones are to time-out after 2 minutes if not properly hung up by ETS Security.

As all emergency, elevator help, and washroom access calls are routed through ETS Control Center, they are always recorded.

Signage for all public phones (ROW, emergency, elevator help, and washroom access) must be provided in English and Braille.

8.15.9.6 Staff Service Phones

One (1) single line telephone set must be provided and installed in all service rooms in the LRT Stations where access is required by service and maintenance personnel.

Standard of acceptance for phone sets: TBD, charcoal in colour.

8.15.9.7 Pay Phones

The location of pay phones in new stations must be determined in conjunction with Telus Communications Inc. They* must be consulted early in the design stage of a station to determine their requirements (refer to Chapter 10 Stations and Ancillary Facilities, Section 10.6.4 for placement criteria).

***Note:** Telus contact is Manager of National Public Access (780) 945-8775.

8.15.9.8 Information Phones

Information Phones are incorporated into information panels located at platform and mezzanine/concourse levels. Refer to Chapter 10, Figure 10.9.

Information phone calls are answered by the City of Edmonton 311 operator and are not recorded by ETS.

Signage for Information Phones must be provided in English and Braille.

***Note:** Contact ETS for HDE 11 mounting details for phone type noted by asterisk above.

8.15.10 Phone System Cabling Methods

8.15.10.1 Conduit

Empty telephone conduit provisions must conform with the Canadian Electrical Code and Telus Communication's requirements. The minimum size of conduit must be 21 mm.

8.15.10.2 Pull Boxes

Pull Boxes must be provided in sections of conduit run greater than 30 m, and/or after every two 90º bends or equivalent deflections. Pull boxes must be installed in easily accessible locations.

8.15.10.3 Outlet Boxes

Outlet boxes should be of 1104 type or equivalent except when located on a riser system where it should be 100 mm x 100 mm x 55 mm and equipped with a single gang plaster ring.

8.15.10.4 Wiring

All wiring must be in accordance with the Canadian Electrical Code.

8.15.11 Phone System Powering Methods

All phones are powered in a similar manner to the cameras. Due to the lower power requirements of the phones, it is possible to use alternatives like Phybridge to pass PoE over Cat 3 cable along with the data. This makes retrofits over existing cable relatively simple and reduces the need to replace the original cable in brownfield applications.

8.15.12 Phone programming

Phone programing requirements for analog phones is described in the Analog phone sections. Programing for digital VoIP phones is dependent on the phone vender and specific product. As such, this section will be updated at a future date.

8.15.13 Central management of all help phone devices

As help phones are migrated to VoIP, it is imperative that a central management system be available to keep inventory, configuration management and status of all help phones. The system must also perform the testing on the microphone and speaker to ensure the help phones are all working without requiring manual testing. The results of these tests must be available for a regular report and alarming when phones go offline. Ideally, this system would be able to be expanded to include all phone extensions as they get converted to VoIP.

8.15.14 Enclosures, Panels and Backboards

8.15.14.1 Enclosures

ROW telephone enclosures c/w phone sets are to be weatherproof with a hinged cover. Provision should be made such that the handset cord may easily be coiled within the enclosure.

Supplier: Guardian Telecom (ACT-40)

8.15.14.2 Distribution Panels

Distribution panels, where required, should be flush or surface mounted type, complete with hinged door, catch and lock, and 20 mm plywood backboard (T type or equivalent). Panel sizes are dependent on the number of cable pairs to be terminated and must conform to Telus Communication and telephone industry standards.

8.15.14.3 Backboards

To mount the equipment and terminations, a 20 mm thick one hour fire rated plywood backboard, painted grey, must be provided in main terminal rooms/closets, riser or apparatus closets, and satellite closets.

8.15.14.4 Riser Sleeves

Where riser sleeves are required, they must be:

i. Metallic
ii. Equipped with metal case
iii. 103 mm in diameter

8.15.15 Call recording

All calls to all phone sets in the control room are recorded by a central logging recorder. If a phone call does not go through the control room, it is not recorded. The same system is used to capture radio conversations in and out of control. The current standard for voice logging is NICE. As radio and telephone shift to IP based systems, the voice logger will be migrated to an IP platform and all traffic will be captured by IP networking.

8.15.16 Camera Behavior with Help phones

All help phones must activate an alarm in the CCTV system when a call is placed. This alarm is then programmed to move the closest PTZ cameras to focus on the help phone causing the alarm and pop up the camera in the main control room so security has visual awareness of the situation.

8.15.17 Caller ID conventions

These are under development and will be included in the telephone BCP describing conventions used when naming telephone devices and points.

8.15.18 Distribution Design Requirements

8.15.18.1 Existing Trunk Infrastructure

The existing trunk telephone cable from the ETS Control Centre to University Station is a 300 pair copper distribution cable. Approximately 100 pairs are allocated for use in and around University station with 200 pairs allocated to Health Sciences Station.

Note: The City of Edmonton owns the cables from Churchill Station to Century Park Station. Telus Communications Inc. owns the cable from Churchill Station to Clareview Station.

8.15.18.2 LRT Extensions

i. A 200 pair cable was installed from Health Sciences Station south to Century Park Station during the construction of the South LRT Extension.
ii. Multi-pair (4) telephone cable is required to connect ROW phones located along the LRT corridor.

All future extension must have a minimum of (1) 200 pair cable and (1) multi-pair (4) telephone cable to each ROW phone installed along the alignment for the telephone connectivity requirements of that extension. This will need to be reviewed at the time of design as there may be no need to install any of these cables if VoIP solutions can be found to fully replace the copper cabling.

8.15.18.3 Interfacing Requirements

The specified telephone elements must interface with the communications systems/devices listed below:

i. Emergency phones (including push button) – CCTV
ii. Logging Recorder

8.16 RADIO SYSTEMS

8.16.1 General

This section presents the guidelines that must be followed in the design of the radio system for future extensions to the Edmonton LRT System. It also provides an overview of the radio system currently in use on the LRT System.

The Edmonton LRT System shares a radio system with the Edmonton Police Service and Edmonton Emergency Response Department. The system is a 4 site, GPS Simulcast EDACS trunked radio system employing 20 channels in the Public Safety band of the 800 MHz spectrum. Edmonton LRT utilizes 38 talk groups to meet LRT wireless communications requirements.

All channels are served by 4 full duplex transmitter repeater sites located throughout the City of Edmonton. These four sites are connected in a microwave ring architecture that supports 8 T1 circuits and timing is synchronized through GPS. The EDACS system utilizes 3 T1 circuits

for voice, control, and SCADA monitoring of each remote transmitter facility. Tunnel Radiax cable antenna systems are utilized to extend above ground coverage to all tunnel areas.

Extension of 800 MHz radio signals into Coliseum and Grandin LRT Stations is accomplished by the utilization of a bi-directional amplifier (BDA) system.

The current system supports 20 channels and has capacity, when required, to be expanded to 24 channels. The frequencies are assigned between 821- 824 MHz and 866 - 869 MHz.

Because all channels in an EDACS system are shared by all users and allocated by a central control system, talk groups are created to logically group radio users by function. ETS currently has 38 talk groups of which 7 are dedicated for use by LRT operations, LRT Inspectors, and LRT Maintenance. The other 31 are used by Security, Surface operations, Surface Inspectors, and Surface Maintenance.

ETS is working closely with EPS and FRS to migrate from EDACS to the provincial AFRRCS radio network. The new system changes the frequencies to the 700 MHz range and is based on the P25 standard. It retains a lot of the same characteristics as the existing EDACS in that it will be a trunked system and use talk groups as EDACS does. The biggest difference will be the audio as P25 is all digital audio and EDACS is analog. This overview will be updated once the migration has been completed within the next two years.

8.16.1.1 Definitions

- **Radio Repeater System** is a duplex communications radio network employing sensitive radio receivers and high power transmitters. Low power (3 watts typical) portable radio signals are received by fixed receiver/transmitter base stations and rebroadcast to allow communication between low power (portable) radios over a much wider area than possible by direct portable to-portable radio communication.
- **Receiver Voting** is a network of sensitive radio receivers, equipped with high gain antennas, strategically located to ‘pick-up’ low power (portable) radio signals. The receiver with the best signal is then selected or “voted” to be rebroadcast by a high power repeater transmitter.
- **Bi-Directional Amplifier** (BDA) is an alternate (duplex) frequency amplification system employing narrow band amplifiers and filter networks, rather than radio repeaters, to allow duplex communications to and from below ground (tunnels/stations) areas.
- **On-Frequency Repeaters** (OFR) is a same frequency amplification system employing wide band amplifiers and filter networks to allow same frequency communication to below ground areas.
- **Grade-of-Service** is a term referring to radio frequency (RF) signal level, reliability of radio signal and the impact of this on the quality of audio for voice communication.
- **Global Positioning Satellite** (GPS) is a network of satellites that provide time signals to receivers on earth in order to synchronize clocks or compute a location.
- **Enhanced Digital Access Communication System** (EDCAS) is a radio system that was invented by General Electric and currently supported by M/A-COM / Harris.

8.16.2 Portable radios

The current Portable standard prior to transition to the AFRRCS system is the Harris XG-25P. This radio is 700/800 MHz and capable of both EDACS and AFRRCS. This may change to a different 700 MHz P25 Radio once ETS is fully transitioned to AFRRCS. There are currently 175 portable radios within LRT.

Portable radios must be evaluated for size and weight considerations. Currently Lithium chemistry batteries are used for maximum battery life and weight savings. NiMH, NiCad and Lead Acid are not allowed due inferior performance and charger differences with Lithium batteries.

8.16.3 Mobile Radios

The current Mobile standard prior to transition to the AFRRCS system is a mix of the Harris XG-25M and XG-75M. These radios are 700/800 MHz and capable of both EDACS and AFRRCS. This radio will likely remain the standard after the AFRRCS switchover due the number spare parts required to be maintained, and staff retraining required. Currently the SD160 LRVs use a remote mount XG-75M, U2 LRVs and desktop units use a front mount XG-25M, and automobiles use the XG-25M remote mount. Some vehicles for staff required to carry a Portable radio sometimes are just provided a vehicle charger instead of a vehicle radio. There are currently 200 Mobile radios within LRT.

8.16.4 Installation standards

Other radio systems the LRT Radio System must interface with are:

i. ETS Bus Operations Radio System
ii. Public Safety (Police and EMS) Radio
iii. U of A Campus Security Radio System
iv. The U of A Campus Security radio transmitter is multi-coupled to the common Radiax antenna cable system within University LRT station.
v. The new province wide AFRRCS radio system for emergency response. The connectivity will likely be through a fully redundant network connection.

8.16.5 Tunnel Radio system

The tunnel radio system uses the normal ETS mobile radio for communication. The radios utilize the DAS Radiax cable which runs along the inside of the tunnels. The radio signals are carried back to the nearest communication rooms where they are repeated through the BDA system to ensure reliable radio connectivity throughout all the LRT tunnels.

8.16.6 Industry Specs for all devices

All devices on the AFRRCS network will need to have the following specifications:

i. Must be on the approved device list for AFRRCS. This list is developed and maintained by GoA. ETS currently has 2 Agencies with AFRRCS, 1 for first responders and 1 for non-first responders.
ii. Over The Air Programming (OTAP)
iii. Over the Air Rekeying (OTAR) – First Responder agency radios only
iv. Link Layer Authentication (LLA)
v. Individual Call Capable (I-Call) This is currently a Harris P25 Feature, other manufacturers may have a similar feature but it must be verified to work the same for end users with both the AFRRCS Harris Back end and Harris ETS Consoles in Control.

AFRRCS specification requirements are summarized as follows:

8.16.6.1 Technology

i. Standards Based
ii. APCO P25 / TIA-102
iii. P25 Phase 1
iv. Improved Spectrum utilization
v. 700 MHz frequency
vi. Fully Digital Network
vii. IP Trunked System, Conventional VHF in some areas
viii. ISSI Gateways, Not a system of systems
ix. Simulcast (Edmonton)

8.16.6.2 Features

i. Voice
ii. PSTN
iii. I-Call
iv. Encryption
v. AES 256
vi. OTAR
vii. Limited data
viii. GPS Capable
ix. OTAP

8.16.6.3 Talkgroups

i. Logical grouping of users that need to communicate
ii. Talkgroups do not require dedicated channels
iii. Nearly 65K talkgroups possible on AFRRCS
iv. Agencies define their own talkgroups based on operational need
v. Talkgroups can be encrypted
vi. The system tracks the users in the group and where they are physically located

8.16.6.4 AFRRCS Network Security

i. The physical AFRRCS network links locations.
ii. Voice and data traffic traverse the network over virtual ‘tunnels’ using the Dynamic Multipoint Virtual Private Network (DMVPN) technology.
iii. Tunnels of the DMVPN network utilize a security layer called Internet Protocol Security (IPsec).
iv. IPsec is used for securing IP communications by authenticating and encrypting communications.
v. The tunnel architecture is hub and spoke from the NSC’s to sites and a full mesh between the NSC’s and VSAT hubs.

8.16.6.5 Encryption

i. AFRRCS supports AES 256 encryption
ii. Agencies determine talkgroups encrypted
iii. End User Radios must support encryption Managed thorough Key Management Facility (KMF)
iv. Over the Air Rekeying (subject to operational approvals)
v. No encryption on CETs

8.16.7 Network connection to AFRRCS

In order for the control room radio consoles to communicate to field devices, a network connection is used to connect the consoles at control to the main servers hosted by the Government of Alberta (GoA). These connections are fully redundant in that two routers connect via different network providers to gain access to the government network. The two providers are TELUS and Axia (SuperNet). The routers themselves use Virtual Router Redundancy Protocol (VRRP) to create a virtual gateway that fails over to the active router. All IP addresses on the console network local to ETS are managed and maintained by the GoA. The local ETS routers are owned and maintained by ETS while all backend servers and equipment are maintained by the GoA.

8.16.8 Redundancy

As described in 8.18.6, network redundancy is achieved through having two different connections to AFRRCS via different network providers. Redundancy should also extend to

the end device in the control room. Each console will have two Ethernet connections up linking to different physical switches providing a redundant pathway in the event of an interface failure or switch failure.

The AFRRCS network is also designed to have redundancy via two different network providers for every radio tower site. Within the city of Edmonton, there will be four tower sites providing a simulcast service to the city and creating redundancy for each other in the event of a major failure at a tower site.

In addition, the underground BDA system will be designed with two donor antenna sites at opposite ends of the LRT system and distribute the signals redundantly over fibre optic to each BDA location along the line.

8.16.9 Console Programming

Radio consoles are maintained by outside contractors. All programming changes and modifications are to be completed by the contractor. These configurations are backed up and maintained by ETS' contractor. Any new consoles will need to be purchased from Harris, installed and programmed by ETS' contractor.

8.16.10 Call recording

All radio conversations are logged on a system maintained by corporate IT. The conversations are logged for investigative purposes of incidents involving communication to control. All calls are maintained in the system for a one year retention period and stored on the corporate SAN. The goal is to monitor communications on all ETS talkgroups and icalls from control to the buses.

8.16.11 Monitoring of devices

All network devices that are within ETS' control (consoles and routers) must be monitored to ensure uptime of device and any other issues that can be identified to ensure the applications are running as can be expected. This monitoring will happen with the ETS SNMP monitoring system that monitors all end devices to ensure one simple interface to give status of the entire ETS system.

8.16.12 Talk groups

There are eight (13 in AFRRCS) related LRT talk groups in the overall radio system, and these include the following:

i. LRT–OPS1 through LRT-OPS2 (1-5 in AFRRCS) – is used by LRT Operations. All rail mounted equipment (including LRVs and auxiliary equipment) use these talk groups. In addition to the forgoing equipment, there are many portable and mobile radios using this talk group.
ii. INSP–LRT (LRT-INSP in AFRRCS) – is used by LRT Inspectors for communication with LRT Control.
iii. MNT–BOOK (LRT-BOOK in AFRRCS) – is used by maintenance crews online to inform LRT Control of booking on and off line.
iv. MNT–SIG (LRT-SIG in AFRRCS) – is used by EPCOR Signals for communication.
v. LRT-TPSS in AFRRCS will be used by EPCOR Power for Substation work.
vi. MNT – TRK (LRT_TRK in AFRRCS) – is used by ETS Track Crew for communication.
vii. MNT–LRT1 (LRT-YARD in AFRRCS) – is used by DLM shop technicians.
viii. LRT-FACL in AFRRCS will be used by Facilities maintenance staff.
ix. LRTEMERG – is used by any person working around the LRT system in emergency situations.

This only describes a few talk groups used by LRT. For a complete fleetmap, refer to the ETS fleetmap spreadsheet that is available on request for use in designing radio communications systems for ETS.

All talkgroups are managed by ETS communications and any changes or modifications can be completed working in cooperation with the ETS communications group.

8.16.13 DAS

The DAS will utilize a hybrid Fibre and Coax infrastructure solution engineered in a redundant configuration. The DAS receives RF signal from the base station or off-air BDA and distributes the RF signal to antennas over either coaxial cable (Passive DAS) or fiber (Active DAS).

With passive DAS, coaxial cable and other passive components, splitters and couplers are used. Usually, a central headend BDA drives the passive DAS elements or leaky feeder cable called Radiax.

Active DAS provides improved installation and maintenance benefits over Passive DAS, but still poses some design challenges including limited range and increased system noise. Active DAS is usually the preferred in-building wireless solution over passive DAS for larger facilities such as airports, hospitals, stadiums, high-rises, subway systems and multi-building campuses.

The ETS DAS shall meet the following basic requirements:

i. DAS System shall be compatible with all major access protocols used worldwide including GPRS, EDGE, CDMA2000, 1xRTT and W-CDMA, LTE., LTE-U
ii. DAS will cover a min RF frequency range of 700 MHz to 1900 MHz
iii. DAS System shall include software configurable frequency configuration, system gain and RAU output power.
iv. DAS System shall support industry standard cabling options.
v. DAS System shall support a modular and scalable topology of system equipment.
vi. DAS System shall be deployable in environments with potentially high levels of RF interference while maintaining acceptable levels of operational reliability.
vii. DAS System shall not require separate power connections to the unit's antennas.
viii. DAS System shall be CUL, CSA approved.
ix. The installed DAS shall not interfere with ETS operations and equipment, or with any other existing RF systems within the ETS LRT System, and shall satisfy the following signal coverage requirement:

    a. Signal coverage of 95% or better in public and non-public areas inside the stations and inside the tunnels.

8.16.14 BDAs

Today, the BDA system consists of approximately 14 BDA locations throughout the city of Edmonton's Transit facilities. These systems have been installed in locations that have been identified as having poor coverage for radio units especially portable radios. The primary location for this system is the underground tunnels downtown and any other low lying areas surrounded by concrete. Each of these sites has its own donor antenna on the surface pointed at the downtown tower site and the signals are redistributed internally via radiax cable. None of these sites are managed remotely and the only indication of issues is when trains or personnel report issues.

Going forward, this system will be replaced to accommodate the P25 system and new frequency band that will be used by AFRRCS. As part of the upgrade, new radiax will be installed in the tunnels and designed to effectively cover the space. As well, the system will be fibre fed from two donor locations to ensure reliability and the cleanest signal possible.

Every BDA will also be connected to the ETS network for remote diagnostics and monitoring of every device. This will allow for proactive alerting of potential issues that can be rectified before they become bigger issues.

8.16.15 Radiax and installation

The design of the Edmonton LRT Radio System is unique as it utilizes Radiax 'slotted cable' antenna systems. Radiax cable is installed within station structures, grade separation structures, pedways and throughout the length of the underground tunnels. To minimize conflicts with other tunnel electrical and communications systems, radiax is mounted on insulated standoff hangers. All EDACS radio channels employ segments of the existing Radiax antenna systems for tunnel radio coverage utilizing bi-directional amplifiers and low pass filters. These designs are illustrated by nine drawings in the Kaval Electronics Report.

8.16.16 Coax and installation

All fibre, coax, heliax and radiax which will support the DAS shall be installed in a neat and workmanlike manner. All methods of construction that are not specifically described or indicated in this guideline shall be subject to the control and approval of ETS. Equipment and materials shall be carrier grade. The equipment specified is based on the acceptable manufacturers listed. Where "or equal to" is stated, equipment shall be equivalent in every way to that of the equipment specified, and will be subject to prior approval by ETS and the design engineer.

All materials and work, including but not limited to: cabling, pathways, support structures, wiring, equipment, installation, workmanship, maintenance and testing shall comply with the latest editions of the Canadian Electrical Code, Canadian Electrical Safety Code, and all applicable government, province and local rules and regulations, equipment manufacturer's instructions, and the Canadian Electrical Contractors Association (CECA) Standard of Installation. Installation must satisfy the following:

i. All system components including all cables, connectors, terminators, interconnections, services, and adjustments required for a complete an operable system shall be installed in accordance with NFPA 70 and ANSI-C2.
ii. All components shall be installed according to the manufacturer's instructions, unless ETS authorizes deviations from those instructions.
iii. All outdoor-mounted equipment shall be designed to support ambient temperatures ranging between -40°C and +60°C.
iv. Grounding and bonding shall be installed as necessary to preclude ground loops, noise, and surges from adversely affecting system operation. The system shall include protection against power surges, including lightning strikes, for all network connections and electrical. The system shall incorporate proper bonding and grounding using standard electrical industry practices for the telecommunication systems.

8.16.16.1 Verification Testing

The DAS installation will require verification testing to ensure that requirements have been met; specifically the following tests will apply:

i. Isolation measurement and mapping of micro and macro transmissions
ii. Documented record of input/output levels for all CUDAS components
iii. In building and in tunnel transmitter testing using Praxsym (or equivalent) transmitters and Anritsu spectrum analyzer to confirm coverage compliance, under observation of ETS or its representative
iv. Live subjective Radio and Cellular band testing using actual system users and stakeholders

8.16.17 Coverage expectations

Current radio coverage provides over 99% reliable communication within 95% of the LRT track right of way.

Guidelines for what the power level expectations are for mobiles/portables used on trains. This essentially suggests that the LRT track right of way maintain a sufficient coverage RSSI level to allow for 99% reliability in all train radio communications. This is usually expressed in terms of min dBm level expectations in the corridor which ensures sufficient S/N margins of >15 dB. More specifically, the Minimum signal penetration will be as follows (assume 800 MHz operation):

i. -85 dBm indoors throughout 95 % of the anticipated coverage area.
ii. -95 dBm outdoors throughout 90% of the anticipated coverage area.
iii. -95 dBm within the LRT track ROW throughout 95% of the anticipated coverage area.

8.16.18 Ground Level Stations (including terrestrial coverage)

Radio coverage will adequately serve ground level radio communications for trains and ground level stations as coverage currently extends well beyond the south city limits. Any station with rooms or accessible areas below ground level will require treatment with BDA or OFR technology similar to tunnels and underground stations. Currently Coliseum and Grandin have additional BDAs. Coverage is expected to change with the switchover to AFRRCS.

8.16.18.1 Wire and Cable Requirements

All wire and cable required for radio systems must meet CEC requirements for terrestrial and below grade construction.

All wire and cable must be installed in conduit and appropriate electrical boxes and EEMAC approved equipment cabinets.

8.16.18.2 Cable Hanger Requirements

Insulated ‘stand off’ cable hangers for Radiax antenna cable must be as specified by the manufacturer (i.e. Andrews Antenna Products or approved equal) of Radiax cable and fixtures.

8.16.19 BER measurements

Bit-Error-Rate (BER) measurement testing is to be included in the Customer Acceptance Test Plan (CATP) as part of final testing and commissioning of Radio systems.

The testing should sample points along the corridor and other critical coverage areas. This is important due to changes which may have occurred in the structures from the initial construction drawings. Where and how the BER measurements are conducted must be identified for required consistency. A test plan should exist which identifies the tests to be done, test conditions, instrumentation to be used, the test locations, performance expectations, pass-fail criteria and when tests are to be completed. A standard minimum performance should be established over a reasonable period of time (example; min 1x10-8 BER over a 1 hr test period) to ensure testing credibility, accuracy and reliability.

8.16.20 Radio System Replacement

In accordance with the recommendations of the Radio Network Replacement Project, the radio system was replaced in 2009.

The control features and operating software of any future system must be:

i. Compatible with existing radio systems technology and equipment.

ii. Forward compatible with new wireless network technologies.

8.17 SIGNALS NETWORK

8.17.1 Conventions

The signals network is based off of similar conventions to the main ETS network. Two new types of switch names were introduced to distinguish these switches from the main network. These names are Signals Room Switch (SRS) and Territory Ring Switch (TRS) and are used based on where the switch is located in the architecture.

8.17.2 Architecture

The signals network is made up of a pair of switches in each of the 8 signal rooms in the system. These 16 switches form a large ring that uses a Ruggedcom ring management protocol to achieve 50 ms failover in the event of a switch failure in the ring. Each signal room then has a local ring that connects to single switches at each wayside case in the field. These cases control crossings and other signal devices within a small area of the case and relay that information back to the main signal rooms for master control and monitoring. These wayside case exist in the territory controlled by the signal room that they connect to. Therefore, the switches in these subrings are referred to as territory ring switches.

At Churchill station, there is a single signals firewall that is used for all monitoring of the signals devices from the main ETS network to ensure uptime and availability of all switches. There is one VLAN defined in all the switches for management of every device that is exposed to the ETS communications network and the untagged traffic is for VLC to VLC communications.

8.17.3 Device requirements

Currently, the switches used are made by Ruggedcom. This is going to change going forward as ETS works to migrate this network into the overall ETS infrastructure built on MPLS. Any designs to expand this network will have to be completed in coordination with ETS communications.

8.17.4 Redundancy

All signal switches are connected in a layer 2 ring using a Ruggedcom proprietary ring management protocol that can heal the ring within 50 ms. As this is migrated to MPLS, a similar architecture will be maintained but the device used will be different and there will be more failover paths than a single ring will allow for.

8.17.5 Monitoring of Devices

All signals devices are currently monitored with the central ETS SNMP monitoring platform for a single view into the health of ETS systems and the signals network. Going forward, monitoring of this network will be accomplished with a single view into the entire ETS network which the signals will be a portion of.

8.17.6 Signals Fibre Backbone

In order to reduce the chances of issues with people disconnecting fibre in the field, ETS has dedicated buffer tube number 11 in the 144 backbone for the exclusive use of signals. This buffer tube is spliced directly from the backbone into the signals room and the only location any changes can be made is in the signals room with EPCOR supervision.

8.18 TRACTION POWER NETWORKS

8.18.1 EPCOR RACIs

The status of protective relays, transformers, and circuit breakers in the TPSS is remotely monitored (for information only) by SCADA from the EPCOR Control Centre. This system is under the jurisdiction of EPCOR. It is discussed in Chapter 6 Traction Power, Section 6.2.4.2.

8.18.2 Architecture

The traction power network consists of three separate networks. One is a ring that starts at Churchill and picks up the five southernmost substations on the Capital line. In addition to this, Churchill and the entire Metro line are connected to this network. This network has a gateway and a fibre connection to EPCOR in Churchill station. All the rest of the substations in the system are connected on the second network which is via ISDN lines from the substations to EPCOR. The final network type is a linear line of switches to interconnect the transfer trip signaling from adjacent substations.

8.18.3 Naming conventions

Naming conventions for the various systems and system components are described in the released document “Naming Conventions Best Common Practice, Issue 1.0”, dated January 2016.

8.18.4 Transfer Trip

The transfer trip function allows for a substation that detects a major overload condition to be able to send a signal to its neighbor to trip its breakers as well to avoid creating more overloads down the line. This network is made up of layer 2 switches that connect in a line with no redundancy. This line of switches uses 2 strands out of buffer tube 12.

8.18.5 SCADA control

The status of protective relays, transformers, and circuit breakers in the TPSS is remotely monitored (for information only) by SCADA from the EPCOR Control Centre. This system is under the jurisdiction of EPCOR. It is discussed in Chapter 6 Traction Power, SCADA RTU, Section 6.2.4.2.

8.18.6 Redundancy

The SCADA network has ring redundancy but the transfer trip network does not. This is something that will be incorporated into future designs using MPLS as well for one converged architecture and network.

8.18.7 Device requirements

Today, the standard switches used for this networking are Ruggedcom. This will migrate to new devices as MPLS comes online.

8.18.8 Traction Power Fibre Backbone

In order to reduce the chances of issues with people disconnecting fibre in the field, ETS has dedicated buffer tube number 12 in the 144 backbone for the exclusive use of Traction Power. This buffer tube is spliced directly from the backbone into the traction power room and the only location any changes can be made is in the Traction Power room with EPCOR supervision.

8.18.9 Monitoring of Devices

None of these devices are monitored today due to the history of how the network was built. This will be changing with a new converged network.

8.18.10 Optical Isolation

In order to connect the various RTUs in the Traction Power substation, optical isolation is recommended. This means that Cat 6 copper connections to switches is not allowed and all connections from RTUs to switches must be via fibre optic to prevent and surges from damaging the network devices.

8.19 OTHER SUBSYSTEMS

Several other major communications subsystems are required on Edmonton's LRT System. They are the Centralized Traffic Control (CTC) system for the control of the LRT Trains (refer to Chapter 7 Signals) and the Fare Equipment Monitoring and Control system (refer to Chapter 10 Station and Ancillary Facilities, Section 10.5).

The LRT communications systems use a combination of fibre optic and copper based cable infrastructure for the various subsystems. Sections 8.7, 8.8 and 8.9 provide the design guidelines for cabling and the cable transmission system.

8.19.1 Card Access System

ETS has implemented the Tyco C-Cure Security System and it is provided by Public Works within the City of Edmonton. The following devices must be provided and subsequently monitored:

i. Magnetic door contacts
ii. Door strikes
iii. Bolt monitors
iv. Door holders

Doors/Room Functionality Requirements:

i. Exterior Doors – Monitor and control access during unoccupied periods. Occupancy scheduled alarming is to be provided.
ii. Interior Doors to Non-Public Spaces – Monitor access of all interior doors. Provide 24/7 alarming at doors not regularly accessed or high security areas. Occupancy scheduled alarming at doors frequently accessed must be provided.
iii. Interior Doors to Public Spaces – Monitor door status and provide door hold open controls where required and/or indicated by ETS.
iv. Public Washrooms – Central control of public washroom locks is made from ETS Central Control through the phone system.

Hardwired interconnections from the security system to the CCTV System, for high security area door monitoring, must be provided (refer to Chapter 10 Stations and Ancillary Facilities Section 10.11.6.1). If a high level rated security door (vault, communication room, relay room, traction power substation, electric utility room, etc.) is opened, hardwire interlocks are to signal the CCTV system to view a specific camera. Interconnection requirements must be coordinated with the CCTV system. These interlocks are via dry contacts from the C-Cure System.

8.19.2 Public Wi-Fi

ETS is committed to providing its LRT customers and the general public with a free public Wi-Fi service at all its stations and transit centre locations.

The overall objective of the Wi-Fi network is to provide reliable "best efforts" wireless communications for the general public and ETS personnel in both underground and surface LRT station platforms and transit centres. The following guidelines apply:

i. Wi-Fi wireless communications technologies and station infrastructure must be investigated to support the relevant subsystem connectivity requirements. The objective is to avoid the need to add surface conduits and network wiring after the stations have been completed.
ii. The system architecture will utilize a dual radio Wireless Access Point (WAP) solution capable of supporting 802.11 a/b/g @ 2.4 GHz and 802.11 a/n @ 5 GHz. The technology selected must also be capable of supporting the latest 802.11ac higher bandwidth protocols.
iii. All Wi-Fi network communications subsystems must provide redundancy and survivability in the event of failures and outages.

8.19.3 Third Party Advertising

ETS has existing partnerships with third party advertisers such as Pattison who have been allocated physical space through ETS contracts in all the LRT station platforms and transit centres where there are high concentrations of the general public.

To support this advertising platform, there is a need to consider conduit pathways, cabling infrastructure and network capacity in the initial station communication systems engineering and design phase.

The system architecture will need to consider:

i. The network capacity requirements
ii. Data transport formats and protocols
iii. Data redundancy and reliability
iv. Network tie in points and back-office requirements.

8.19.4 Third Party Connectivity

ETS will continue to explore opportunities for enhancement and third-party upgrades within the LRT public realm. Such enhancements and upgrades will be subject to the same performance requirements as existing systems. Communication system considerations will include secondary power, network access and connectivity and possibly TELUS telephone lines depending on the application. Also, security system integration may be required. Some of these opportunities could include the following:

8.19.4.1 ATM's

Public ATM's will require pathway conduits for both power and network connectivity back to the station Comm rooms. Strategic and secure deployment locations within the station footprint will require consultation with the third party.

8.19.4.2 Vending machines

Public vending machines may require pathway conduits for both power and network connectivity back to the station Comm rooms depending on the sophistication of the vending machines. Strategic and secure deployment locations within the station footprint will require consultation with the third party.

8.19.4.3 Coffee shops and portable food kiosks

Coffee shops and portable food kiosks will likely require secondary power, potable water, and sanitary sewer service in station plaza spaces. They will also require pathway conduits for both power and network connectivity back to the station Comm rooms depending on the

connectivity requirements. Deployment locations within the station footprint will require consultation with the third party.

8.19.4.4 Other third party

Other third party opportunities will surface as the ETS LRT system scales to include more stations and transport of more people. In order to support increasing third party opportunities, the communication system infrastructure design at future LRT stations and transit centres should consider:

i. Increased conduit infrastructure, conduit size and fill ratios at the LRT stations.
ii. Enhanced Wi-Fi wireless capacity with secure and segregated SSID's for third party access.
iii. Increased capacity in the fibre network backbone.
iv. Potential to scale the security and CCTV network to support the additional third party traffic.

8.20 TESTING AND COMMISSIONING

New technologies are being introduced yearly to respond to growing demand for safer, more efficient, operationally flexible and higher performing Light Rail Transit Systems. The added commercial pressures to shrink timescales for designing and implementing new major rail projects in order to secure early revenue income is resulting in a challenging delivery environment. This added complexity requires new management approaches to lead highly competent engineers through well-defined and controlled systems integration work processes.

An effective Systems Integration strategy ensures that the City of Edmonton LRT communication systems, and infrastructure, combined with Operations and Maintenance inputs, delivers a safe and resilient operational railway system meeting customer requirements.

This section addresses the key testing and commissioning guidelines which should be adopted in order to ensure that City LRT operations meets its overall key performance and business objectives.

8.20.1 Installation, Testing, Manuals, and Training

i. A Customer Acceptance Test Plan (CATP) must be prepared by all system contractors and submitted to the City for approval before any equipment installation or testing is started.
ii. Field installation procedures that are deployed must be consistent with industry practices and the system manufacturer's recommendations. All Communication systems installations will be performed under City of Edmonton supervision at all facility locations.
iii. Actual testing in the factory and in the field shall be certified as being done in accordance with approved plans and procedures. Field acceptance tests must be witnessed. Factory tests may be witnessed at the discretion of the City. Requirements for the publication of operating and maintenance (O&M) manuals as well as requirements for City personnel training shall be developed as necessary.
iv. Co-ordinate with the equipment manufacturer, notify the appropriate City consultant or technical representative in writing, within ten (10) working days before any factory testing to confirm Consultant's desired presence, and be present for all site testing.
v. Co-ordinate with other trades for work which affects the operation of the Communication systems, before submitting request for testing and commissioning.
vi. Perform site testing and commissioning only after all equipment has been installed and is operational.
vii. Furnish manufacturer's certificate or letter confirming that entire installation as it pertains to each system has been installed and tested to manufacturer's recommended installation practices.

a. Submit to the consultant or City technical representative ninety (90) days prior to the schedule "date of Substantial Completion", a comprehensive installation / start-up testing schedule identifying all activities to take place. Include draft forms to demonstrate intended performance for each and every system. Information will include but not be limited to the following:

1. Date of test.
2. Individual involved.
3. System being tested.
4. Description of functionality of the system.
5. Demonstration of proper operation.
6. Revise the draft forms to the City consultant's satisfaction.
7. Provide two (2) copies of certificates of all factory and site testing in complete detail bearing in each case the seal of the Engineer responsible for the tests.
8. Submit all test results for City representative or consultant's review.
9. All equipment or system deficiencies identified by factory or site testing procedures, to be corrected by the Contractor prior to obtaining a "Certificate of Substantial Completion".
10. Complete acceptance and close-out documentation package to be created and submitted for City representative or consultant's review. Final System Operation and Maintenance manual will be required for each system. See Section 8.21 for greater detail.
11. Contractor shall provide an appropriate training program for designated City Operations personnel in order to accomplish and understand all aspects of the specific system operation. Training plan to be submitted for City representative or consultant's review.

8.20.2 Testing and Inspection of Equipment and Systems

i. The Contractor shall be responsible for all tests detailed in the specification and those tests required by a manufacturer as part of their installation requirements.
ii. The Contractor shall only utilize licensed electricians or certified technologists to conduct tests with previous experience in the testing procedures. The Contractor shall inform the City, in writing, who they intend to use with a list of experience and projects completed.
iii. The Contractor shall hire manufacturer certified personnel who will conduct tests on their equipment.
iv. The Contractor shall co-operate with the Independent Testing Contractor to provide assistance during the testing procedures.
v. The Contractor shall schedule all tests and provide a minimum of 48 hours prior notice before testing. Tests may be witnessed by the City or its Technical representative.
vi. System Grounding - Perform ground continuity and resistance tests using method appropriate to site conditions and to approval of City consultant and local authority having jurisdiction. Submit report on test results to consultant and include additional copy in Operation and Maintenance manual.

8.20.3 System Demonstration

i. Prior to final inspection demonstrate operation of each system to Owner, construction manager and consultant or technical representative.
ii. Instruct Owner's personnel in operation, adjustment and maintenance of equipment and systems, using operation and maintenance data provided as the basis for instructions.
iii. Contractor and responsible personnel from the Subcontractors whose work is being demonstrated shall be present at these demonstrations.

8.20.4 Final Inspection for Completion of Contracts

i. Neither the Owner's representatives, the City, Construction Manager nor the Consultant will be responsible for the issue of extensive lists of deficiencies. Contractor assumes primary responsibility for ensuring that all items shown on Drawings and described in Specifications are completely his. Any inspections to approve Certificates of Substantial Performance will be immediately cancelled if it becomes obvious that extensive deficiencies remain outstanding.
ii. Every effort shall be made to ensure that both defects and deficiencies are corrected prior to final inspection.
iii. During the inspection, decisions will be made as to which defects must be rectified before the building or system can be accepted and which defects are to be treated as warranty items.
iv. Deficiencies shall be made good before the Contract can be considered complete.
v. When Contractor is satisfied that the entire work is completed, and after making his own inspection, he shall make written request for a final inspection by construction manager who in turn will notify the owner. This inspection shall be carried out and completed within 10 calendar days of the request, and shall constitute the inspection precedent to the issuance of the final certificate of payment.
vi. If there are any further deficiencies determined by this inspection, they shall be listed by City and provided to Contractor. This list shall be recognized as the final deficiency list for purposes of acceptance of the work under the contract.
vii. Such deficiencies shall be corrected by a date mutually agreed upon between City and the Contractor, unless a specific date is required by the Contract, and a re-inspection by the City shall be called for by the Contractor following his own inspection to take place within 7 calendar days from date of request.

8.21 RECORD DOCUMENTS

8.21.1 Project Record Drawings

i. Submit project record drawings with application for certificate of total performance. Final acceptance of the work will be predicated on receipt and approval of record drawings. Co-ordinate preparation of record drawings as described in City LRT Operations Standards of Performance documents.
ii. Record, as the work progresses, work constructed differently than shown on contract documents. Record all changes in the work caused by site conditions; by Owner, Consultant, Contractor and Subcontractor originated changes; and by site instructions, supplementary instructions, field orders, change orders, addendums, correspondence, and directions of jurisdictional authorities.
iii. Accurately record location of any concealed electrical services, piping, conduits, pull boxes, junction boxes and similar work not clearly in view, the position of which is required for maintenance, alteration work, and future additions. Do not conceal critical work until its location has been recorded.
iv. Dimension location of concealed work in reference to building walls, and elevation in reference to floor elevation. Indicate at which point dimension is taken to concealed work. Dimension all terminations and offsets of runs of concealed work.
v. Make records in a neat and legibly printed manner with a non-smudging medium.
vi. Identify each record drawing as "PROJECT RECORD COPY". Maintain drawings in good condition and do not use them for construction purposes.
vii. After completion of the work, purchase a complete set of mylar prints from the Consultant and transfer the information recorded on the white prints accurately, neatly in ink with dimensions, as applicable. Return these marked-up as-built mylar prints to the City consultant or technical representative for review. Any subsequent changes found by the owner review shall remain the responsibility of the Contractor to rework for re-submission

back to the owner. Throughout the duration of the project the City consultant or technical representative will periodically review the status of project record drawings.

8.21.2 Operation and Maintenance Manuals

i. The contractor will provide three (3) sets of operation and maintenance manuals. Provide separate vinyl covered binders for Fire Alarm and Security Systems.

ii. The contractor will include the following information in the Operations and Maintenance manuals:

a. Catalogue description of each of the following systems:

1. Network and Back Office Devices
2. Fibre Transport
3. Distribution equipment
4. Fire alarm systems
5. Security systems

b. Names and address of local suppliers for the items included.

c. Details of design elements, construction features, component function and maintenance requirements, to permit effective start-up, operation, maintenance, repair, modification, extension and expansion of any portion or feature of the installation.

d. Technical data, product data, supplemented by bulletins, component illustrations, exploded views, technical description of items, and parts lists. Advertising or sales literature is not acceptable.

e. The Consultants reviewed shop drawings.

f. Review information provided in the maintenance instructions and manuals with the Owner's operating personnel to ensure a complete understanding of the Telecom and Electrical equipment and systems and their operation.

g. The contractor shall prepare and submit the detailed operating and maintenance data to the City consultant or technical representative six weeks prior to the beginning of any training.

h. The contractor shall re-submit the data should the City consultant or technical representative find any deficiencies. Training shall not begin until the data has been accepted by the City.

i. The manual sections shall be divided into the following subsections:

1. Shop Drawings (reduced to 11” x 17”).
2. As Built Drawings (reduced to 11” x 17”).
3. As Built Riser Diagrams (reduced to 11” x 17”).
4. Operating Procedures.
5. Maintenance Procedures.
6. Spare parts List.
7. Trouble Shooting Guide.
8. Equipment Lists.
9. Certification Forms.

j. The operating procedures shall be the recommended manufacturers operating procedures for the equipment.

k. The maintenance procedures shall include scope of work, frequency of activity, parts required, and necessary documentation.

l. The spare parts list shall be the manufacturers recommended list for maintenance purposes.

m. The trouble shooting guide shall be the manufacturer’s recommendation for the equipment.

n. The equipment list shall include make, model, serial number, electrical characteristics.
o. The systems operating manual shall be prepared by contractor.
p. The systems operating manual shall be sub-divided into system sections. Each system section shall contain:

    1. The Telecom and electrical design intent.
    2. The system location and areas served by each system.
    3. Equipment included in each system.
    4. Operation of each system in the normal and emergency modes.
    5. Any Operator parameters.
    6. Trouble shooting recommendations.
    7. System schematics or logic diagrams.

8.22 GENERAL EQUIPMENT AND SPARING

General equipment and sparing will be handled through each respective system procurement process. There are many equipment and technology related variables which must be considered as well as the reliability and service availability requirements of each system which the sparing strategy must also support.

Appendix A SYSTEM INTERFACE MATRIX

SYSTEM INTERFACE MATRIX

1/31/2017

Function/Element	Analog	Digital	Primary System Interface	Control & Monitor	Monitor Only	Secondary System Interfaces	Comments
SIGNALS							
VLC		X	Signals			CTC, CBTC	
Relay		X	Signals			VLC	
COMMUNICATIONS							
CCTV							
Cameras		X	CCTV	X			
Recorders		X	CCTV	X			
Video encoder		X	CCTV	X			
Alarm interface unit		X	CCTV		X	Telephone, BMS, Fares	
TELEPHONE							
Emergency phone	X	X	Phone Switch	X		CCTV	
Emergency push button		X	CCTV		X		
Info phone	X		Phone Switch	X			
ROW/Operator phone	X		Phone Switch	X			
Washroom access phone	X		Phone Switch	X			
Elevator phone	X		Phone Switch	X			
PA/VMS							
Server		X			X	CBTC	
RADIO							
N/A							
ELECTRICAL							
STATIONS							
Interior/exterior lighting		X	BMS	X		Motion Detector/Photocell	
Motion detectors		X	BMS		X	CCTV	
Fire alarm zones		X	BMS		X		
Fire alarm trouble		X	BMS		X		
Space temperature sensor (underground stations only)	X		BMS		X		
Door strikes		X	C-Cure	X		CCTV	
Door monitoring		X	C-Cure		X	CCTV	
Sprinkler system		X			X		
Heat tracing		X	BMS	X			
Infra-red com. Ht'g		X	BMS	X			
Bldg space temperature	X	X	BMS	X			
Vaults		X	C-Cure		X	CCTV	
FARE EQUIPMENT							
Ticket vending machines		X	CDCIS	X		BMS, CCTV	
Ticket validators			N/A				
TUNNELS							
Space temperature sensor	X		BMS		X		
Heat tracing		X	BMS	X			
Heaters	X	X	BMS				
Intrusion detection		X	BMS		X	CCTV	
MECHANICAL							
Vent fans		X	BMS	X			
Escalators		X	BMS		X		
Elevators		X	BMS		X		
Pumps		X	BMS	X*	X	* Sump pumps only	
Dampers		X	BMS	X			
AHU	X	X	BMS	X			
Shelter heaters		X	BMS				
TP SUBSTATION (See Section 10 Elect. Stds Manual for complete list)							
15 kV switchgear circuit breakers		X	SCADA	X			
DC circuit breakers		X	SCADA	X			
Transf. over temp		X	SCADA		X		
Rectifier over temp		X	SCADA		X		
SS intrusion alarm		X	C-Cure	X			
		X	BMS		X		
Building temperature	X	X	BMS		X		
Fire alarm		X	BMS		X		
HVAC	X	X	BMS	X	X		
Emergency generator	X	X	BMS		X		
UPS		X	BMS		X		
Vent fans		X	BMS	X	X		

NOTES:

1. The purpose of the Matrix is to identify all of the major LRT functions, by element, that are controlled and monitored centrally and by what system.
2. Functions and elements for some items can be further categorized by facility type.

Appendix B TYPICAL EMERGENCY PHONE DETAILS

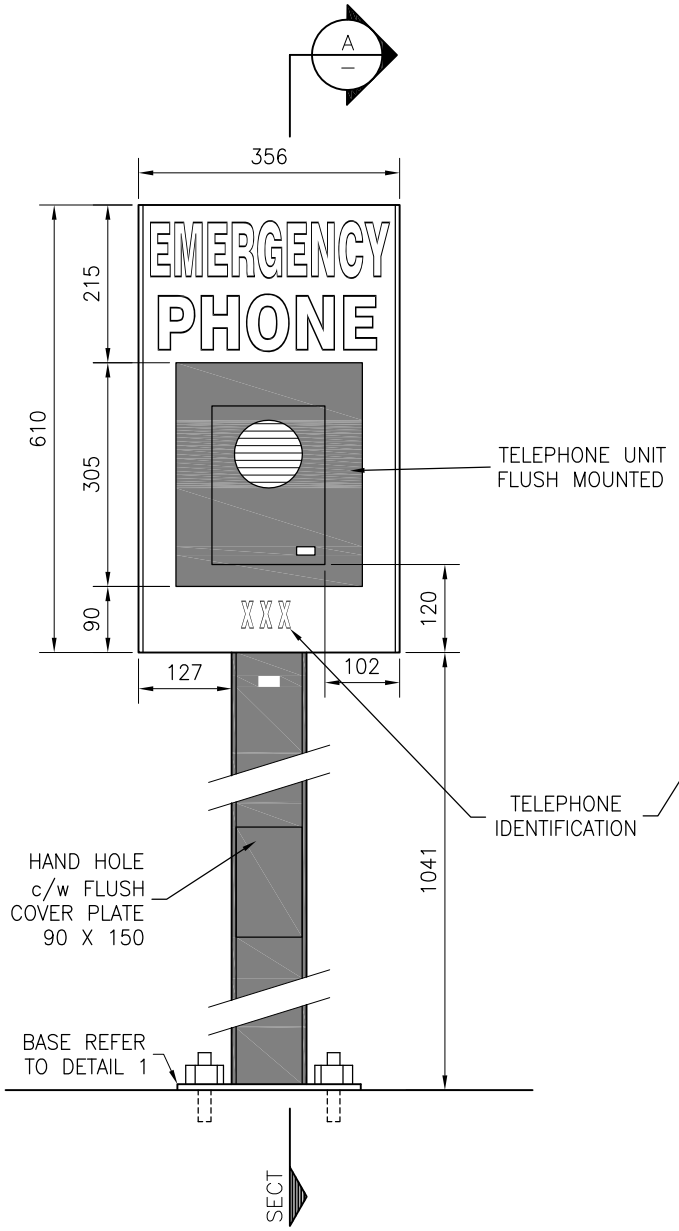

FRONT ELEVATION

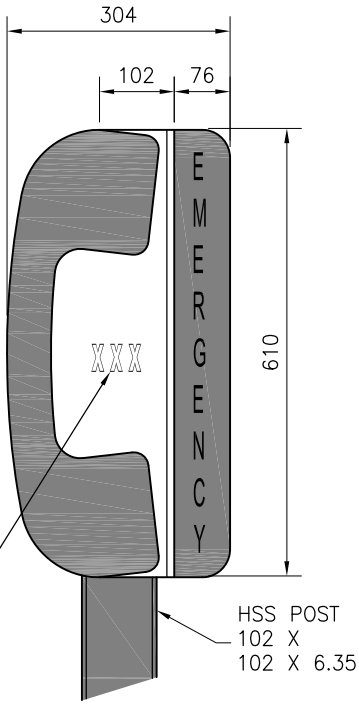

A – SIDE ELEVATION

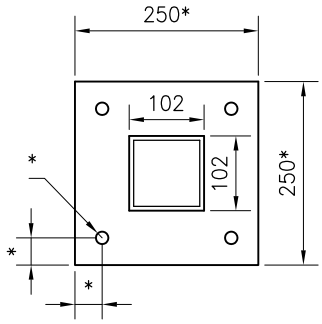

1 – CONNECTION DETAIL

NOTE: * – DIMENSIONS TO BE DETERMINED

		Appendix B TYPICAL EMERGENCY PHONE INSTALLATION	CHAPTER 8 COMMUNICATIONS & CONTROL
30–JAN–17	1.1		
Date	Revision		

Appendix C TYPICAL STATION CCTV SYSTEM BLOCK DIAGRAM

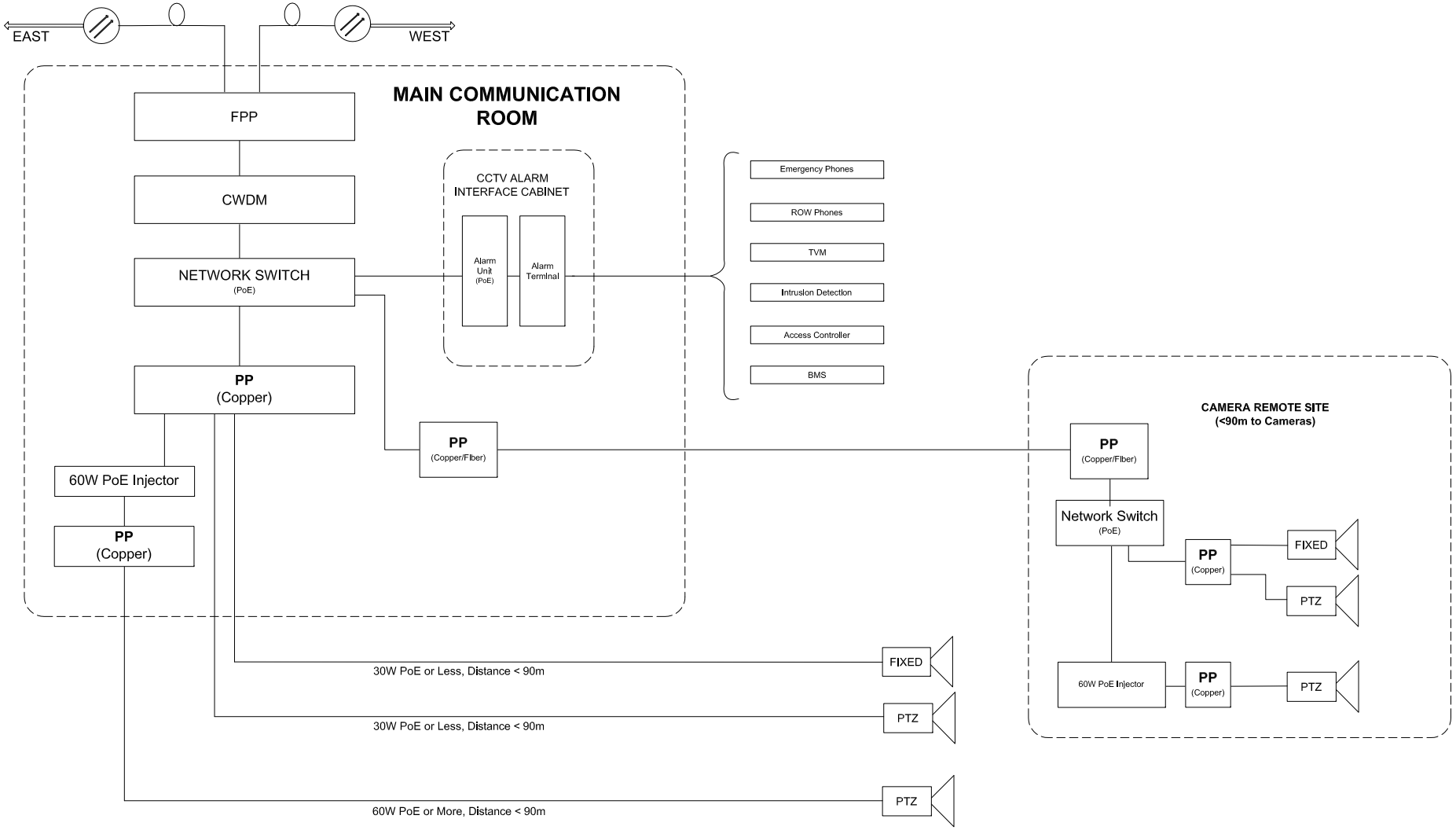

30-JAN-17	1.1
Date	Revision

APPENDIX C
TYPICAL STATION CCTV SYSTEM BLOCK DIAGRAM

CHAPTER 8
COMMUNICATIONS & CONTROL

Appendix D COMMUNICATIONS INFRASTRUCTURE COMPONENTS

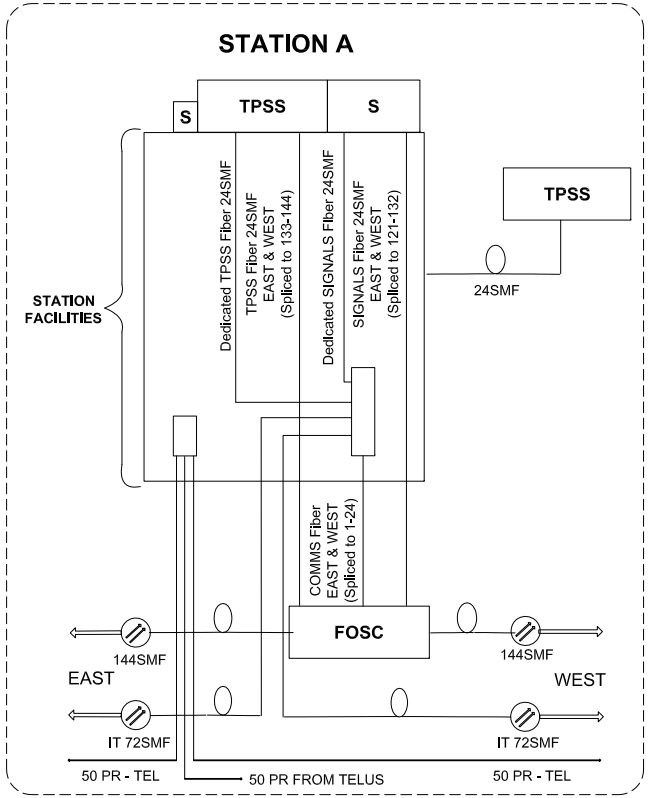

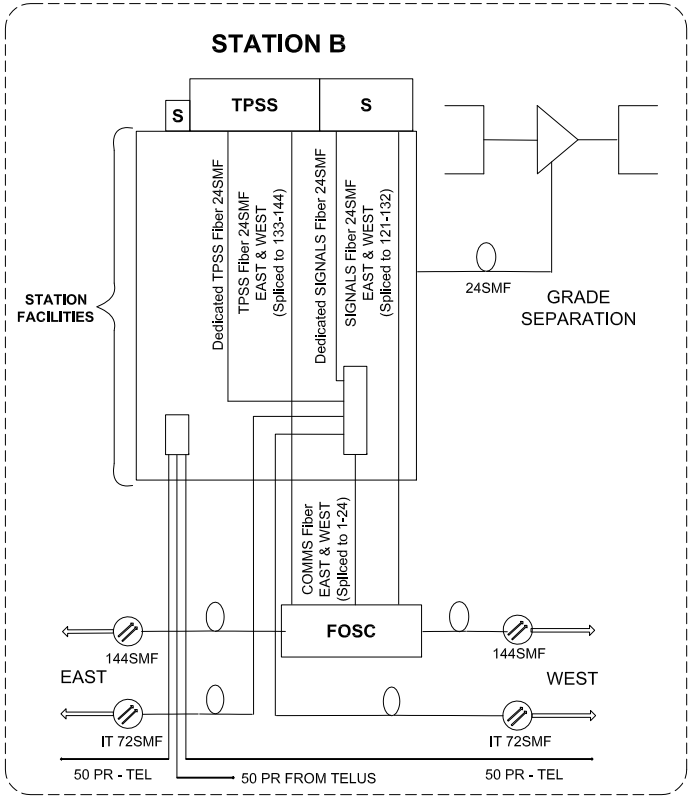

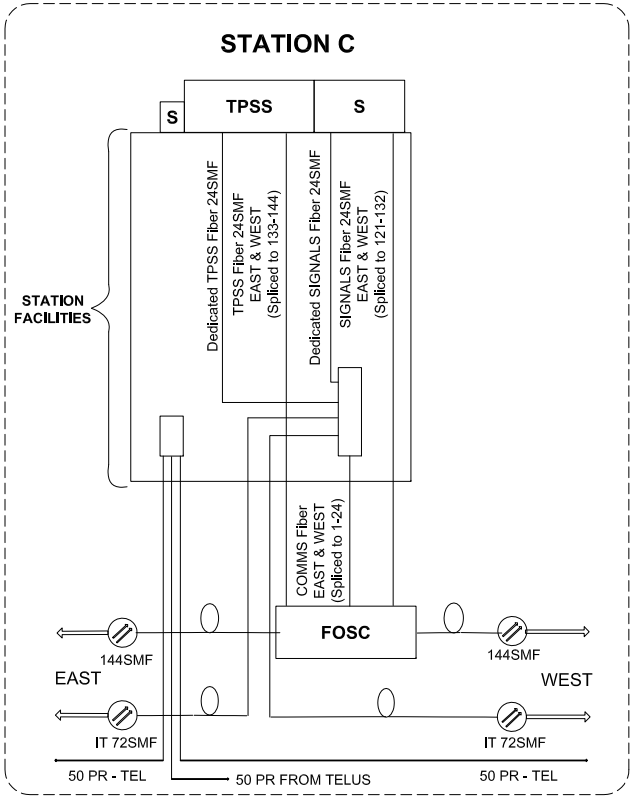

COMM FUNCTIONS

-
TELEPHONE/PBX
- CCTV
- PA/VMS
- BMS
- SCADA
- FARES
- ACCESS CTL
- SIGNALS

COMM FUNCTIONS

-
TELEPHONE/PBX
- CCTV
- PA/VMS
- BMS
- SCADA
- FARES
- ACCESS CTL
- SIGNALS

COMM FUNCTIONS

-
TELEPHONE/PBX
- CCTV
- PA/VMS
- BMS
- SCADA
- FARES
- ACCESS CTL
- SIGNALS

30-JAN-17	1.1
Date	Revision

APPENDIX D
TYPICAL COMMUNICATIONS INFRASTRUCTURE COMPONENTS

Appendix E TYPICAL COMMUNICATIONS ROOM LAYOUT

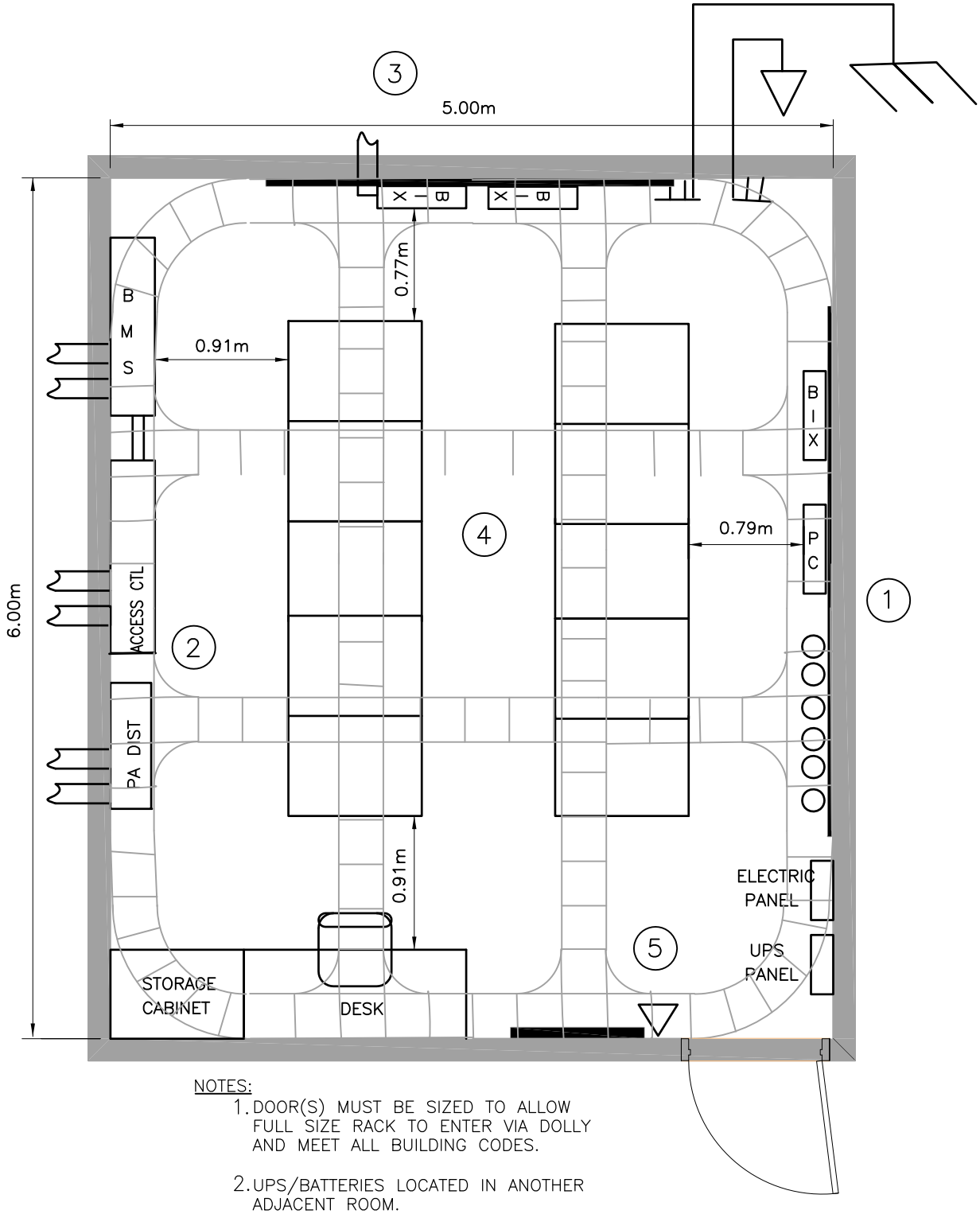

NOTES:

1. DOOR(S) MUST BE SIZED TO ALLOW FULL SIZE RACK TO ENTER VIA DOLLY AND MEET ALL BUILDING CODES.

2. UPS/BATTERIES LOCATED IN ANOTHER ADJACENT ROOM.

		APPENDIX E TYPICAL COMMUNICATIONS ROOM LAYOUT	CHAPTER 8 COMMUNICATIONS & CONTROL
30-JAN-17	1.1		
Date	Revision		

Appendix F COMMUNICATION ROOM RACK & CABLE TRAY LAYOUT

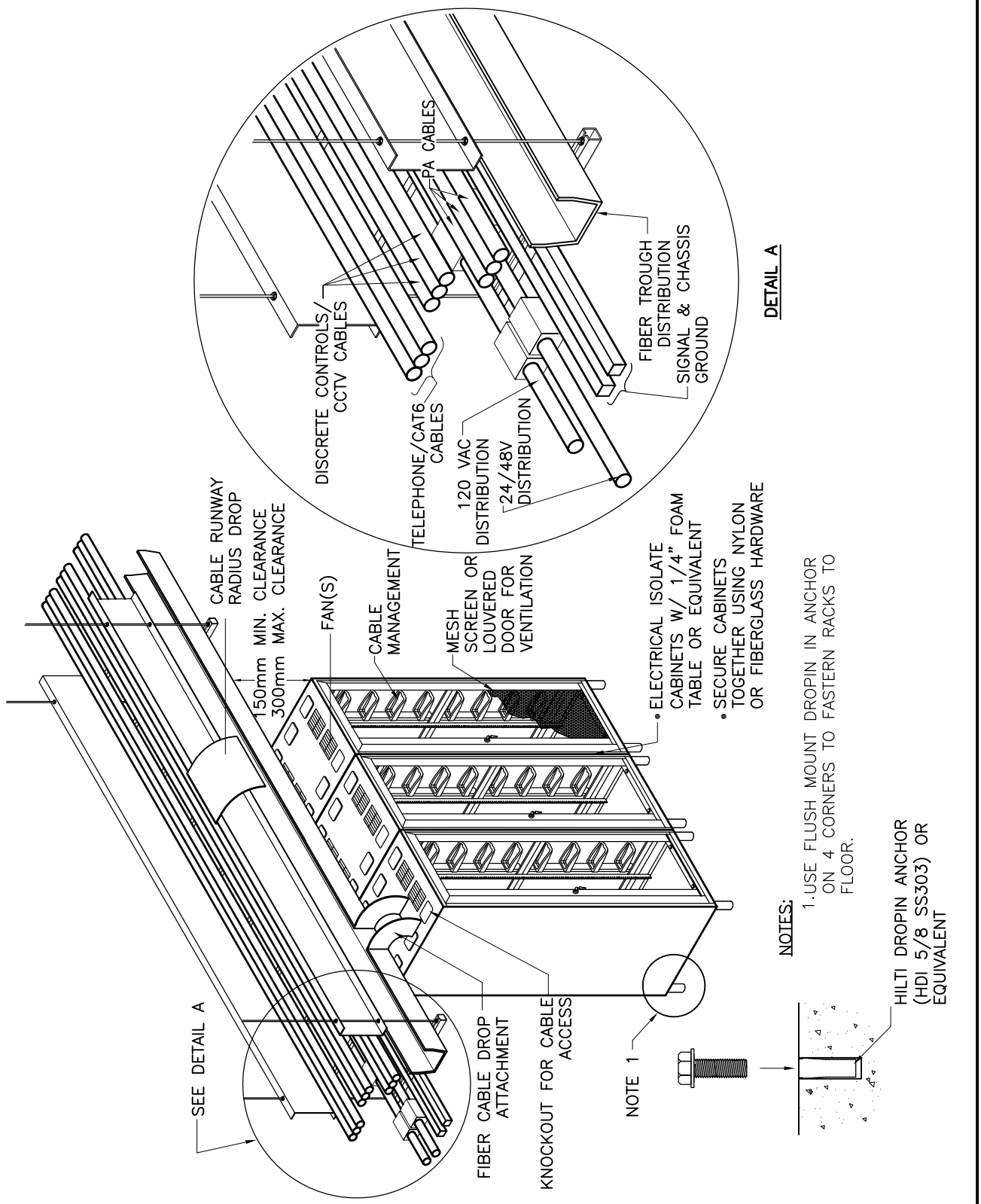

		APPENDIX F TYPICAL COMMUNICATIONS ROOM RACK & CABLE TRAY	CHAPTER 8 COMMUNICATIONS & CONTROL
30-JAN-17	1.1		
Date	Revision		

Appendix G TYPICAL COMMUNICATIONS AND SIGNAL VAULT

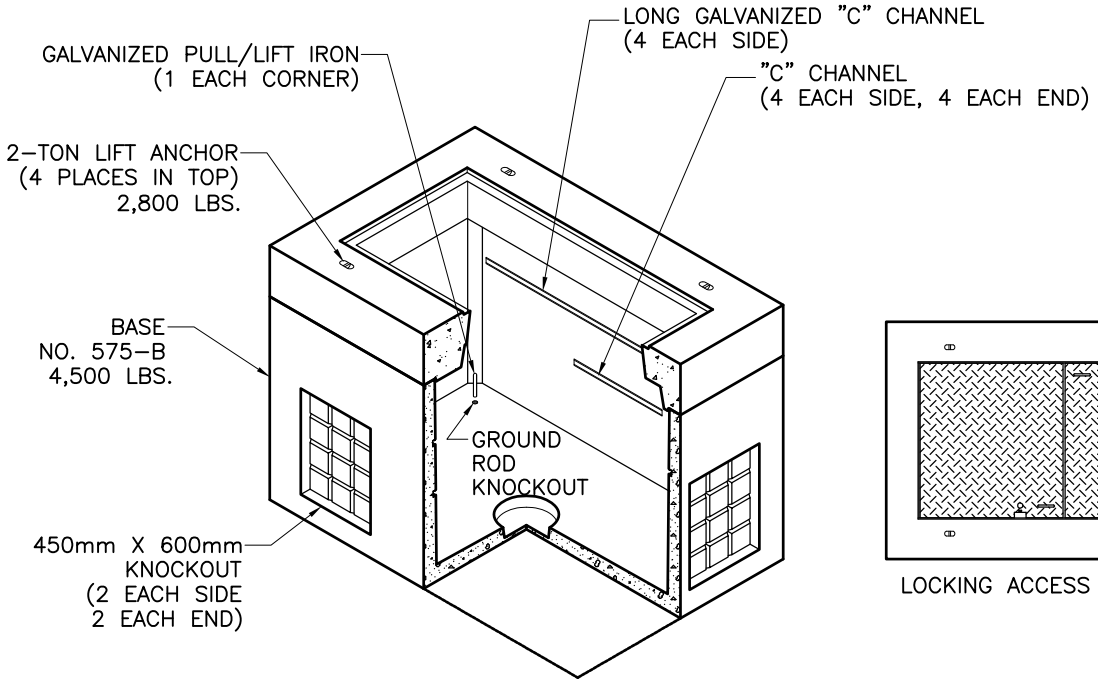

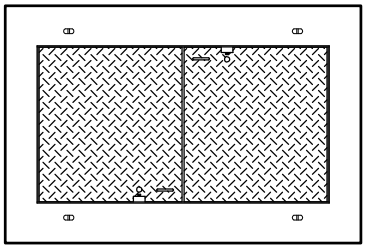

LOCKING ACCESS DOORS (TYPICAL)

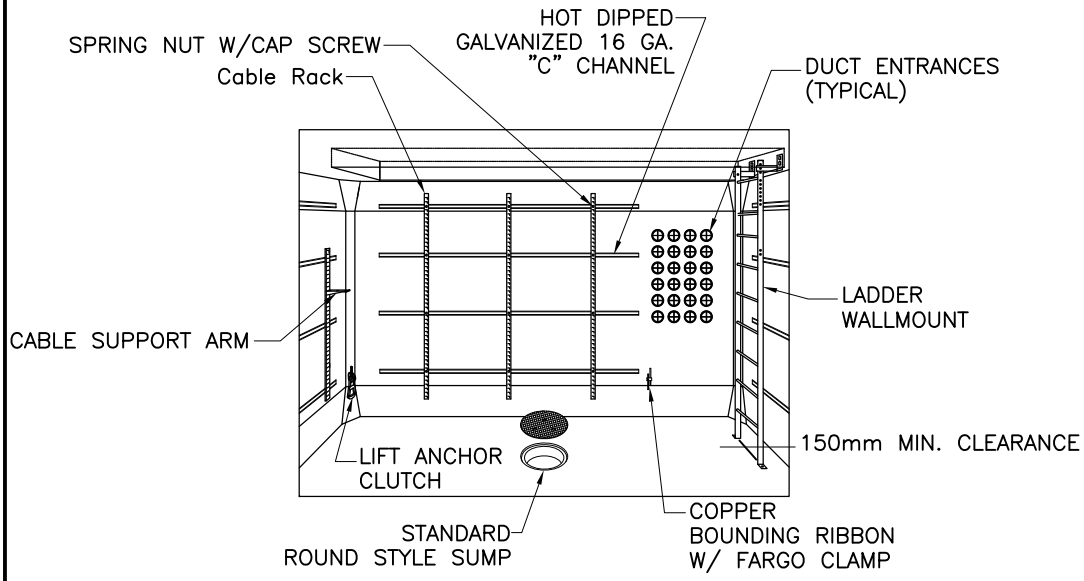

		APPENDIX G	CHAPTER 8
		TYPICAL COMMUNICATIONS AND SIGNAL VAULT	COMMUNICATIONS & CONTROL
30-JAN-17	1.1		
Date	Revision		

Appendix H INDUSTRY STANDARDS AND CODES

APPLICABLE INDUSTRY STANDARDS AND CODES	
CAN/CSA/SAFETY	
2017 National Electrical Safety Code® (NESC®), ANSI-C2	CAN/CSA-C22.2 NO. 0-10 (2015)
Canadian Electrical Code (CEC), 23rd edition (2015)	C22.2 NO. 65-13 (2013)
C22.1-12 (2012)	CAN/CSA-B72-M87 (2013)
CENELEC - EN 50173-1 to -5 (2007)	CENELEC - EN 50173-6 (2013)
NFPA 101: Life Safety Code (2015)	NFPA 70: National Electrical Code (NEC) (2017)
ISO/IEC/ELECTRICAL	
Specifications and Drawings for 24.9/14.4 kV Line Construction (1998)	Specifications and Drawings for 12.5/7.2 kV Line Construction (2005)
Specifications and Drawings for Underground Electric Distribution (2000)	IEC 603-7
ISO/IEC JTC 1/SC 25/WG 3 N655 (Nov. 2001)	ISO/IEC 11801 Edition 2.2 (2010)
ANSI/TIA	
ANSI/TIA-568.1-D (Sept 2015)	TIA-606-B (June 2012)
TIA-568-D.3 (Oct 2016)	TIA-526-14-B (Oct 2010)
TIA/EIA-568-D (2015)	ANSI/TIA-607-C (Nov 2015)
ANSI/TIA-569-A-1 to A-7	ANSI/TIA-758-B (Mar 2012)
TIA-569-D (Apr 2015)	ANSI/TIA-942-A (Aug 2012)
TIA-569-D (Apr 2015)	TIA-1152, Revision A (Nov 2016)
ICEA S-90-661 (June 2012)	ANSI INCITS 455 (Sept 2009)
TIA-492AAAA, Revision B (Nov 2009)	TIA/EIA-604 (Nov 1993)
TIA-492CAAA (May 1998)	ANSI/INCITS 526 (Feb 2016)
ANSI/TIA/EIA-472DAAA	ANSI/ICEA S-80-576
TIA-598-D (July 2014)	ICEA S-83-596 (2016)
TIA-598-D (July 2014)	ANSI/ICEA S-87-640 (Aug 2016)
ISA 99, 5th Edition	
ANSI/ISA-TR99.00.01 (2007)	ANSI/ISA-62443-1-1 (99.01.01) (2007)
ANSI/ISA-62443-2-1 (99.02.01) (2009)	ANSI/ISA-TR62443-2-3 (2015)
ANSI/ISA-62443-3-3 (99.03.03) (2013)	
BICSI	
BICSI Telecommunications Distribution	NECA/BICSI 568-2006

APPLICABLE INDUSTRY STANDARDS AND CODES	
Methods Manual (TDMM), 13th edition (2014)	
ANSI/BICSI 002-2014 (2014)	
APTA, CONTROL, COMMUNICATION and SECURITY	
APTA-SS-CCS-RP-001-10	APTA SS-CCS-RP-004-16
APTA-SS-CCS-RP-002-13	APTA SS-ECS-RP-001-14
APTA-SS-CC-03-15	APTA-IT-CCTV-RP-001-11
OTHERS	
BBS-7239 Boeing Specification Support Standard	Methods Manual-latest edition, 5th edition (2016)

LRT DESIGN GUIDELINES

Chapter 9

2017 EDITION – Revisions Tracking Form

Section	Reference	Revision General Description	Issue Date
		NO UPDATES FROM 2011 EDITION	July 2017

9.0 STRUCTURES

		Page
9.1	GENERAL	1
9.1.1	Introduction	1
9.1.2	Applicable Codes, Standards, Practices and Reference Guidelines	1
9.1.3	Structure Categories	2
9.1.4	Load Factor Method for Design	2
9.1.5	Application of Loadings	2
9.2	BRIDGES	3
9.2.1	Dead Loads	3
9.2.2	Live Loads	4
9.2.3	Vertical Loads	4
9.2.4	Horizontal Loads	4
9.2.5	Derailment Loads	5
9.2.6	Longitudinal Forces Due to Acceleration/Deceleration and Rail Restraint	5
9.2.7	Centrifugal Forces	5
9.2.8	Vehicle Collision Loads	6
9.2.9	Vibration and Deflection Control	6
9.2.10	Fatigue	6
9.2.11	Thermal, Wind, Snow, Shrinkage, Creep Loading Considerations	6
9.2.12	Related Structural Considerations	6
9.2.13	Inspection and Maintenance Manual	7
9.3	BUILDINGS	8
9.3.1	Loads and Forces	8
9.3.2	Related Structural Considerations for Type II and Type III LRT Stations	8
9.4	RETAINING STRUCTURES	8
9.4.1	Loads and Forces and Related Considerations	8
9.5	EARTH EMBANKMENTS	9
9.6	NOISE ATTENUATION WALL	9
9.7	UNDERGROUND STRUCTURES	9
9.7.1	General	9
9.7.2	Type I Stations	10
9.7.3	Tunnels	10
9.7.4	Shafts and Cross-Connections	12
9.7.5	Cut and Cover	13
9.7.6	Portals	14
9.7.7	Temporary Live Loads	15
9.8	POTENTIAL IMPACTS ON STRUCTURES AND FACILITIES	15
9.8.1	Support General Requirements	15
9.8.2	Support Methods	16
9.9	STRUCTURAL REQUIREMENTS FOR CONSTRUCTING LRT TRACKS OVER EXISTING UNDERGROUND STRUCTURES	17
9.10	PRIVATE DEVELOPMENT OVER EXISTING LRT UNDERGROUND STRUCTURES	17

9.11 PRIVATE DEVELOPMENT UNDER EXISTING LRT TRACKS 18

9.0 STRUCTURES

9.1 GENERAL

9.1.1 Introduction

This chapter presents the basic structural design guidelines, codes and standards references that must be followed throughout the structural design process of LRT facilities. The various types of structures that are generally incorporated as part of an LRT project, loading conditions and their expected service life are discussed.

There may be cases where special design requirements are encountered not specifically covered by these guidelines. In these instances the Consultant must seek appropriate guidance on the design parameters from ETS.

9.1.2 Applicable Codes, Standards, Practices and Reference Guidelines

Codes and Standards

The structural design must conform to the most current edition of all applicable design codes and standards documents as follows:

American Association of State Highway and Transportation Officials (AASHTO)
American Concrete Institute (ACI)
Alberta Building Code (ABC)
American Railway Engineering & Maintenance of Way Association (AREMA)
Canadian Standards Association (CSA)
- CSA S6 Package - Canadian Highway Design Code and
  - Canadian Highway Bridge Design Code (CHBDC)
- CSA A23.3 - Design of Concrete Structures

National Building Code of Canada (NBCC)

Design References

A number of the Edmonton design guidelines have been adopted from the design references listed below. The Consultant should refer to these documents for additional information where required.

Design Guideline for the Thermal Interactive Forces between Continuously Welded Rail and the NJ TRANSIT LRT Aerial Structures – Parsons Brinckerhoff Quade & Douglas, July 1995

Thermal Interaction between Continuously Welded Rail and Elevated Transit Guideways – Hid N Grouni and Chris Sadler Structural Office Ontario Ministry of Transportation and Communications

Standard Aerial Structures: Continuous Welded Rail/Aerial Structure Interactive Behavior Report for Dallas Area Rapid Transit – Parsons Brinckerhoff Centec Inc., and Deleuw Cather and Company, June 1988

Continuous Welded Rail Aerial Transit Structure Interactive Analysis – American Transit Consultants September 1990

Practices

The document listed below provides the Designer with the guidelines and process for approval and installation of planned infrastructure in LRT tunnels.

LRT Infrastructure in LRT Tunnels – ETS Standard Operating Procedure (SOP) (most recent version)

9.1.3 Structure Categories

The type of structure which may be constructed throughout the length of the LRT system includes, but may not be limited to:

9.1.3.1 Bridges – Design for 100 year service life

- Bridges carrying LRT tracks only
- Existing highway bridges that may carry LRT tracks at some future date
- Highway bridges carrying roadways over or under LRT
- Pedestrian structures overpassing or underpassing the LRT

9.1.3.2 Buildings – Design for 75 year service life

- Type II and III LRT Stations (refer to Chapter 10 for station categories)
- Traction Power Substations (Stand-alone)
- LRT Maintenance and Storage Shops and Yards
- Parkades – above grade

9.1.3.3 Earth Support and Retaining Structures – Design for 75 year service life

- Earth Embankment
- Retaining Structures – adjacent to track bed
- Retaining Structures – carrying the track bed

9.1.3.4 Underground Structures – Design for 100 year service life

- Type I Stations
- Bored Tunnels (Conventional Tunnel Boring Machine, Hydro-shield)
- Mined Tunnels (NATM or Sequential Excavation Method)
- Shafts
- Cross Connections (between tunnels)
- Cut and Cover Box sections
- Special Trackwork Cavities
- Parkades – below grade or under buildings

9.1.3.5 Portals – Design for 100 year service life

9.1.3.6 Noise Walls – Design for 75 year service life

9.1.3.7 Electrical Ductbanks/vaults - Design for 75 year service life

9.1.3.8 Support systems/slabs for ROW devices - Design for 75 year service life

9.1.4 Load Factor Method for Design

Structures and structural members must be designed to the required strength calculated for the factored loads in such loading combinations as stipulated in the codes and standards under sub-section 9.1.2.

9.1.5 Application of Loadings

For structures carrying LRT loads only, apply one work train (locomotive and four loaded dump cars at 40 km/hr) and one LRT train consist (comprised of five LRV's at 80 km/hr) per track, for strength and serviceability considerations for all structural elements.

For LRV and on-track auxiliary vehicle design loadings refer to Chapter 2 Vehicles, Sections 2.3.2 and 2.3.3 Figures 2.1, 2.2, 2.3, and 2.4 and Chapter 5 Trackwork, Section 5.2.3.2.

For the condition when other vehicular traffic will also be operating on the LRT structure, highway loads must also be applied to determine the most severe loading condition to be used in the design of the structure.

It should be noted that LRT loadings are more characteristic of highway loadings than standard heavy railway loadings. Typically, as part of the design process, the structural designer will also apply the standard highway design loads to determine the most severe loading condition. If the highway loading creates the most severe condition (as compared to LRT loadings) the Consultant must first seek approval from ETS to use the highway loading as the design basis.

9.1.5.1 Loading Combinations (for applicable structure type)

The loading combinations which will affect the structure most severely must be used in accordance with the latest CAN/CSA S-6 and ABC requirements. The Consultant should review relevant design codes such as the current AASHTO and AREMA for further design guidance.

The Transportation Department's Structural Engineer must confirm combinations of vertical and horizontal loads to be considered in the design of underground structures.

9.1.5.2 Distribution of Loads (for applicable structure type)

The Consultant must consider the distribution of loads in accordance with the latest CAN/CSA S-6 and AASHTO. The following load distribution must be checked to determine the worse design loading condition for the design of slab.

<u>Distribution of Wheel Loads to Slab for Tie and Ballast Track</u>

For tie and ballast track wheel loads are transmitted to the deck slab through the ballast. It can be assumed that the wheel loads are uniformly distributed longitudinally over a length of 900 mm, plus the depth of the track structure, plus twice the effective depth of slab, except as limited by wheel spacing. Wheel loads can be assumed to have uniform lateral distribution over a width equal to the length of the tie plus the depth of ballast under the tie, except as limited by the proximity of adjacent tracks or the extent of the structure.

<u>Distribution of Wheel Loads to Slab for Direct Fixation Track</u>

For direct fixation track, wheel loads are transmitted to the deck slab through the rail fastening system placed directly on the slab. It can be assumed that the wheel loads are uniformly distributed over a length of 900 mm along the rail. This load can be assumed to be distributed transversely (normal to the rail and centered on the rail) by the width of the rail fastener plus twice the depth of the deck and track support structure except as limited by the proximity of adjacent tracks or the extent of the structure.

9.1.5.3 Seismic Requirements

There are no special requirements for the Edmonton LRT system. The provisions of the ABC are adequate.

9.2 BRIDGES

9.2.1 Dead Loads

Dead loads for the LRT structures should be established in accordance with the latest editions of the ABC and CAN/CSA S-6. The following items are normally included but may not be limited to:

- Structure self-weight
- Ballast (if provided)
- Track slab

- Plinths, rail fastening components and rails
- Permanently installed pipes, conduits, cables and wires
- Utility services
- Traction power systems cabling, wiring and related hardware including traction power masts
- LRT Signal systems cabling, wiring and related hardware including signal lights and support masts
- Partitions
- Service walkways
- Bridge railing
- Lighting fixtures or masts (if required)

9.2.2 Live Loads

In reference to Section 9.1.5, the live load design weight to be used for the LRV is shown in Figure 2.3. The vertical static wheel load configuration for the design vehicle is also shown on that figure. This loading is not only applied as a single vehicle but also applied as a total of up to five vehicles to determine the most severe stress conditions in the structural member under consideration. This design LRV is heavier than the Siemens/Duewag (SD) RTE series and the SD 160 LRV's The application of the design loading will allow the use of LRV's other than the SD RTE and SD 160 in the future.

The configuration of the vertical static wheel loads for the Work Train is shown in Figure 2.4. This loading must be applied as a single vehicle (locomotive and four dump cars) on any one track.

In long structures, designing for the Work Train as opposed to the design LRV, may result in significant extra costs. In such instances, a cost-benefit analysis should be carried out and alternative span configurations be analyzed and optimized with the objective of obtaining the most cost-effective solution.

Bridges must also be designed to accommodate highway vehicle loads (equivalent to the MS200 loading) specified in latest CAN/CSA S-6.

As per Section 9.1.5, highway design loads (equivalent to the MS200 loading) should also be applied to determine the most severe condition.

9.2.3 Vertical Loads

For bridge decks supporting multiple tracks, the design LRV load is applied as follows:

2 tracks	- 100% on each track
3 or more tracks	- 100% on any 2 tracks and 75% on any additional tracks

For a multiple track structure, a combined impact factor and allowance for rolling of 10% for welded rail, and 30% for turnouts and sliding rail expansion joints is to be applied to the total live load. This impact factor is to be applied on up to a maximum of two loaded tracks.

9.2.4 Horizontal Loads

A longitudinal traction and braking force equal to 25% of the static vertical live load must be applied on all loaded tracks at the level of the uppermost rail. The force generated is offset by the resistive clamping force of the rail clip and the number of plinths on the bridge. Typically, the clamping force per clip is 13.35 KN. The clip clamping force must be checked and confirmed by the Consultant for each individual case prior to being used in the design.

Horizontal design forces resulting from thermal effects of the bridge structure acting on the rail must also be considered along with centrifugal forces and forces due to lurching, hunting, collision, broken rail, structural interaction (tangential and radial), snow, wind and earthquake.

9.2.5 Derailment Loads

Potential derailment load effects must be considered. In the absence of actual crash test data or the results of a detailed dynamic crash/impact analysis the load effect of a derailment event can be accounted for by applying concurrently vertical and horizontal (transverse) forces to the supporting structure as follows:

- Vertical load effect – either a) equal to the weight of three (3) LRV's positioned parallel to the axis of the track with an impact multiplier equal to 100% of the LRV design weight, OR b) equal to the weight of the Work Train positioned parallel to the axis of the track with an impact multiplier equal to 50% of the Work Train design weight. The derailed LRV or Work Train must be assumed to be positioned a perpendicular distance away from the track alignment so as to cause the maximum load effect due to the load.
- Horizontal (transverse) load effect – equal to 10% of the LRV or Work Train weight, distributed proportionately along the length of the train in accordance with the axle load distribution along the length of the train, acting perpendicular (transverse) to the track alignment at an elevation 1.05 m above the top surface of the rail.

When checking any component of the bridge superstructure or substructure that supports two tracks, only one derailment event need be considered at a time. Concurrently with the derailment event the other track must be assumed to be loaded with a stationary train (either the Work Train locomotive and four dump cars or five LRV's). Other methods of establishing a derailment design load presented by the Design Consultant may be considered by the City.

Research indicates that where the trackway cross section has a clearance between the LRT train and a barrier wall of between 150 mm and 900 mm, and with maximum vehicle operating speeds of *96 km/hr, the force due to horizontal derailment loads is 40% of the weight of a single LRV acting 600 mm above top of rail and normal to the barrier wall for a distance of 3 m along the wall. For tracks protected by guardrails, the guardrail must be designed to resist this force. For the Edmonton LRT System the force calculation should be based on a design operating speed of 80 km/hr.

For derailment events that would cause LRV wheels to bear directly on the structure slab, the wheel load distribution on the slab should be established using a rational method

9.2.6 Longitudinal Forces Due to Acceleration/Deceleration and Rail Restraint

To determine this loading condition a force equal to *15% of the LRV design vehicle load, without impact, per track, should be applied at the center of gravity of the LRV above the top of the rail. Consideration should be given to combinations of acceleration and deceleration forces where there is more than one track on the structure.

For tie and ballast track with continuously welded or bolted rails spanning the entire structure it can be assumed that up to ± 50% of longitudinal forces due to acceleration/deceleration and rail restraint is transferred outside the structure. Whenever CWR is terminated, any movement of the rail end must be restricted. The restraint will introduce a significant longitudinal force. To avoid excessive longitudinal forces, CWR must <u>not</u> be terminated on aerial structures unless the structure is designed to withstand the additional imposed load.

9.2.7 Centrifugal Forces

For structures carrying curved track, the *centrifugal force resulting from the curvature is to be applied at a height of 1.8 m above the top of rail measured along a line perpendicular to the line joining the top of rails and equidistant from them. The centrifugal forces are to be determined in accordance with the codes and standards as stipulated in Section 9.1.2.

***Note:** Adopted from AREMA

9.2.8 Vehicle Collision Loads

Piers or other structure support elements that are situated less than *10 m from the edge of an adjacent street or highway must be designed to withstand a horizontal static force of *1400 KN applied horizontally at *1.2 m above ground level at the support component. This force is to be applied on the support element at an angle of *10° from the direction of the road traffic.

***Note:** Refer to Canadian Highway Bridge Design Code S6-06 3.15.

9.2.9 Vibration and Deflection Control

Vibration behavior of structures must be considered and design features adopted so as to avoid or mitigate the occurrence of undesirable levels of vibrations. In the case of a bridge or elevated structure, in the absence of detailed dynamic analysis, to limit dynamic interaction between the superstructure and the LRV's, the natural frequency of the first mode of vertical vibration of the superstructure should be greater than 3.5 cycles per second for longitudinal members. Consideration must also be given to the lateral and torsional vibration modes of structures and structural proportions must be selected so as to avoid or mitigate associated vibration or resonance response tendencies. When functional or other considerations result in superstructure natural frequencies that fall within vibration sensitive ranges, provisions shall be made in the design to mitigate resonant vibration response through the use of tuned mass dampers or alternative methods.

Provision is to be made so that vibrations transmitted to the rail from the LRV's, or generated within the rail will be dampened before reaching the track slab or the track bed. This can be accomplished by the fastener system.

The deflection due to live load plus impact should not exceed 1/800 of the span for beams or 1/300 for cantilevers.

9.2.10 Fatigue

Consideration must be given to the effect of change of stress level caused by the passage of LRT trains over structures. Fatigue design criteria must be applied to affected structural elements. 600,000 train load cycles over a structure must be assumed to occur during the 100 year design life of the structure unless otherwise identified during the preliminary engineering stage of a project. LRV loading must be based upon fully loaded vehicles.

9.2.11 Thermal, Wind, Snow, Shrinkage, Creep Loading Considerations

Provision must be made for stresses and deformations resulting from thermal, wind, snow, shrinkage, and creep effects. The Consultant will determine these allowances in accordance with the requirements of CAN/CSA S-6 and AREMA.

Provision must also be made for transverse (radial) and longitudinal rail/structures interaction forces due to temperature variations in the CWR (refer to Chapter 5 Trackwork, Section 5.4.5). The magnitude of the transverse and longitudinal rail forces must be determined by a rigorous analysis of the total structural system including rail fasteners, bearings and substructure. Refer to the CWR *Design References* listed in Section 9.1.2 for further details on interactive force analysis.

9.2.12 Related Structural Considerations

9.2.12.1 Bridges Carrying LRT Tracks

The structural consultant must confirm with the trackwork consultant if the track is to be tie and ballast or if a direct fixation fastening system is to be used. The loads imposed by the track systems on the structure must be carefully considered as the loading condition will affect the CWR fixation to the bridge construction joints.

Where tie and ballast track is used, the ballast shoulder must be retained by a curb or equivalent structure. Drainage for the ballast must also be provided.

An allowance for walkways/refuge area must be incorporated into the design for the safety of operations and maintenance personnel, and evacuated LRT passengers during emergency situations (refer to Chapter 3 Clearances and Right-of-Way). A barrier rail mounted on a parapet must be constructed on the outside edges of the bridge structure.

The design of the superstructure must meet the requirements of CAN/CSA S-6 for static deflection due to live loading for bridges designated “with sidewalks for occasional pedestrian use”. The deflection due to live load plus impact on members must not exceed 1/800 of span for beams and for cantilever span the deflection should not exceed 1/300.

In addition to the forgoing the following must also be evaluated:

- The vibration characteristics of the structure to determine that there is no danger of resonance and to ensure compatibility with the structural design (refer to previous Section 9.2.9).
- The dynamic loading imposed on the track and structure of a fully loaded vehicle coming to a full emergency stop with all brakes on the LRV operative.
- The fatigue conditions of the structure to satisfy the serviceability and durability requirements (refer to previous Section 9.2.10).
- The use of epoxy-coated reinforcement, cathodic protection, or other methods, for reinforced structural elements that are susceptible to deterioration from corrosion.
- The effects of significant air pressure differentials in the design of plenum walls.

All structures must be designed to minimize maintenance requirements. The following factors should be taken into consideration during the design process:

- Method of snow removal
- Track maintenance requirements
- Traction power and signal system requirements
- The control of storm water run-off and its disposal
- Corrosion protection measures

9.2.12.2 Highway Bridges over the LRT

Where highway bridges are to be carried over the LRT alignment, the vertical and horizontal clearance requirements for the structure must be confirmed with ETS and the T & S Structural Engineer. The design of these structures must conform to CAN/CSA S-6.

9.2.12.3 Pedestrian Over/Underpasses

For overpasses, the Consultant must also confirm the vertical and horizontal clearance requirements with ETS and the Transportation Department’s Structural Engineer.

For both pedestrian over and underpasses, the design criteria will normally follow the CAN/CSA S-6 unless specific instructions to the contrary are received from ETS.

9.2.13 Inspection and Maintenance Manual

If so directed by the PMO, the structural design consultant will prepare a draft of an inspection and maintenance manual for the bridge structure that the Consultant has been contracted to design. The draft manual will identify critical areas of the structure to be inspected, frequency of inspection, and include specific guidelines and maintenance/repair procedures. It will be submitted to the City at the completion of final design.

The following structural elements are to be included but are not necessarily limited to:

- Deck
- Girders
- Expansion Joints
- Bearing Units
- Piers and/or columns
- Abutments
- Special protective measures if the piers or foundations are founded in water.
- Connections
- Members susceptible to cracking or deformation

The design must ensure that the critical elements of the structure are accessible for inspection, maintenance and/or repair.

The draft manual will form a key component of the standard O & M Manual prepared by the Contractor for the structure. (Refer to Chapter 1 General Section 1.7.2.1).

There is a need for the City's Inspectors to understand the structural behavior of bridge structure being designed. Additional instruction/training is to be provided by the Designer to the City Inspectors, if deemed necessary.

9.3 BUILDINGS

9.3.1 Loads and Forces

Building structures must be designed to sustain the maximum dead and live loads that they may be subjected to. This includes any erection loads that may occur during construction. The loadings must conform to the requirements of the most current edition of ABC, where applicable.

Refer to Chapter 19 Parkades, Section 19.3.7.2 for the live load conditions to be analyzed for above grade parkade structures.

9.3.2 Related Structural Considerations for Type II and Type III LRT Stations

The platforms of Type II and Type III stations are constructed at grade. They are described in Chapter 10 Stations and Ancillary Facilities. For the station platform height and edge clearance dimensions, the Consultant should refer to Chapter 3 Clearances and Right-of-Way, Section 3.3.4.3 and the applicable figures contained therein.

To avoid the possibility of resonant vibrations induced by pedestrian traffic, the natural frequency of the unloaded structure must not be less than 2.0 cycles per second. To avoid vibrations that might be objectionable to patrons, the calculated live load deflection must be limited to 25 mm maximum.

The structures supporting elevators and escalators must be designed for the maximum dead and live load capacity provided by the conveyance manufacturers.

For better control of shrinkage stresses and to minimize cracking in monolithically poured concrete slabs and walls in the long linear platform structure, contraction joints must be provided at spacing not exceeding 15 m. The reinforcing steel must be designed to handle the calculated stresses.

9.4 RETAINING STRUCTURES

9.4.1 Loads and Forces and Related Considerations

Retaining walls must be designed to withstand earth and hydrostatic pressures, including any live load surcharge and the dead weight of the wall. The geotechnical consultant must provide the structural consultant with the soil parameters for determining the lateral earth pressure.

For retaining structures constructed immediately adjacent to the LRT trackway, the Consultant must determine if the structure is within the soil pressure influence zone due to the LRV loading. If applicable, use 20 kPa as the surcharge loading for the design of the retaining structure

Any adjacent surface elements (such as traction power mast supports) that may exert a surcharge loading on the retaining structure must also be considered.

Retaining walls constructed adjacent to the LRT track bed for the purpose of retaining fill or cut slopes are to be designed in accordance with the soil parameters recommended by the geotechnical consultant (refer to Figures 3.14 and 3.15).

When “Limit States Design Methods” are used for proportioning wall sections, the lateral earth pressure load factor to be used is 1.5.

A drainage layer must be provided behind the wall to mitigate the build-up of hydrostatic pressure. Both the water pressure and the lateral soil pressure must be considered in the design.

The design / installation of proprietary support systems such as Reinforced Earth and Mechanically Stabilized Walls, etc. must be reviewed and approved by ETS.

The retaining wall design should include consideration of appropriate wall face treatments for aesthetics purposes. The top of the wall must be fenced to ensure public safety.

9.5 EARTH EMBANKMENTS

The surface of the embankment must be designed for erosion protection. Surface run-off must be properly intercepted by a drainage system. The Consultant should refer the embankment design criteria of AASHTO for further guidance.

9.6 NOISE ATTENUATION WALL

For at-grade sections of the LRT adjacent to existing or future noise sensitive receivers, such as residential and institutional properties, etc., a noise wall or barrier may be required to attenuate the noise created by the passage of the LRT trains.

Setback and spatial requirements for the wall structural elements must be considered in the design. Refer to Chapter 3 Clearances and Right-of-Way, and the figures contained therein, and Chapter 14 Impact Mitigation, Aesthetics and ROW, Section 14.2.

The noise wall design loadings must conform to the latest requirements of the applicable codes and standards set out in Section 9.1.2

9.7 UNDERGROUND STRUCTURES

9.7.1 General

The Consultant will recommend to ETS the vertical and horizontal load combinations to be considered in the design of underground structures. The design must minimize settlement or soil uplift adjacent to the structures.

The degree of flotation at locations where a high water table is encountered must be checked. The structure is to be designed so that the net downward load at all stages of construction or operation is always exceeding the calculated uplift due to buoyancy by 10%.

The structural design consultant must use the specified LRV loadings, earth pressure, hydrostatic pressure, overburden soil and surcharge and live loadings as required by CAN/CSA S-6 and other applicable codes.

9.7.2 Type I Stations

9.7.2.1 Loads and Forces

The Load Factor Design Method is normally used for the design of all structural components and connections. All underground station structural elements must conform to the ABC and relevant CSA standards for the construction materials being considered.

The major station structural components such as the platform, ramps, mezzanines, and stairways, etc. must be designed for the appropriate pedestrian loading, as required by the ABC. In addition, the loadings of a number of additional components must also be considered. They are listed as follows, but may not be limited to: platform furniture, machinery, electrical equipment, overhead catenary system, pumps, battery/generators, elevators, escalators, artwork such as sculptures, storage of materials needed to service and clean the station etc.

To ensure serviceability and durability, permanent deformations under dead load, live load deflections, and fatigue characteristics under service loadings, must be investigated.

9.7.2.2 Construction Techniques

All underground stations on the Edmonton LRT System were constructed using the tangent pile wall cover and cut technique.

9.7.3 Tunnels

9.7.3.1 Tunneling Methods

LRT tunnel construction in Edmonton has utilized several methodologies as follows:

<u>Tunnel Boring Machines (TBM)</u>

Several types of TBM's have been used to construct most of the tunnels in the downtown area and the section of twin tunnels between the University Station and the Health Sciences Station. They are:

Open Mode TBM	-	generally does not have continuous earth pressure balance support. Suitable for stable ground conditions (till, clay, sandstone)
Slurry-Mode or Hydroshield TBM	-	provides continuous support to the tunnel face. Used in unstable ground conditions (sand).

<u>Sequential Excavation Method (SEM)</u>

This method is based upon excavating the tunnel face either in whole or via pilot drives using backhoes or road-header equipment. The excavated face is given a temporary lining of gunite, reinforced with steel ribs or reinforcing to minimize the relaxation of in-situ stresses in the soil. In unstable soil (sand) conditions, spilling has been installed. The success of the method is dependent on minimizing the time between excavating and lining procedures. When tunneling in areas with a high water table, dewatering of the soil is critical to the success of this tunneling method.

Several sections of twin tunnel in the western sector of the downtown area and from the south bank of the river valley to the University Station have been constructed by the SEM method.

Due to the very sandy conditions in some areas, some form of ground control or stabilization measures has generally been used with all three of the above described methodologies.

9.7.3.2 Loads and Forces

For all tunneling methodologies, the tunnel temporary and permanent linings must be designed to sustain all the loads to which they will be subjected to with minimum Factor of Safety of 2.

The loading conditions are:

- Earth Loads

  The Consultant must estimate the total vertical pressure (earth load) that will be exerted on the tunnel. The earth load is estimated to be the total weight of soil using a soil mass density of not less than 2000 kg/cu.m (to be confirmed by the geotechnical consultant). The full overburden earth pressure is to be multiplied by the appropriate at-rest lateral stress coefficient.

  The horizontal earth pressure exerted on underground tunnel will be based on the recommendations of the geotechnical consultant.

- Surcharge loads due to adjacent buildings
- Live loads of vehicles moving on the surface above the tunnel
- Erection loads including external grouting loads
- Hydrostatic pressure
- Effects of tunnel breakouts at cross-passages, portals, and shafts
- Self-weight of the tunnel structure, including tunnel infrastructure components
- Live loads of vehicles moving in the tunnel
- Loads due to possible imperfect liner erection
- Additional loads due to the construction of adjacent tunnels
- Seismic loads, where applicable

9.7.3.3 Related Tunnel Design Considerations

<u>Tolerances</u>

Alignment and construction tolerance requirements for tunnels (regardless of the construction method) are as follows:

- The distance between centerlines of two parallel tunnels must not be less than 1.5 times the outside diameter of the excavated face unless special requirements are investigated.
- The final location of the inside face of the permanent liner must be within ±50 mm of the design alignment.
- The tunnel must be built so that it is within ±50 mm of the longitudinal reference line and no more than 25 mm inside the indicated finished surface of the tunnel.

<u>Clearances</u>

All tunnels must be designed to accommodate the traction electrification, utilities, electrical and communication ducts and ductbank, fire line pipes, catwalk, etc. in the space between the tunnel wall in accordance with the guidelines and Figures outlined in Chapter 3 Clearances and Right-of-Way. No fixed infrastructure or object can be located within the Design Vehicle Dynamic Envelope (except as noted).

<u>Instrumentation</u>

Extensive instrumentation has been installed on previously constructed tunnels to confirm the structural and geotechnical factors assumed in the design of the temporary and permanent tunnel linings. The Consultant should refer to the historical findings and results for further design guidance.

To confirm the basis for design instrumentation must be provided on all new tunnel construction.

Waterproofing/Corrosion Protection

In general all tunnels, underground shafts and cavities should be sealed to prevent water ingress and full water pressure head from occurring around the opening periphery. The design measures should include a durable structural lining and the provision of a membrane or other effective waterproofing system. Other measures such as the provision of channels to intercept water seepage may also be considered if total water tightness is problematic and cost prohibitive.

The design of the liner should include the provision of measures to prevent corrosion and eliminate stray currents (refer to Chapter 13 Corrosion and Stray Current Control).

9.7.4 Shafts and Cross-Connections

9.7.4.1 Loads and Forces

Shaft and cross-connection linings must be designed to sustain all the overburden soil and live loads and hydrostatic pressure with minimum Factor of Safety of 2.

Shafts inclined more than 45 degrees from the vertical must be designed on the basis of the tunnel design pressure.

9.7.4.2 Related Considerations

Tunnel Emergency Egress

Tunnel exits for emergency situations can include stations, portals, access shafts and cross-tunnels.

Tunnel emergency exits complete with fire door rated assemblies should be spaced so that the distance from any point within a tunnel to an emergency exit is not greater than 380 m, based on the NFPA 130 Standard for Fixed Guideway Transit and Passenger Rail Systems 2000 edition, unless otherwise approved by the AHJ. Emergency access shafts fitted with stairs can be considered as an emergency exit.

Means of egress from an underground tunnel section should be spaced so that the distance from any point within a tunnel to a point of egress is not greater than 245 m, based on the NFPA 130 Standard for Fixed Guideway Transit and Passenger Rail Systems 2000 edition, unless otherwise approved by the AHJ. Cross tunnels can be considered as a means of egress.

Emergency Access Shaft Requirements

- In accordance with applicable codes and regulations, hatches on access shafts must be readily unlatched from the inside of the tunnel by means of panic hardware and opened by means of a key operated device from outside the tunnel.
- Doors must open in the exit direction at the trackway and surface ground levels.
- Doors must meet the fire rating specified in the local codes.
- Locking devices must be provided with panic hardware.
- Access hatches must be protected from surface water. Measures must be employed to divert surface water away from the hatches into the drainage system.
- Continuous handrails must be provided on stairways.

9.7.5 Cut and Cover

9.7.5.1 Loads and Forces

The dead load for structures constructed by the cut and cover method consists of:

- The weight of the basic structure.
- The weight of the earth cover supported by the top of the structure acting as a simple gravity load.
- The weight of secondary elements permanently supported by the structure.

The design unit weight of soil to be used is approximately 2000 kg/cu. m, or as recommended by the geotechnical consultant.

The dead load should be applied in stages to duplicate the life history of the designed structure. For example, removal of the earth cover from a pre-stressed concrete span at some future date may create a serious upward deflection problem and should be analyzed as a separate loading condition.

In general, most cut and cover structures within public right-of-way should be designed for actual cover depth or for an assumed minimum cover depth of 2.5 m when the actual cover depth is less than 2.5 m. If the structure supports a roadway (i.e. the roadway elevation is the control feature) then the design should be based on the actual depth of cover that can be provided.

The horizontal earth pressure applied to the structures is to be calculated using the criteria of CAN/CSA S-6: Design of Highway Bridges. If the Consultant is of the opinion that an alternative approach to estimating the horizontal earth pressure is appropriate for the structure under consideration, approval of the proposed method is to be obtained from ETS.

For any roadway live load that will be applied to the underground structure, the distribution of the live load over area of the structure, in varying depth of soil conditions, must follow the requirements specified by CAN/CSA S-6.

The following loading combinations should be the minimum considered for design (unless modified in consultation with ETS), with the structural members being proportioned for the most severe conditions:

Case 1:	Full vertical and full horizontal loading
Case 2:	Full vertical loading with full horizontal loading on one side and one half horizontal loading on the other side
Case 3:	Full vertical loading with half horizontal loading on both sides

9.7.5.2 Additional Design Considerations

The design of cut and cover structures should be fully compatible with the proposed method of construction. For example, for single or double box sections, the permanent slabs and wall may also form the temporary supports for the excavation.

Before proceeding with final design, the proposed method and sequence of construction should be submitted to ETS for approval. Any constraints that the design may place on the construction sequence should also be identified and resolved prior to the commencement of final design.

Unless constraints dictate otherwise, the thickness of walls and slabs of underground box structures carrying LRT tracks should be a minimum of 600 mm. If this thickness has to be reduced, special measures must be adopted to ensure the water-tightness and long-term durability of the structure.

To promote water-tightness and structural integrity, joints that allow movement (construction, expansion, contraction) should be carefully designed and located. At *locations where there are major changes in the structure section, a construction joint should be provided.

***Note:** Examples are - connecting a cut and cover structure to a station structure, or connecting a cut and cover structure to an open cut structure.

Where a box section meets a station section, the connection should be designed either to absorb any differential movements or to transmit the forces that may occur under any design conditions. Again achieving water-tightness is of utmost importance.

To control shrinkage stresses, and thus minimize cracking, cast-in-place monolithically poured concrete slabs and walls contraction joints should be provided at a maximum spacing of 15 m.

Construction joints must have reinforcing steel continuous across the joint, keys, roughened surfaces, or other positive means of shear transfer in all exterior structural elements in contact with soil or rock. Non-metallic water stops must be provided at the construction joint.

Temperature and shrinkage reinforcement must be installed continuously in all walls and slabs of these underground structures.

Membrane waterproofing or similar approved systems should be provided over entire cut and cover structures. Refer to Section 9.7.3.3 for other seepage control considerations. All boundary condition details, such as flashing and laps must be carefully designed.

9.7.6 Portals

Tunnels and box section entrance portals must be designed in a manner that minimizes the rate-of-change of pressure on an LRT train as it passes through the portal. The pressure rise is a function of both the cross-sectional area of the portal entrance and the entrance speed of the train. The higher the train speed the higher the pressure on the train. The length of the transitional section also has to be factored in.

There are several acceptable approaches available for the design of the transition to the portal as follows:

<u>Flared Transition</u>

The increase in cross-sectional area approximates the cross-section of a 6 degree conical flare starting at the constant area section of the tunnel or box interface (portal end) and extending through to the portal opening.

<u>Tapered Slot</u>

In this configuration, the top and vertical sides of the portal structure are designed without a flare. A tapered slot is provided in the ceiling of the portal.

In general, the following conditions do not require special transition portal sections:

- Tunnels less than 61 m in length
- Portals at underground stations
- Single track SEM tunnels with an LRT train design speed of 72 km/h or lower
- Box sections and single track circular tunnels with an LRT train design speed of 64 km/h or lower

9.7.7 Temporary Live Loads

The City may receive requests from crane operators wanting to position their equipment over built LRT tunnels, underground stations or related underground facilities for the purpose of lifting materials or heavy equipment onto private development located adjacent the underground LRT alignment.

To assist City officials in accommodating these requests structural designers for the LRT underground structures are required to:

- Design underground facilities to accommodate most normal loads of this type.
- Identify if this provision is not feasible and/or is cost prohibitive.
- Identify in their design notes the maximum allowable point loading the LRT facility is designed for.

9.8 POTENTIAL IMPACTS ON STRUCTURES AND FACILITIES

Any possible negative impact to adjacent existing private and/or public structures (including LRT) and facilities due to proposed LRT construction must be investigated early in the design process.

Some of the major influencing factors that may affect the design are:

- Construction clearances to on-track or road vehicles
- Potential ground settlement caused by construction activities
- Temporary or permanent support or protection of the existing structures
- The effect of noise and vibration during construction.

9.8.1 Support General Requirements

The structural consultant, in conjunction with the geotechnical consultant must review all existing structures that are adjacent to or over the proposed LRT construction. Designed solutions must be prepared for their protection and/or permanent support and underpinning, where justified.

The design of underground structures must consider the surcharge load that can be applied due to adjacent foundations of existing buildings or structures. Consideration must be given to the maximum and minimum loads that can be transferred to the proposed structure. The design loads can be assumed to be the same as for those for which the adjacent existing structure was designed. If this information is not readily available, the load provisions in the ABC or the actual weights and the heaviest occupancy for which the building is suitable, can be used.

Additional factors that should be considered in establishing the loading conditions for the proposed structure are:

- Any clauses or conditions from agreements with adjacent property owners, pertaining to loading conditions of structures that pass beneath or adjacent to their properties or facilities.
- The potential for future building construction on the adjacent site.

The cost of underpinning work together with the associated insurance and easement costs can be significant. The Consultant should review with ETS the alternative of purchasing outright the structure to be underpinned with the option of reselling the property after the completion of the LRT project. Chapter 3 Clearances and Right-of-Way sets out the general requirements for setting ROW limits and the acquisition of privately owned property.

Remedial support measures for adjacent buildings may be required when the following conditions are evident:

- The building extends significantly over the proposed LRT structure and must be temporarily supported during construction and then is permanently underpinned.
- The building is immediately adjacent to the LRT structure and requires underpinning. This in turns acts as a retention structure for the sides of the LTR structure excavation.
- The lowering of the ground water may cause settlement of buildings both adjacent to, or some distance away from the cut and cover or tunneled excavation.
- Historical or other sensitive buildings that are in close proximity and it has been deemed necessary that temporary and / or permanent support measures are required.

9.8.2 Support Methods

Methods used to protect existing buildings or structures are influenced by local soil conditions and the construction method to be utilized for the LRT structure. The geotechnical consultant must be consulted and provide advice on the selection of the most appropriate method.

The typical support measures that are generally considered are described in the following sections.

9.8.2.1 Piles

Piles used in the underpinning of building foundations, should, in general, extend below a sloped line drawn from the side of the excavation at a point 1.0 m below sub-grade elevation to the intersection with the vertical projection of the underpinned building foundation, or to sound bearing material, whichever is greater. The slope of this line must be determined in consultation with the geotechnical consultant.

9.8.2.2 Excavation Support

Under some soil conditions, the support system installed for the excavation will be sufficient to protect light-weight structures.

Under heavier loading conditions the following methods may be considered as alternatives to underpinning or to avoid settlement if dewatering is required:

- Reinforced concrete cut-off wall, constructed in short clay-slurry-filled (slurry wall) trenches.
- Bored pile sections (tangent or secant pile walls) braced with preloaded struts

9.8.2.3 Bracing

A tight bracing system is required to minimize any movement of the temporary support. The Consultant must indicate any special requirements and procedures for the installation and removal of the support system.

9.8.2.4 Soil Stabilization

In general, the application of techniques such as freezing and chemical injection for the stabilization of soil under buildings should be subject to a detailed analysis. Proposed solutions using this technique must be reviewed with the geotechnical consultant. If the proposed technique is considered to be a viable cost-effective solution, approval for its implementation must first be obtained from ETS prior to the commencement of final design.

9.9 STRUCTURAL REQUIREMENTS FOR CONSTRUCTING LRT TRACKS OVER EXISTING UNDERGROUND STRUCTURES

The design of structures to accommodate the LRT trackway, over public or privately owned buried structures such as utilidors or pedways must conform to the Canadian Highway Bridge Design Code, CAN/CSA S-6, AREMA, and the ABC.

The basic design loadings must include the following:

- 225 mm ballast plus ties, snow load and LRV and Work Train loadings
- Any other loads as required by the applicable codes and standards

In addition to the load combinations specified by the codes and standards, the Consultant must consider the following load combinations to determine the worst load case scenario.

- For LRV (1) 1.25 x DL + 1.3 (1.6 x LL)
  (2) 1.25 x DL + 1.3 (1.0 x DR)
- For Work Train (1) 1.25 x DL + 1.3 (1.6 x LLw)
  (2) 1.25 x DL + 1.3 (1.0 x DRw)

  where

  DL = Dead Load
  LL = Weight of LRV
  DR = LRV derailment load = 2xLL
  LLw = Weight of Work Train
  DRw = Work Train derailment load = 1.5xLL
  Impactor Factor = 1.6
  Dynamic Factor = 1.3
- The deflection limit of structures must be 1/800.

All loads related to LRT operation must be supported by structures independent of the buried structure. The loads cannot be transmitted to the buried structure.

Where the LRT and a roadway both cross the underground structure, the support structure must be designed to accommodate the highway loading if it has been determined it is the most severe loading condition.

9.10 PRIVATE DEVELOPMENT OVER EXISTING LRT UNDERGROUND STRUCTURES

There may be properties where the LRT has been constructed below ground, but the surface or air rights are available for private development.

There are many variables that are required to be taken into consideration when designing structures constructed over existing LRT facilities.

These include: the type of LRT structure; construction methodology used; depth of the structure; soil characteristics of the location; proximity to major utilities, etc. These are largely site dependent and therefore it is not possible to establish a general guideline that describes the design of building structures that are acceptable for development over underground LRT structures. Each location must be analyzed on an individual basis.

This procedure outlines the City requirements when responding to inquires regarding possible construction over underground LRT structures.

In general, developers interested in such property have the responsibility of making themselves aware of the location, type of LRT structure and construction methodology, geotechnical conditions and related underground utilities that exist for the site being considered for development.

The Developer, and their consultants, are to familiarize themselves with the existing LRT structure and services by conducting a thorough review of existing record drawings (where available), including carrying out a non-destructive inspection as necessary. Responsibility for verifying the existing information remains with the Developer and their consultants.

Specifically, a qualified registered professional engineer, retained by the Developer, must carry out an analysis of the site that identifies the following:

- Increases in the structural loading on the existing LRT structure and measures that are required to support the additional loads.
- Vibration impacts that may be detrimental to the existing facility or its operation and how they can be mitigated.
- Impacts that negatively affect the thermal or moisture resistance of the existing facility and associated remedial measures that are required.
- Impact on both LRT related buried utility services and other utility lines that may be in close proximity to the structure.
- Other factors that could affect the operations of the existing LRT facility in any other manner.

In addition, the Developer is responsible for identifying the measures that are required to ensure that the proposed development will not be affected by LRT operations (i.e. train vibration, etc.) within the existing LRT facility.

All of these activities must be carried out in accordance with the latest applicable codes, standards and regulations including the Alberta Building Code.

The Developer is responsible for providing drawings and related engineering and test results to the City for the City's review. All costs associated with the preparation of the forgoing documents will be the Developer's responsibility.

ETS, on behalf of the City, reserves the right to accept or reject the proposal of the developer. The City may retain services of a qualified third party to undertake an independent assessment to assist in making its decision. The costs of third party services would be borne by the City.

If the development proposal is acceptable, the City will require the Developer to enter into a Development Agreement specifying all terms and conditions pertaining to the proposal.

9.11 PRIVATE DEVELOPMENT UNDER EXISTING LRT TRACKS

Refer to the Design Guidelines given in Section 9.10. For the most part they are applicable to this scenario as well.

LRT DESIGN GUIDELINES

Chapter 10

2017 EDITION – Revisions Tracking Form

Section	Reference	Revision General Description	Issue Date
10.3.4.4	1st paragraph	Added text to give consideration to escalator maintainability	July 2017
10.3.4.5	1st paragraph	Added preference to provide space for 2nd elevator	
10.3.4.6	3rd bullet	Added requirement to provide grade to promote drainage of pedways/covered areas	
10.4.1.10	2nd bullet 3rd bullet	Added requirement for electrical outlets at landings Added requirement for twist lock outlets in public spaces	
10.4.4.1	Doors	Added requirement for lite in door	
10.4.4.2	Doors	Added requirement for lite in door	
10.4.4.5	Train Operator Washrooms Public Washrooms Public Washroom Access Public Washroom Access	Added requirement for drinking water spigot Added requirement to consider maintenance of drainage system Added preference for single occupancy unisex washrooms Added requirement for doorway sensor	
10.6.4	2nd paragraph	Revised reference to Chapter 8	
10.7.1	14th bullet	Added requirement for Park and Ride signage	
10.7.2	Clock tower Comfort and Convenience – 6th bullet	Removed references to prototype clock tower. Corrected spelling of ‘adjacent’; revised reference to Chapter 8	
10.10	1st paragraph	Revised reference to Chapter 8	
10.11.2.1	9th bullet	Added requirements for sealer	
10.11.4.3	Acoustical Treatment – 1st paragraph	Corrected spelling of ‘public’; revised reference to Chapter 8	
10.11.6.1	C-Cure	Revised reference to Chapter 8	

10.0 STATIONS AND ANCILLARY FACILITIES

		Page
10.0	**STATIONS AND ANCILLARY FACILITIES**	**1**
10.1	GENERAL	1
10.1.1	Introduction	1
10.1.2	Applicable Codes, Standards, Policies and Reference Guidelines	1
10.1.3	Definitions	2
10.2	DESIGN PRINCIPLES	4
10.2.1	General	4
10.2.2	Interchange Function	4
10.2.3	Accessibility	5
10.2.4	Fare Payment	5
10.2.5	Passenger Safety and Security	5
10.2.6	Architectural	6
10.2.7	Lighting	6
10.2.8	Artwork	6
10.2.9	Landscaping	6
10.3	STATION SITE, CIRCULATION AND ACCESS	7
10.3.1	Location	7
10.3.2	Access and Egress	7
10.3.3	Emergency Egress/Exiting	8
10.3.4	Vertical Circulation	11
10.4	STRUCTURES AND SHELTERS	15
10.4.1	Platform	15
10.4.2	Roofs	19
10.4.3	Sheltered Enclosures	20
10.4.4	Service Area/Room Requirements	21
10.4.5	Transit Centre Facility	25
10.5	FARE COLLECTION EQUIPMENT	25
10.5.1	General	25
10.5.2	Fare Equipment Types	25
10.5.3	Fare Equipment Placement	27
10.5.4	Central Data Collection and Information System	27
10.5.5	Interfacing Requirements	28
10.5.6	Power Supply	28
10.5.7	Conduit, Cabling Requirements	28
10.5.8	Anchorage Requirements	28
10.5.9	Design References	29
10.6	STATION AMENITIES	29
10.6.1	Artwork	29
10.6.2	Concession Booth or Kiosks	30
10.6.3	Vending and Electronic Equipment	30
10.6.4	Pay Telephones	31
10.6.5	Furniture Items	31
10.6.6	Bicycle Racks	32
10.7	SIGNAGE AND BRANDING	32

10.7.1 Types of Signage – Summary 32
10.7.2 Branding 33

10.8 STATION ELECTRICAL 34

10.9 STATION MECHANICAL 34

10.10 COMMUNICATIONS 34

10.11 MATERIALS AND FINISHES 34

10.11.1 Design Objectives 35
10.11.2 Basic Materials 36
10.11.3 Colour 38
10.11.4 Finishes 38
10.11.5 Specialties 41
10.11.6 Doors and Windows 42
10.11.7 Hardware 45
10.11.8 Gates (Type I and II Stations) 46
10.11.9 Office Furnishings 46

10.12 THERMAL AND MOISTURE PROTECTION 47

10.12.1 Type I Roof Structures 47
10.12.2 Type I and Type II Station Walls 47
10.12.3 Above Grade Structures (Type I Entranceways, Type II and III Roofs) 47
10.12.4 Drainage 48

10.13 ADVERTISING 48

10.13.1 General 48
10.13.2 Location Criteria 49
10.13.3 Advertising Panel Frames 49
10.13.4 Lighting 49
10.13.5 Digital Display 49
10.13.6 Maintenance and Performance Criteria 49
10.13.7 Future Requirements 49

10.14 STREETS DESIGN 49

List of Figures

Figure 10.1 – Stair Detail
Figure 10.2 – Escalator Guard
Figure 10.3 – Platform Tactile Warning Strip
Figure 10.4 – Ticket Vending Machine
Figure 10.5 – Fare Validator Stand
Figure 10.6 – Ticket Vending Machine Anchoring Detail
Figure 10.7 – Bike Stand
Figure 10.8 – Typical Clock Tower
Figure 10.9 – Typical Information Panel Layout
Figure 10.10 – Garbage / Recycling Receptacle

Appendices

Appendix I – Basics for Platform Widths
Appendix I – Electrical/Mechanical Service Room Sizes
Appendix I – Risk Assessment Criteria for Placement of Garbage / Recycling Receptacles

10.0 STATIONS AND ANCILLARY FACILITIES

10.1 GENERAL

10.1.1 Introduction

This chapter presents the specific guidelines, and criteria that are needed by consultants to carry out the preliminary and final design of the many components and elements of LRT stations and other building-type structures on Edmonton's LRT system.

Note: The standardization of elements and station identity are two important elements related to station design. Design consultants are requested to inspect existing LRT stations to acquaint themselves with these elements.

The emphasis placed in previous editions of the LRT guidelines was the presentation of design guidelines and criteria for underground tunnels and complex underground and surface stations.

For the foreseeable future, LRT extensions will be more "urban-style" in nature, as they will be constructed on surface, beside, or within the medians of arterial roadways and adjacent to established residential, commercial and institutional communities. Stations will be required to be more "neighborhood" friendly with special attention placed on their careful integration into adjacent communities. This edition of the Guidelines incorporates the design variances approved and issues dealt with during the design phase of the NLRT extension to NAIT.

The following major topics are included in this chapter:

Applicable Codes, Standards and Related Guidelines
Definitions
Design Principles
Site, Access and Circulation
Structures and Shelters
Fare Collection Equipment
Station Amenities and Furniture Branding
Signage and Branding
Advertising
Materials and Finishes

For the details of the station electrical, mechanical and communication components the Consultant should refer to the appropriate chapters in the Guidelines covering these topics as indicated later in this chapter.

Other documents providing design guidelines and criteria, and standards for specific components such as signage and graphics, transit centres etc. are also available for reference during the engineering and design phase.

All disciplines are required to closely coordinate their design activities with each other to ensure that the many different station elements are properly interfaced.

10.1.2 Applicable Codes, Standards, Policies and Reference Guidelines

Unless stated otherwise, stations and their related ancillary facilities must be designed to meet all requirements of the latest edition of all applicable federal, provincial, and municipal codes and regulations.

<u>Codes</u>

Alberta Building Code (ABC)
Alberta Barrier-Free Design Guide - Alberta Safety Codes Council

CSA Safety Code for Escalators – B44-00
Edmonton Design Committee Bylaw 14054
Elevators and Fixed Conveyance Act
National Building Code (NBC)
National Energy Code (NEC)
Zoning Bylaw 12800 (Landscaping Provisions)

Standards and Policies

Accessibility to City of Edmonton Owned and Occupied Buildings
Canadian Painting Contractors Specification Manual
City of Edmonton Policy C458C - Percent for Art to Provide and Encourage Art in Public Places
City of Edmonton Specifications for LRT Elevators and Escalators
ETS Accessible Transit Instruction
ETS Signage Standards – Light Rail Transit Graphic Standards Manual
ETS Transit Centre Design Guidelines, February 2011
NFPA 14 - Standard for the Installation of Standpipe, Private Hydrants, and Hose Systems
NFPA 130, Fixed Guideway Transit and Passenger Rail Systems
Quality Standards for Architectural Woodwork (AWMAC)

Reference Guidelines

Accessibility and Design Guidelines for the Visually Impaired
Americans with Disabilities Act (ADA)
APTA Guidelines for the Design of Rapid Transit Facilities
APTA Heavy Duty Escalator Design Guideline
Crime Prevention Through Environmental Design (CPTED) Principles
Design Guide for a Safer City – City of Edmonton Sustainable Development

Notes:

i. While LRT stations fall under the definition of buildings in the Alberta Building Code some of their operational characteristics do not coincide with normal building functions. Where no provisions are made in the codes for particular features of design, or where the code provisions are not applicable, the best professional design practice must be followed with the Owner's prior approval.
ii. There may be instances where the Consultant is of the opinion the code requirement should be relaxed or a variance is justified. These situations must be reviewed, first with ETS as the Owner and second with the City of Edmonton Planning and Development Department, the approving Agency.
iii. The Consultant must resolve any conflicts between applicable codes.

10.1.3 Definitions

A **LRT Station** is a facility where LRT Trains stop to pick up or drop off riders. It primarily consists of a platform area for passenger loading/unloading, fare equipment, and information on train arrivals and departures. Other related components may include; service areas, stairs, ramps, escalators, elevators, advertising, and passenger amenities, etc. Stations can be fully enclosed, partially covered with simple roof design or fully open. They can be located underground, elevated, or at grade (surface), and can be within exclusive use, semi-exclusive use or shared use right-of-way.

On Edmonton's System, LRT stations are classified as followed:

Type I Station (Underground) is constructed fully underground with the LRT tracks leading to and from the station located in tunnels. It may or may not be a terminal/transfer station (refer to definition below). The majority of the existing underground stations in Edmonton make provision for walk-on passengers only.

Type II Station (Terminal/Transfer) is normally a surface station providing interchange or transfer capability with bus transit or other modes. This type of station may or may not have a vertical circulation component connecting the platform to the transfer area or facility. Examples of Terminal/Transfer stations are the existing Belvedere and Clareview Stations.

Type III Station (Neighborhood) is a simple surface station, normally located in a suburban area, servicing primarily LRT walk-on passengers from adjacent communities. In most instances, terminal or transfer facilities are not provided however bus stops may be located in close proximity. Only a few of the components as described previously may be incorporated. Elevators or escalators are not provided. An example is Belgravia McKernan Station.

Type IV Station (Elevated) is located above ground level. The LRT tracks leading to and from the stations are located on an elevated guideway or structure. No elevated stations have been constructed on Edmonton's LRT System and none are anticipated. Therefore, detailed guidelines for elevated stations have not been included in this edition of the Guidelines.

Platform is that portion of the station directly adjacent to the tracks where trains stop to load and unload passengers. The platform height *currently conforms to the existing high-level loading LRV's. There are two basic types of platform configuration: center loading with the platform located between each set of tracks, and side loading, with the platforms located on the outside of each set of tracks. Only center loading platforms have been constructed on Edmonton's LRT System.

***Note:** ETS is considering the implementation of low-level loading LRV'S for future LRT extensions into other quadrants of the City. To accommodate this loading configuration Design Guidelines for stations with low platforms will have to be developed and issued to station designers, prior to preliminary engineering.

Ancillary Facilities are those facilities, buildings, or structures adjacent to or directly linked to LRT stations. They can also be stand-alone facilities or structures located within or adjacent to the LRT ROW.

They can include:

- Pedestrian overpass or underpass structures (pedways)
- Passenger shelter structures
- Structures containing mechanical, electrical, communications or other service equipment
- Traction Power or Booster Substation Buildings
- Signal equipment enclosures
- Transit centre buildings (shelters)
- Parking areas (surface and in structure)

Note: Design guidelines for some of the above noted facilities are provided in other chapters.

Inter-modal transfer is the movement, or transfer, of passengers from one mode of transportation such as bus transit to another mode of transportation such as LRT.

Transit Centre is a stopping point for buses and other types of transit service. Passengers using one type of transit service can transfer to another. For example, bus passengers can transfer to the LRT at this location if the Transit Centre is combined with a LRT Station.

Park and Ride is a common name for a dedicated parking area for Bus and LRT passengers' private vehicles. They are generally located adjacent to an LRT Station or Transit Centre. Parking areas can be either at-grade or multi-level parkade structures.

Passenger Drop-off (sometimes referred to as Kiss and Ride) is a designated drop-off area for passengers from private vehicles adjacent to a LRT Station or a Transit Centre.

Barrier-Free is a feature of a building and its related facilities whereby it can be approached, entered and accessed by persons with physical, mental or sensory disabilities.

Proof of Payment is the authorization provided to a person for transportation on a transit vehicle or for access to a proof of payment area. Proof of Payment includes a validated ticket, a valid pass, a valid transfer, or other valid authorization.

Proof of Payment Area is any portion of ETS property restricted to persons with valid proof of payment and is designated as proof of payment area with signs posted at the entrances.

Service Vehicles are used by City of Edmonton staff in the performance of maintenance and operational duties on the LRT and its related facilities.

10.2 DESIGN PRINCIPLES

The following general and detailed design principles apply to the design of new and upgraded stations on Edmonton's LRT System.

10.2.1 General

- Protect and enhance where possible existing community qualities and values. Community access will increase as a result of a station being located within or adjacent to a community.
- The design should be flexible to suit a wide variation in site conditions and to provide for future LRT extensions as well as additions/connections to accommodate future redevelopment of adjacent lands and structures.
- Transit related uses in close proximity to stations should be promoted.
- Analyze the impact of vehicular and pedestrian flows and the effect of adjacent land use patterns both during and after station implementation with the objective of minimizing disruption to existing neighborhoods.
- As the time spent by patrons in aggregate is substantial, the environment for patrons waiting for a LRT train must not only be safe and secure, but should also be enjoyable, comfortable and informative.
- Elements throughout the entire L.R.T. system should be standardized to the maximum extent practical to establish an overall identity.
- The standardization of elements such as platform layout, barriers, proof of payment area layouts, signage, ticket machines, clock towers, elevators, escalators, and finishes further assists the passenger in their use of the system, and develops economies of scale in operations and maintenance.
- Notwithstanding the forgoing standardization principle, individual stations should be recognizable entities to the passenger through the use of different colours, finish materials and some variation in configuration.
- The design life of stations and ancillary facilities is expected to be as follows:

  Type I – 100 Years
  Type II and III and Ancillary Facilities – 75 Years

  Design procedures will be generally on the conservative side and should utilize materials and products especially designed to or suited for heavy, prolonged usage.

- In the application of materials and products, strive for minimal maintenance requirements and ensure that maintenance procedures are as convenient as possible to carry out.

10.2.2 Interchange Function

- Provide a safe, efficient, and convenient station configuration that facilitates the movement of passengers within the station and from one transit mode to another.
- Provide clear and easily understood transit related information that can be referenced quickly in order to minimize disorientation.

- Loading zones at outlying stations must be provided for DATS and private vehicles transporting persons with disabilities. The zones are to be located in close proximity to the transit facility so that safe and convenient access is provided.
- To limit potential liability due to possible increase in the potential for pedestrian accidents, Park and Ride lots should not be separated from Stations by major roadways.
- Access to transit centres should be controlled in such a manner as to prevent private vehicular traffic from entering the bus transit operating areas.
- The pedestrians' walk between access nodes and the station platform should be direct, safe, convenient and as short as possible.

10.2.3 Accessibility

- The application of design guidelines and criteria, standards and practices must accommodate the needs of persons with physical, sensory, and mental disabilities.
- Stations, and their approaches, must facilitate the barrier-free movement of passengers to and from the LRV and other transportation modes in the most convenient and cost effective manner possible.
- A minimum of three (3) designated barrier-free parking spaces for the first 100 parking stalls for self-drive persons with disabilities is to be provided at each Park and Ride lot. To provide safe and convenient access, these stalls should be located in close proximity to the station.
- The Consultant should be proactive in the application of barrier-free standards to address the accessibility concerns of persons with physical, sensory and mental disabilities and should not wait for changes to the Building Codes.
- The Advisory Board on Services for Persons with Disabilities must review station preliminary and final design plans as they are developed

Refer to Chapter 15, Accessibility, for accessibility and barrier-free design guidelines and criteria.

10.2.4 Fare Payment

- Proof of payment is required before accessing Type I and Type II station platforms.
- For Type III stations, proof of payment is required prior to entering the LRT Trains.

10.2.5 Passenger Safety and Security

- Station shelter structures should have sufficient transparency to provide adequate visual surveillance of the station area to enhance patron safety and discourage vandalism.
- The patron should have the ability to:
    - See and be aware of the surrounding environment through unobstructed sightlines, adequate lighting and the avoidance or minimization of confined or hidden areas.
    - Be seen by others, so that the feeling of isolation is reduced.
    - Communicate, find help, or escape when in danger, through improved signage and facility designs.
- Security features such as telephones and CCTV surveillance cameras will be an inherent feature of the station design.
- The design of all station-related public areas (platforms, entrances and passageways, sidewalks, parking areas) will be subject to a Crime Prevention Through Environment Design (CPTED) review by the City.

Refer to Chapter 16, Safety and Security for the design guidelines related to LRT passenger safety and security.

10.2.6 Architectural

- The architectural concept of stations should reflect the attributes of simplicity, economy, functionality, aesthetics, marketability, service-ability and safety and blend in with the local styles of the adjacent community.
- Create a civic architecture that is permanent, functional, has character and is pleasant, yet maintains the *LRT system identity and overall line recognition.

  ***Note:** ETS branding policy requires that standard signage and identification methods must be used. Refer to Section 10.7.

- Develop a family of station parts and amenities that are interchangeable but also allows for the retention of the individual character of each neighborhood.
- Provide an architectural and urban design framework that defines and encourages joint development opportunities.
- Materials used for station components and elements should be durable, easy to maintain and should minimize life cycle maintenance costs.
- Protect passengers from adverse weather conditions.
- Protect passengers from conflicts with vehicular traffic.
- Provide patron seating at shelters and other protected locations on the platform.

10.2.7 Lighting

- The lighting colour spectrum should be as close to natural light as possible to bring out the true colour of objects.
- Lighting should be constant, uniform, and diffused. Glare should be minimized.
- Lighting, particularly interior lighting, should be instant on to enable immediate recovery after a power outage.
- The lighting design must promote safety by identifying and properly illuminating areas and elements of potential hazard.
- Pedestrian access lighting should provide well-defined walkways, crosswalks, ramps, stairs, and bridge corridors.
- Platform edges, shelters, seating areas, fare collection equipment areas, ramps and stairs, LRT and bus loading areas, pedestrian walkways and crossings, parking areas and wayfinding signage must be appropriately illuminated.
- Light trespass into adjacent neighborhoods areas should be minimized.
- Light fixtures and standards should be incorporated into the architectural elements of the stations as much as possible.

Design Guidelines for Lighting and recommended illumination levels are presented in Chapter 11, Electrical Systems Section 11.10.

10.2.8 Artwork

- Artwork is to be incorporated into eligible public areas of LRT facilities in accordance with the City's Percent for Art Policy.

Artwork Guidelines are presented in Section 10.6.1.

10.2.9 Landscaping

- Landscaping is to be in accordance with the LRT Planning Principles, meet the requirements of the City of Edmonton Zoning By-law 12800. Locate trees and shrubs so sightlines are not obscured or hiding places created.
- Relocate trees and shrubs when practicable to do so. If they cannot be relocated, the replacement value of the trees and shrubs must be borne by the LRT project budget.

Landscape Guidelines are presented in Chapter 14, Impact Mitigation, Aesthetics and ROW Control, Section 14.3.

10.3 STATION SITE, CIRCULATION AND ACCESS

10.3.1 Location

The general location of a station is determined during the Conceptual Planning phase of the development of the LRT alignment taking into account a wide range of factors and restrictions that are assessed at the planning level of detail.

The location of the station platform, its length and whether it is staged (5 car verses 4 car) is determined during the preliminary engineering phase of the track alignment design. Refer to Chapter 4, Track Alignment, Sections 4.2.2.3 and 4.3.2.2 for horizontal and vertical alignment guidelines at stations.

10.3.2 Access and Egress

There are three distinct user groups that must be considered in the design of the pedestrian circulation patterns: regular LRT patrons, infrequent users, and persons (users) with disabilities. These groups access the system in the following ways:

- Regular patrons move quickly with a minimum of guidance.
- Infrequent users move easily but with heavy reliance on signage for guidance.
- Persons with disabilities move more slowly with guidance required depending on the frequency of use and degree of disability.

The design of stations must accommodate the varying demands of these user groups.

10.3.2.1 General Requirements

- Entranceways must be laid out to avoid queuing. If doors are required their widths should be equal to the number of pedestrian traffic lanes of the access corridor.
- All ramps, stairs, and passageways (including escalators, and elevators, if required), should be located to provide safe convenient, direct access to and from the station.
- Provide a minimum of two points of access to the platform.
- For Type I and Type II stations, all passenger access to the platform will be provided through designated fare collection or prepaid entry areas. For Type III stations this requirement will be relaxed (refer to Section 10.2.4).
- For Type I and Type II stations all passenger access facilities to the platform may be grade separated from train movements. Access facilities to the platform for Type III stations will be at-grade unless otherwise directed.
- Passenger circulation routes should be direct. Disorientating turns, blind corners, unnecessary barriers, bottlenecks and areas of congestion should be avoided.
- A right-hand flow throughout the station is preferred, as people naturally tend to keep to the right.
- Cross flow of passengers is highly undesirable and should be avoided. Avoid cross-circulation at fare collection and decision points.
- Dead-ends and unnecessary turns should be avoided at all times.
- Surge and queuing spaces must be provided ahead of every barrier and where there is a change in direction, circulation, or modal transfer.
- Provide adequate space so that queues at fare collection areas do not block passenger flows.
- Locate passageways, shelters, stairways, etc., to encourage balanced train loading and unloading. Passengers tend to board at such connection points on the platform.

10.3.2.2 Barrier-Free Requirements

For most barrier-free provisions applicable to stations the Consultant should refer to the Alberta Barrier-Free Design Guidelines, the Alberta Building Code, and Chapter 15

Accessibility. ETS has also developed additional requirements that must be considered. These requirements are:

- The provision of well lit, distinguishable, barrier-free walks and pathways
- At least one barrier-free entrance provided at every station
- Stations should strive for the same general layout features to permit patron familiarity
- To access the station platform, persons with disabilities must be provided with the following facilities:
    - Ramps for Type II and III stations in accordance with guidelines in Section 10.3.4.1
    - Elevators for Type I and Type II stations

In addition to the forgoing, the following features will be provided on the platform:

- Audio train arrival announcements
- TTY phone on platform of Type III station. TTY phone at concourse level of Type I and II stations. All phones to be of low level height.
- Low level Public Pay Phone(s) with variable volume level control.
- Designated wheel chair stalls are required in platform shelters (the number of stalls to be confirmed by ETS)
- Platform / shelter seating to be provided with arm rests

10.3.3 Emergency Egress/Exiting

Emergency egress / exiting must conform to the provisions of the latest editions of the National Building Code and the Alberta Building Code.

In addition the following is required:

- Egress / exiting must be coordinated with the Transportation Department and the City Planning and Development Department.
- All facility designs must be approved by the Sustainable Development Department. The Department interprets the provisions of the ABC, which applies, with a few exceptions, to all LRT facilities (refer to Chapter 1 General, Section 1.1.3.2).

10.3.3.1 Alberta Building Code (ABC) Limitations

In general, applying the technical provisions of the ABC to LRT facilities is fairly straight forward. However, applying the requirements of the Use and Occupancy regulations can be problematic. These regulations cannot be directly applied to transit facilities due to the following problems:

- Definition of *occupancy loads and the resulting units of exit width to be provided.
- Exit lengths from platform level to grade level are not defined.
- Presence of dead end condition on platforms.
- Use of tunnels as emergency exits.
- Use of open stairways as exits from platform level to grade level.
- Requirements for persons with disabilities.
- Provision of access measures by Emergency Response Department personnel.
- Recognition of the special security measures that are provided in LRT facilities

***Note:** Occupancy loads in LRT stations, based on the emergency condition requiring evacuation of that station to a point of safety, are a function of train-carrying capacities not platform areas which are categorized as “places of assembly” (NFPA 130 Appendix C – Emergency Egress).

10.3.3.2 The Basis of City of Edmonton Exiting Criteria

To address the ABC occupancy problem areas the City utilized the *APTA Guidelines and Principles for the Design of Rapid Transit Facilities (1973) to determine the exiting requirements for underground (Type I) stations with centre loading platforms.

***Note:** Originally they were referred to as the Institute for Rapid Transit Guidelines and Principles (refer to Chapter 1 General, Section 1.1.4).

The application of the APTA guidelines and principles presented below are based on the Transportation Department assumption that the average train load entering and leaving the station platform over a peak five (5) minute period under normal conditions is 1000 passengers (two 5-car trains arriving simultaneously at the platform and discharging 100 passengers from each car).

For a side loading platform configuration the number of passengers disembarking from a 5-car train on each platform is 500.

<u>APTA Guidelines and Principles</u>

- The design should incorporate sufficient capacity to exit 1000 persons from the platform within a 3 minute period.

  Based on research of the literature, the following assumptions were made for the calculations that follow:

  - Each 1100 mm width of stairway provides an exit capacity of 65 persons per minute.
  - Each 1220 mm wide escalator provides an exit capacity of 100 persons per minute.

Notes: One (1) unit of exit width is equivalent to 550 mm as per the ABC.
Stair widths are generally multiples of 550 mm units of exit width.
Escalators are generally built in standard widths of 600 mm, 800 mm, 1000 mm and 1220 mm.

To exit 1000 persons from the platform within 3 minutes, eleven (11) units of exit width are required as per the following calculation:

Exit rate is 1000/3 min. = 333 persons/min.
Each unit of stair width (550 mm) exits 65/2 = 32 persons x 3 = 96 persons in 3 min.
Therefore, 11 units of exit width are required (1000/96 = 10.4 rounded to 11)

- Based on unidirectional flow/crush load conditions, the following stairway/escalator combinations were derived:

<u>Calculation 1</u>

Provide 2 – 1220 mm escalators (2 x 100 pers/min. x 3 min.	= 600 persons)
Provide 2 – 1100 mm stairs (2 x 65 pers/min. x 3 min.	= <u>390</u> persons)
	= 990 pers exiting in 3 min.

<u>Calculation 2</u> – As above, but assume one escalator is down for maintenance

Assume 1 – 1220 mm escalators (1 x 100 pers/min. x 3 min.	= 300 persons)
Assume 2 – 1650 mm stairs (2 x 107 pers/min. x 3 min.	= <u>642</u> persons)
	= 942 pers exiting in 3 min.

<u>Calculation 3</u> – Increase stair width in case one escalator is down for maintenance

Provide 2 – 1220 mm escalators (*1 x 100 pers/min. x 3 min.	= 300 persons)
Provide 2 – 2100 mm stairs (4 x 65 pers/min. x 3 min.	= <u>780</u> persons)
	= 1080 pers exiting in 3 min.

***Note:** Assume that one escalator is not operational due to maintenance.

Calculation 3 provides the recommended escalator/stair configuration.

- Escalators should be provided based on the following distance criteria:
    - One Up escalator if the vertical distance exceeds 3.7 m
    - One Down escalator (in addition to the Up escalator) if the vertical distance exceeds 7.3 m (in addition to the Up escalator)
- The bottom of any stair/escalator combinations should generally approximate the ¼ points of a 5 car train which is *30.35m. This provides a minimum trip distance for most passengers.

  *(Length of 5 car train is 5 x 24.284 = 121.42 m/4 = 30.35 m)
- The dead end distance from end of platform to the base of the stair/escalator combination should not exceed 61 m.
- The location of exits from the concourse to street level are to be decided on an individual basis considering the following factors:
    - Distance of trip from concourse to street level.
    - Minimizing the interference with existing roadways and sidewalks and other physical obstacles.
    - The integration with other transportation modes.
- Tunnels cannot be used as emergency exits from station platforms or concourse levels.
- In Types I and II stations, elevators must be installed to provide persons with disabilities with barrier-free access from the platform to street level.

<u>Other Related Emergency Requirements</u>

- The design of the smoke removal system for underground facilities will require extensive coordination with ETS Operating and Maintenance Branches and with the City Emergency Response Department.
- The number and type of separate electrical services must be approved by the Emergency Response Department. In addition, any temporary fire protection measures necessary to permit the closing of access routes must be identified, and should be reviewed with the Emergency Response Department:

<u>Other Related Reference Documents</u>

In addition to the above and the requirements of the ABC, the Consultant should review the following documents for further information on emergency exiting:

APTA Guidelines for the Design of Rapid Transit Facilities (1991)
*NFPA 130 Standard for Fixed Guideway Transit Systems (1995)

***Note:** It is strongly recommended that the Consultant review the NFPA 30 documents due to their general acceptance by the North American Transit Industry with respect to fire safety issues.

The application of forgoing exiting criteria for Type I and Type II stations should be reviewed with ETS early in the design stage and prior to specification development.

10.3.3.3 Special Exiting Considerations

Commercial areas that are planned for incorporation within any LRT facility must be fire separated from the adjacent station areas. In addition, commercial or retail areas must independently meet all code requirements. Special attention should be directed to emergency exiting with respect to underground public retail or commercial areas.

Exits may converge in fire-protected corridors or zones provided that the units of exit width are maintained for each occupancy (i.e. units are accumulated at merged exits). Due to design limitations imposed on an underground structure, ideal locations for exits at street level on City owned property are not always available.

In cases where exit routes are in or on private property, the following criteria must be observed:

- Agreements must be entered into between the property owner and the City.
- Exit rights are required to be maintained at all times during station or underground commercial operating hours.
- In the event that re-development takes place, temporary exits must be provided pending availability of permanent exits in the new facility.
- Exit rights and agreements cannot expire on change of land or building ownership.
- Appropriate cost sharing agreements will be established.
- All agreements affecting the ABC requirements are to be irrevocable.
- Security must be maintained for both the station premises and the privately owned property.

The ABC must not be violated by any changes to structure location, mechanical and electrical systems, etc.

10.3.4 Vertical Circulation

This section provides the basic guidelines for vertical circulation conditions relating to passenger access to and from stations and to LRT trains. Each station will have specific vertical circulation requirements based on station type, access requirements and grades established as part of the overall site plan.

Access to stations and ancillary facilities is required to be barrier-free through the use of both ramps and stairs.

The location of ramps and stair entrances are a function of surface street geometry, land use requirements, ownership, access traffic needs and station external and internal integration requirements.

10.3.4.1 Ramps

Generally, for Type lll stations, only ramp access is required at both ends of the platform for public access. If space permits, also provide a stairway from the platform to ground level next to the ramp.

Ramps should meet the following general requirements:

- Provide a non-skid surface and a maximum 1:16 slope
- Intermediate landings, or rest areas, a minimum of 1200 mm in length, are to be provided every 9 m of ramp length. The Consultant must fully justify the deletion of the rest area where the ramp slope is flatter than 1:20.
- Changes in ramp grades are to be minimized.
- A handrail is to be provided on both sides of ramp 860 mm □ 60 above ramp finished surface. A bottom rail, no more than 75mm above finished floor height, is to be provided to prevent a person's foot from getting caught between the railing and post. Curbs are not acceptable in cases where snow removal is required.
- The minimum clear distance between the handrails must be 1.5 m to allow for the passing of two wheelchairs. Motorized snow removal equipment accessing the ramps is 53.3 cm in width.
- Covered ramps are preferred. The provision of heated ramps will be evaluated on an individual ramp basis for each station.

A grated drainable catchment basin is to be provided at the base of the ramp to trap grit, water and snow. The Consultant should give consideration to the installation of engineered prefabricated drain systems.

Standard of Acceptance:	Polydrain ABT Inc. ZURN Industries Inc.

For additional specific barrier-free requirements refer to Chapter 15, Accessibility and the Alberta Barrier – Free Design Guidelines.

10.3.4.2 Stairs

The preferred rise / run dimensions for both interior and exterior stairways on the Edmonton LRT System is 165 mm x 305 mm (including nosing) (refer to Figure 10.1 for stairway details).

For additional accessibility features refer to Chapter 15, Accessibility, Section 15.3.2.2.

In addition to ensuring that the applicable code requirements are met the following criteria is to be incorporated into the interior and exterior stairway design.

- Open risers are not permitted.
- Continuous railings are to be provided on both sides of the stairs.
- Stairs adjacent to an escalator must be parallel to the angle of inclination of the escalator and sized to have landings at a common level.

A 100 mm wide sweep or cleaning trough on both sides of interior stairways is considered to be a desirable feature for ease of cleaning.

The design of exterior stairway landing levels should include a grated drainable catchment basin to trap grit, water and snow. The Consultant should give consideration to the installation of engineered prefabricated drain systems.

Standard of Acceptance:	Polydrain ABT Inc. ZURN Industries Inc.

10.3.4.3 Railings

- Railings on interior stairs should be stainless steel.
- Interior stair railings should be 30 mm to 40 mm in diameter.
- Railings are required at the platform ends. They should be set back a minimum of 300 mm from the edge of the platform
- Vertical railing supports are to be welded flush to preinstalled embedded anchor plates.
- It is preferred that exterior stair and ramp railings be galvanized. Other coatings are acceptable as long as they are maintenance free.

For additional specific requirements refer to Chapter 15, Accessibility, Sections 15.3.2.1 and 15.3.2.3.

10.3.4.4 Escalators

Consideration to be given to operating environment and maintainability – entrance grating, parts storage area, proximity to exterior doorways.

In general the incorporation of escalators into the design of stations with centre loading platforms is to be based on the following:

<u>Type I Stations</u>

The minimum requirements are:

- Two escalators from platform to concourse level
- At least one escalator from concourse to street level

The final determination of the number of escalators to be provided will be dependent on platform to concourse vertical distance, entranceway and interior circulation configuration, exiting requirements. Reference should be made to Section 10.3.3.2 for additional platform / escalator interface criteria that should be considered.

Type II Stations

One escalator is the general requirement where the platform is separated from pedestrian ingress / egress movements to the station. The requirement of additional escalators is to be evaluated on an individual station basis.

Type III Stations

In general escalators are not provided in Type III stations. The future role of the station and / or future adjacent development potential may determine if provision should be made for future installation.

All escalators must meet the following general requirements:

- Conform to all applicable Acts and Codes
- Meet the LRT Specification for Escalators
- Be of standard product lines

In addition, they must have the following features:

- A minimum nominal width 1220 mm is preferred (provides 2 units of exit width). Any proposed reduction to this width will require discussion with and approval by ETS.
- The angle of inclination does not exceed 30 degrees from the horizontal.
- The running headroom is not less than 2200 mm.
- A patron activated emergency control at the top and bottom of the escalator run.
- Although reversing escalators are normally installed, operation will be limited to one direction only. Where only one escalator is provided, the normal continuous operating mode is set in the “up” direction. A keying device, used by ETS personnel only, is required to change direction.
- Be single speed capable of operating with a full load at a speed of 27.5 m per minute
- Comes equipped with an anti-rollback feature.
- Be keyed to match existing escalators in the system.
- A stainless steel handrail (sometimes referred to as an emergency guard) is to be mounted on the balustrade on the outside of the escalator handrail (refer to Figure 10.2)
- Escalator status to be monitored by the BMS.

It should be noted that glass walled escalators are not acceptable.

10.3.4.5 Passenger Elevators

Space for two elevators should be included at each station to increase flexibility for provision of access during maintenance periods.

In general, elevators will be provided in stations with centre loading platforms as follows:

Type I Stations

Provide at least one elevator from platform to street level at one end of the station. The requirement for additional elevators is dependent on entranceway, interior circulation and accessibility needs.

Type II Stations

As a general requirement, provide at least one elevator where the platform is separated from pedestrian ingress/egress movements to the station. Each station is to be evaluated on an individual basis.

Type III Stations

In general, elevators are not provided in Type III stations. The future role of the station and / or future adjacent development potential may determine if provision should be made for future installation.

All elevators must meet the following general requirements:

- Conform to all applicable Acts and Codes
- Meet the LRT Specification for Elevators
- Be of heavy duty components and construction
- Be of standard product lines

In addition, they must have the following features:

- Access locations are to be as weather protected as is feasible
- Flooring should have a non-slip surface
- Able to accommodate a minimum capacity of 1134 kg (hydraulic type preferred).
- The minimum inside dimensions must be 2032 mm x 1295 mm. (to accommodate a stretcher)
- Provision of the following security measures:
    - Design to be based on vandal-proof principles
    - At least one transparent side to be provided in an elevator car at each stop position.
    - Must be access controlled from the security monitor room.
    - Lighting must be covered with a protective transparent shield to prevent vandalism
    - Maximize the use of graffiti-resistant finish materials in the cab interior
- Machine rooms should be in close proximity to the elevator and need to be acoustically treated to minimize noise levels.
- Oil heaters are to be installed in the hydraulic elevator storage tank if the elevator is not in a heated area
- Will be equipped with a self-recharging battery pack which will maintain lighting and return the elevator to its lowest landing open the doors and render the elevator inoperative in the event of a power failure.
- All elevator keying must match the keying of the existing elevators within the LRT system.
- Must be equipped with “Home” interface for fire alarm system input signal.
- Must be equipped with a telephone connected with the ETS PABX System operated out of the Control Centre at Churchill Station. The Elevator telephone should not be located at a mounting height lower than the lowest push buttons. The Telephone cabinet can be located opposite the control push buttons.
- The operating status of the elevator is to be monitored by the BMS system.
- Must be accessible and operable by persons with physical, sensory and mental disabilities.

In addition to the forgoing, refer to Chapter 15 Accessibility, Section 15.3.2.5 for additional accessibility features.

10.3.4.6 Connecting Links

Connecting linkages into or within a station, not described in the immediate previous sections, are passageways or corridors that are internal to the station and pedways. Pedway structures generally connect to station entrances or directly to the station platform and can either be elevated (overpass) or below grade (underpass).

Passageways

The width of passageways for public use will be determined by the calculation of the exiting requirements. The minimal acceptable width of passageways for non-public use is 900 mm.

For some Type I and Type II station configurations it may be appropriate to consider heating of public passageways. Also consider heating of non-public corridors accessing service areas (refer to Chapter 12, Mechanical Systems, Section 12.5).

Public- Use Pedways (Overpass / Underpass)

- The absolute minimum width is 4000 mm.
- The minimum clear height should not be less than 2800 mm, excluding fixtures such as lights, directional signage and other required installations.
- LRT and pedway overpasses and underpasses must be sufficiently sloped towards drains or the outdoors so that standing water does not occur.

10.4 STRUCTURES AND SHELTERS

This section presents the guidelines for the main structural components of a LRT station, which is comprised of the platform, its roof, passenger shelters and the various ancillary spaces and rooms that are required to provide a functional station.

10.4.1 Platform

The platform is the key main component of a station. Restrictions to the location of platforms are governed by the station location as discussed in Section 10.3.1.

Platforms can contain a variety of elements such as passenger shelters, service rooms, fare collection area and equipment, mobility impaired access equipment (elevators), information signage and graphics, patron amenities etc.

10.4.1.1 Platform Configuration

Platforms can be either centre loading or side loading, however, a centre platform configuration is preferred over side platforms because of the efficient and flexible use of the stairways, escalators and cross platform passenger traffic. Passenger convenience is generally better with centre loading platforms, with the same platform serving two trains arriving at the same time.

The size and configuration of the platform is influenced by a number of factors as follows:

- The number of LRV's per train
- *The length of the train
- Loading arrangements
- Egress / exiting requirements
- Predicted ridership
- Needs of the patron and special user
- The track horizontal and vertical alignment
- The limits of the available LRT ROW

***Note:** The length of the LRT train will generally determine the length of the platform.

10.4.1.2 Length

In general, the platform length is to be 123 m. This length is based on 5 car trains operating on the system in the future. All Type I stations are to be constructed to their ultimate length of 123 m.

If staged, Type II and Type III platforms will be a minimum of 100 m long (to accommodate 4 car trains) with provision made for expansion to the 123 m ultimate length. Whether the

platform is to be staged or not will be determined during the preliminary engineering phase of the development of the LRT alignment.

10.4.1.3 Width

The platform width (centre loading) will normally be 8.0 to 9.0 m. Reduced platform widths for Type III stations may be allowed through the provision of ramps at both ends of the platform and / or more flexible interpretations of the ABC code interpretations.

For information, the basis for the establishment of the platform widths and existing platform widths on the Edmonton LRT system is provided in Appendix I.

<u>Factors to Consider When Establishing the Width of Future Centre and Side Loading Platforms</u>

- A tactile warning zone 915 mm wide is to be provided at the platform edge (refer to Section 10.4.1.6 and Figure 10.3).
- A desirable minimum 2500 mm of clear space should be provided between the edge of the platform and obstructions such as equipment, stairs, escalators, railings, and structural columns. The absolute minimum clearance is 1700 mm (refer to Figure 3.9).
- For centre loading configuration shelters, equipment and amenities are to be placed in the centre portion of the platform.
- For side loading configurations shelters, equipment and amenities are to be placed adjacent to the back wall.

<u>Egress / Exiting Requirements</u> (refer to Section 10.3.3.2)

Stair widths are products of multiples of standard 550 mm units of exit as per the ABC and escalators are built in standard widths.

Based on the forgoing (For Type I):

> Centre loading platforms require a minimum of two exits (5.5 units of exit each x 2 = 11 units of exit)
> 5.5 units x 550 is equivalent to 3.025 m of width at each end
> Each side loading platform requires a minimum of two exits into each or a total of four exits (3 units x 4 = 12 units of exit)
> 3 units x 550 mm is equivalent to 1650 mm x 2 = 3.3 m of width each side

10.4.1.4 Platform Height

To handle passenger boarding and alighting from Edmonton's high-level loading SD LRV's the finished platform height above top of rail for all station Types must be -890 mm +5/-15 mm (refer to Figure 3.9)

10.4.1.5 Platform Drainage

For Type I stations the platform finished surface cross-slope can be flat. The longitudinal grade will be the same as the track grade (refer to Chapter 4 Track Alignment Section 4.3.2.2).

For Type II and Type III stations the platform finish surface should be crowned at the center, sloping at a minimum of 2.0% grade to the outer edges allowing water to runoff onto the trackway.

10.4.1.6 Platform Floor Finish

Special attention must be given to the overall platform finishes to minimize the risk of injury to the public and to avoid excessive maintenance. To meet this stipulation the following features are required.

- The finished floor must be specified to have a non-slip surface.

- Floor colour and texture must be different from the flooring in the areas approaching the platform.
- A tactile warning strip providing a minimum width of 915 mm and comprised of ADA compliant truncated dome detectable warning surface is to be placed along the trackside edge of the platform.

Measured from the edge of platform the warning strip consists of: 300 mm unglazed anti-slip ribbed edge tile; 600 mm ceramic warning tile with a raised dot profile (refer to Figure 10.3).

Standard of Acceptance: Station Stop Ceramiche Caesar

Detailed finish guidelines for platform floors and other floor areas are provided in Section 10.11.4.1

For additional visibility at the platform edge provide the following:

- Lighting fixtures installed at the ceiling or underside of the roof structure casting continuous lighting on the platform edge warning strip is a requirement for Type I and Type II stations.
- For Type III stations platform lighting requirements will be evaluated on a station to station basis.

The use of tube-type lighting is not permitted.

10.4.1.7 Clearances from Platform

Horizontal and vertical clearance guidelines are given in Chapter 3 – Clearances and Right-of-Way, Sections 3.3.4.3. They are based on the SD LRV static dimensions (refer to Figures 3.1A and 3.1B) and are summarized below for convenience.

<u>Horizontal</u>

- The clearance distance from centreline of track to the finished edge of platform is 1405 ± 5 mm.
- The minimum clearance distance from centerline of track to the inside face of the station outside wall support foundation is 2300 mm (refer to Figure 3.9).
- The platform must be cantilevered from its supports to provide a continuous 900 mm clear set-back beneath the outside edge of the platform. This set-back forms a refuge area for any person who falls from the platform and may be trapped due to a train entering the station. In special circumstances, subject to the approval of ETS, this set-back may be encroached upon by intermittent supports or equipment.

<u>Vertical Clearances above Platform Surface</u>

- Any station element that could be targeted for theft or vandalism (e.g. light fixtures, speakers, CCTV cameras, signage etc.) should be located a minimum of 3050 mm above the finished platform surface. The possible use of benches, waste receptacles etc. by vandals to stand on to reach these elements should be considered by the Consultant in the final placement of all items.
- Horizontal elements such as canopy framework, sign units etc. that could be attractive for climbing should be located above the 3050 mm minimum distance.
- Vertical elements should be designed to deter climbing.

10.4.1.8 Catenary Clearance Above Track

The minimum vertical clearance distance is governed by the overhead catenary clearance requirements as outlined in Chapter 6, Traction Power, Section 6.5.3.7.

The absolute minimum distance from the top of rail (TOR) to the underside of the catenary contact wire support structure is 4200 mm for Type I and Type II stations and in tunnels, where vertical clearance is normally restricted (refer to Figures 3.10, 3.11, and 3.16).

For Type III stations (no roof over the trackway) (refer to Figure 3.23) the minimum distance from top of rail to the underside of the catenary contact wire support is 4800 mm.

10.4.1.9 Trackway Drainage

In Type II and Type III stations, perforated drainage pipe is to be installed on the outside of the track along the inside of the station wall or ballast curb to divert water runoff from the platform away from the station footprint (refer to Chapter 12 Mechanical Systems, Section 12.7).

10.4.1.10 Service Outlets

Service outlets required for power, water, and vacuum systems are as follows:

- Electrical – provide 15 A/120 V split receptacles at 20 m intervals under both sides of the platform overhang.
- Electrical – provide 15 A/120 V split receptacles at all landings of stairs and escalators.
- Electrical – provide twist lock receptacles at locations that are accessible by the public.
- Vacuum outlets (galvanized steel) - provide at 20 m spacing under both sides of the platform overhang (refer to Chapter 12 Mechanical Systems, Section 12.3.1.9 and Figure 12.1).
- Water Hose Bibs – provide one (1) tamper proof hose bib near the center of the platform in Type II and III stations only. If the central location is not feasible, provide a bib at both ends of the platform.

10.4.1.11 Service/Maintenance Personnel Access Requirements

A minimum of two (2) parking stalls for City operations and maintenance service vehicles are required at each station in close proximity to a station entrance. Refer to Section 10.4.4.4 for parking requirements when staff is housed at a station.

Stairway access from the platform to track level must be provided at each end of the platform for Type I and II stations. For Type I stations, concrete steps should be used. Steel ladder rung steps should be provided on Type II stations. Ramps for emergency egress by the public also may be provided. To discourage general use by the public, access must be secured by a gated barrier. A gate at the platform centre is preferred rather than a swinging gate at the edge.

10.4.1.12 Platform Crawl Space

The underside of the platform for all station types must be designed to provide an accessible crawl space for inspection/maintenance purposes. A hatch or doorway at track level is the preferred access method. The provision of a man-hole type access from the platform finish surface should be avoided. Lighting adequate for routine maintenance and inspections along with adequate ventilation must also be provided.

Additional requirements include:

- The provision of drains to intercept any penetrating water
- The placement of a minimal lift (50 mm approx.) of concrete on any exposed soil within the basement area to reduce the potential for mould formation.

10.4.1.13 Platform Basement Level

Space limitations on the platform level of Type II and III stations may require the examination of providing a basement to house some or all of the service areas that are required. The placement of electrical and communication rooms in a basement is not acceptable unless assurance can be provided by the Designer that water will not be able to enter those areas. All other options must be fully evaluated (economically and functionally) and compared to this configuration during preliminary engineering. If a basement is to be provided, only stairway

access is required for Type III stations. Elevator access may also be a means of access if included in the design of a Type II station.

10.4.2 Roofs

Roof structures will be different for each station type as follows:

10.4.2.1 Type I Stations

All existing underground stations are constructed under existing roadways. The station roofs must be designed to carry the road slab above.

Special waterproofing measures (membranes etc) must be designed and incorporated into the roof elements to prevent water leakage into the underground station from damaging structural and finish components (refer Section 10.12.1)

10.4.2.2 Type II Stations

Two types of roof structures can be provided; “enclosed” or “partially” enclosed.

The “enclosed” type covers the platform, station amenities and tracks. It forms an integral part of the supporting wall structure located on the outside of the tracks. The ends of the station are open to allow the trains to enter the station area.

Design features that are generally incorporated are:

- The provision of skylights to allow natural daylight to reach the platform surface.
- The provision of roof accessibility systems such as, hatches and retractable ladders, for cleaning and maintenance.
- Fall protection measures that form a permanent part of the roof structure (refer to Section 10.4.2.4.
- The provision of heat traced (refer to Chapter 11, Electrical Systems, Section 11.8) gutters and down spouts for roof drainage tied directly into a storm drain.
- The provision of snow stops.

The “partially” enclosed type is comprised of a climate controlled building structure over the portion of the platform that contains the stairways, escalators, elevator, service rooms and patron waiting area. In addition, a Type III “open” style roof as described in the next Section may cover the rest of the outdoor area of the platform. The tracks are not covered. The design features listed for the “enclosed” station will, for the most part, apply as well.

10.4.2.3 Type III Stations

The provision of a roof on the neighborhood style of station is optional. If a roof is provided the station is generally referred to as having an “open style”.

<u>Without Roof</u>

If there is no roof over the platform, sheltered enclosures with roofs are required.

<u>With Roof</u>

The roof can cover the majority or all of the platform area depending on its height above the platform level. In addition, sheltered enclosures with roofs may be required (refer to Section 10.4.3).

Birds, primarily pigeons, roosting on the structural support members of Type II and III roofs are problematic. The Consultant will consider the use of techniques such as sloping surfaces, bird nails etc. to deter this activity as much as possible.

Heat traced gutters and down spouts for roof drainage tied directly into a storm drain must be provided.

The Consultant must evaluate the need for a designed roof access system (refer to Section 10.4.2.4).

10.4.2.4 Fall Protection Measures

For Type II and Type III roof structures that require ongoing cleaning and inspection for maintenance purposes the Consultant must consider the incorporation of an engineered fall protection system, where fall protection is required.

- Approved systems are available and should be reviewed by the Consultant for applicability.
- The fall protection system must be designed by a specialist consultant with proven expertise in the design of fall protection systems.
- Convenient and safe access measures and devices, including the provision of a roof access hatch for service personnel must be considered in the design.

10.4.3 Sheltered Enclosures

10.4.3.1 Entranceways

Sheltered entranceways should be designed to reflect existing adjacent development yet still maintain the Edmonton LRT system identity. The design should take into account the following requirements:

- Be clearly identified with appropriate signage.
- Floors in Type I and II stations must be sloped towards the street to prevent the entry of water from the outside sidewalk.
- Runoff water from roofs must be directed away from the station entry sidewalk to prevent ice build-up and slippery conditions.
- For situations where down-ramps or stairways end near a below grade entranceway drains must be installed in front of the entranceway doors (refer to Section 10.3.4.1 for acceptable drainage systems.
- Type I and Type II station entranceways must be equipped with lockable self-closing doors to provide security and prevent the entry of rain and snow.
- Overhead electric infrared, gas space heaters, steam or hot water piping and forced air are acceptable heating methods for Type I and Type II station entranceways.
- Incorporate the provisions of the Alberta Barrier-Free Design Guide.

In addition to the forgoing refer to Chapter 15, Accessibility, Section 15.3.2.6 for additional accessibility features.

For the construction of Type I, or below grade Type II and III entranceways, techniques must be utilized that will prevent structural damage due to the penetration of ground water. Specifically these techniques should:

- Minimize differential settlements between the entranceway and the station substructures.
- Maintain the integrity of the waterproofing membrane between the two substructures.

10.4.3.2 Shelters on Platforms

Sheltered enclosures, preferably with roofs, to protect waiting patrons from wind, rain and snow must be provided on all Type III station platforms. Shelters or vestibules may also be required on Type II “enclosed” platforms.

The number of shelters to be provided and their size will be dependent on the following factors:

- Degree of overhead protection.
- Orientation of the platform to prevailing winds.

- Whether the station is adjacent to a Transit Centre and whether the Transit Centre is designed to accommodate High Speed Transit or regular bus transit.
- Projected Transit Centre passenger loadings.
- Whether the platform is staged (i.e. to be expanded to a full 5-car length at a later date).
- Area required for signage, fare equipment and communication devices.
- Amount of interior bench seating including the provision of spaces for persons in wheelchairs required.
- Bench seating should also to be placed in open platform areas subject to space availability. Further details on benches are provided in Section 10.6.5.1.

The following features must be considered in the design development:

- Heated shelters are preferred.

  Both overhead electric infrared and gas heaters are acceptable as heating devices, however gas is preferred if the shelter has no roof. If gas heaters are selected they must have burners that will resist wind blow-out. Heaters will be automatic thermostatically controlled by the BMS system including manual override control (refer to Chapter 8, Communications, Section 8.3.5.16).

  Consideration should also be given to the placement of heaters in other areas of the platform waiting area particularly in the vicinity of fare equipment.

- Where stairs, escalators and elevators are provided, enclosures or shelters should be incorporated into the platform design to keep these conveyances free from intrusion from snow, ice, rain and wind (refer to Section 10.4.2.2).
- Roofed shelters should include heat traced gutters and downspouts (hidden from view) tied into platform.
- Shelter walls should be made flush with the platform (no air gap). Provision must be made to ensure drainability (for cleaning).

10.4.4 Service Area/Room Requirements

All stations require rooms or dedicated areas; for housing a variety of equipment and related material, for storage of cleaning materials, washrooms, concession booths or kiosks, ETS staff, cash vaults etc. The requirement for these facilities will be determined on an individual station basis by the Consultant, in conjunction with ETS.

Where required, the specific requirements are:

10.4.4.1 Electrical/Mechanical Equipment Rooms

- Electrical Service Rooms - Two types of rooms may be required; one to house high voltage equipment, the other to house all other electrical equipment.

Note: If possible, locate the UPS in its own room.

- Communication Service Room - CCTV and PA racks, telephone system backboards and other communications related equipment. Room must be air conditioned.
- Signal Equipment Room - Signal relay and signal power equipment. Room must be air conditioned.
- Traction Power Substation/Booster Substation Room – High voltage transformers, switchgear, rectifiers etc.

Note: The TPSS can be a stand-a-lone building or a room in a station. Chapter 6, Traction Power provides the guidelines for this facility.

- Mechanical Service Rooms - Pumps, fans, motors,
- Vacuum room – houses a central vac system. A separate room at platform level is preferred (refer to Chapter 12, Mechanical Systems Section 12.3.4).

- Elevator Machine Room

All service rooms must be painted (refer to Section 10.11.4.4 and must be fire alarmed. Fit doors with sidelites or windows if doors swing outwards on to platform.

Refer to Appendix II for typical room sizes.

10.4.4.2 Utility/Janitorial Storage (All Station Types)

This room is required for storage of cleaning supplies and related equipment and should be located at platform level. Fit doors with sidelites or windows if doors swing outwards on to platform. Provision in Type III stations will be determined by ETS. Where provided, the following services / appurtenances are required:

- Electrical service for the charging of battery operated portable equipment.
- Water service
- Built-in shelving or cabinets
- Wash-basin built into a counter or vanity
- Mop sink with appropriately sized backsplash
- Space for floor Scrubber
- Space for snow clearing equipment
- Hot Water tank (possible optional location)

Refer to Appendix II for typical room sizes.

10.4.4.3 General Storage (Type I & Type II Only)

This must be a secure room for the storage of spare parts, contractor's materials and equipment, etc.

10.4.4.4 Staff Rooms (Type I & Type II Only)

Dedicated rooms for ETS staff performing the following functions may be required. ETS is to confirm the number of staff to be housed and related services to be provided. The following are typical requirements. They do not necessarily apply to all stations.

<u>Security "Beat" Room</u>

A "Beat" room is an office occupied by ETS Security staff who monitor the safety and security of LRT patrons and the station non-public areas. They function as on-line workspaces only i.e. they are not deployment locations.

The following space/services/amenities are required:

- Sized to accommodate up to four (4) staff
- Air conditioned with temperature control
- Up to four (4) workstations
- Computer and printer service connections
- Service connections for phone and fax
- Windows with one-way glass for monitoring purposes
- Horizontal blinds on all windows
- Lighting is dimmable
- Vinyl flooring
- Sink and vanity
- One microwave service connection
- Parking in close proximity to the station for one (1) service vehicle.

Door entry is by card access.

A staff washroom is required in the station.

LRT Inspectors Office

A combined office/lunch room is to be provided to accommodate up to 3 persons. They will report to this station/room at the start of their shift.

Space/services/amenities to be provided are as follows:

- Change area with lockers
- One computer work station
- Computer and printer service connections
- Filing cabinet
- Service connections for phone and fax
- Service connections for microwave and small fridge
- Heated parking and secured parking in close proximity to the station for one (1) service vehicle
- Nearby heated parking (or with plug-ins) for two (2) staff.

Door entry is by card access.

A staff washroom is required in the station.

LRT Maintenance Crew Room

A combined office/work/lunch room is to be provided to accommodate up to six (6) persons. This room will function as a deployment location. Staff will be required to report to this location at the start of their shift.

Space/services/amenities to be provided are as follows:

- Work table
- One computer work station
- Computer and printer service connections
- Service connections for phone and fax
- Vinyl flooring
- Service connections for microwave and small fridge
- Sink and vanity
- Eyewash station with dedicated water service
- Nearby secure storage for tools and materials. Tools may include gasoline powered equipment (i.e bobcat)
- Heated and secured parking in close proximity to the station for up to three (3) service vehicles
- Nearby heated parking (or with plug-ins) for up to six (6) staff.

Each station designated to house this operational function must provide male and female staff washrooms. A change area with lockers that are sized to allow winter clothing to dry is to be provided in each washroom. Showers are not required.

All staff rooms should be fire alarmed.

10.4.4.5 Washrooms

Staff Rooms

Refer to above Section 10.4.4.4 for washroom requirements when security, inspectors and maintenance staff are housed in the station.

Train Operator Washrooms

A washroom dedicated for train operator use must also be provided in any station that is designated as a “terminal” or “end of the line” station even if the duration of that function is temporary.

- A single “unisex” washroom is generally sufficient.
- A phone for the Train Operator’s use is to be provided inside the washroom.
- A water spigot for drinking water is to be provided inside the washroom.
- If a kiosk or concession booth is located in the station, and there is no public washroom, the washroom must be “barrier-free”.

Public Washrooms

Public washrooms must be provided in all LRT stations with the following characteristics:

- Joint LRT station/bus terminal with significant passenger boarding/alighting and transfer activity. The station may or may not have a public washroom if there exists a public washroom at the adjacent bus terminal.
- Major “end-of-line” or intermediate LRT stations with park and ride lots.
- Public washrooms would not be included at intermediate “urban-style” LRT stations.
- Consideration to be given to cleaning and extraction of foreign materials in drainage system.

Public washrooms will be access controlled; and *barrier-free (refer to Chapter 15, Accessibility, Section 15.3.3.3 for additional specific requirements).

Directional signage leading to public washrooms must be provided in accordance with the LRT Graphics Standards Manual. Provide washroom signs on the Exterior Entrance signs.

Public Washroom Access Features

Washrooms must be provided with the following special access features:

- Single occupancy unisex washrooms are preferred.
- Locking/unlocking of all doors controlled remotely through ETS Security.
- CCTV coverage of the exterior of the washroom entrance doorway.
- A hands free direct dial phone connected to ETS Security located on the exterior wall near the washroom doorway for persons to request access.
- A power door opener to automatically open the washroom door once ETS Security remotely activates the door release. (Note: the automatic opener must not unlock the thumb lock used in single occupancy washrooms).
- Include doorway sensor to prevent closing on occupant.
- An exterior lit “Occupied” sign for single occupancy washrooms, located near the washroom doorway and activated by motion sensor inside the washroom. The sign must be visible to ETS Security via CCTV.
- Single occupancy washrooms to be lockable from the inside using a thumb latch.
- An automatic door paddle located adjacent the door inside the washroom allowing the door to open automatically when the paddle is pressed.
- An interior hands free direct dial Emergency Phone to ETS Security mounted on a wall of the washroom.

Fixture/Finish Standards for All Washrooms

- Toilet partitioning to be floor mounted steel panels.
- Toilet stall latch to be surface mounted dead bolt type.
- Coat hooks to be installed preferably on the stall door above head level.
- A fold-down infant change table is to be mounted on a wall inside of the washroom.
- Glass or polished metal mirror.
- Towel dispensers and disposal unit.
- Wash-basins should be built into a counter or vanity.
- Automatic water controls and flushers.
- Heating.
- Fixtures to be stainless steel and vandal-proof.

- Urinals to have proximity sensor flush valves.
- Provision should be made for hot water service. Determine how the water is to be heated (refer to Chapter 12, Mechanical Systems, Section 12.3.3.3.
- Floors to be tiled.

Soap dispensers and toilet tissue dispensers are normally supplied by ETS.

The Consultant should evaluate the potential for the installation of a self-cleaning toilet system ("Clean Latrine" or equivalent).

All washrooms should be fire alarmed.

10.4.4.6 Cash Vaults

ETS and the City Corporate Services Department will jointly determine the location of the cash vault. ETS will provide the Consultant with the detailed design and related installation requirements.

10.4.5 Transit Centre Facility

The Bus Fleet and Facilities Section of ETS has developed Design Guidelines for Transit Centres. These guidelines must be followed by the station design consultant when this type of facility forms part of the overall station design and construction package.

10.5 FARE COLLECTION EQUIPMENT

10.5.1 General

The Edmonton LRT System uses a Proof of Payment fare system. The fare collection system is comprised of ticket vending and validation equipment and a computerized data collection and information system.

Passengers purchase tickets and passes from ticket vending machines located within the LRT stations. Pre-purchased tickets or tickets purchased from other locations must be validated by ticket validating machines, that are also located within the stations.

All fare collection equipment within each station is inter-connected to form a local area network. Data is transmitted to a central computer located at the D.L. MacDonald LRT Maintenance facility via the LRT fibre optic network. This computerized system is called the Central Data Collection and Information System (CDCIS).

Fare enforcement is carried out by ETS Security Officers who randomly check passengers on trains and in Station "Fare Paid Areas". ETS Security Officers may also conduct a fare payment check of all passengers as they exit the station platform.

All fare collection equipment is designed, tendered and installed under the direction of ETS. ETS will provide the station consultant with final design details such as location, spatial requirements, fastener details and power or other hook-up requirements early in the design phase, prior to specification development.

10.5.2 Fare Equipment Types

<u>Ticket Vending Machine (TVM)</u>

The ticket vending machine (TVM) dispenses both tickets and passes (when purchase is made by coins or bills). Each machine is normally ready to respond to a customer selection when it is in the ready state. A programmable display screen and pushbuttons are provided for the customers to complete a transaction. An ATM style display screen directs the customer through the steps of the transaction via pushbuttons located beside the screen. The TVM cabinet includes a lighting valence to illuminate the front of the machine.

In general, each ticket vending machine performs the following functions:

- Accepts Canadian and U.S. coins and Canadian bills
- Accepts ETS specified tokens
- Responds to a customer's input
- Displays the amount due based on the customers fare selection
- Prints and issues tickets and passes
- Displays instructions and notices
- Issues change if excess payment is made and change is available
- Returns monies deposited if a transaction is cancelled or terminated
- Registers and stores accounting data
- Provides backlit 15" TFT LCD computer display screen instructions in both English and French
- Provides audio output of messages and instructions
- Contains a security, alarm and heating system
- Communicates over a network to receive commands and also transmits and receives data regarding sales, revenue, accounting, machine status, maintenance status, and security information
- Provides a customer information display to indicate machine status and along with ETS customer information messages
- Can be up-graded to add credit/debit cards and/or smart card readers

The TVM is readily accessible to persons with disabilities and complies with relevant requirements of the *Americans with Disabilities Act (ADA). The ADA requirements can be summarized as:

- All operable controls should be between 380 mm and 1370 mm of the finished floor from a side reach parallel approach to the TVM. The minimum clear space wheelchairs require for a parallel approach to the TVM is 760 x 1220 mm.
- Displays, raised letters, Braille and other instructional information should be no more than 1525 mm from the finished floor.
- Pushbuttons and other operable controls are to be identified with high-contrast raised lettering at least 0.75 mm high; Braille instructions must also be at least 16 mm high.
- No objects should protrude more than100 mm from the finished floor to a height of 2030 mm on the front surface of the equipment.
- The TVM will provide audible voice instructions when demanded by the customer.

***Note:** In the absence of applicable Canadian or Provincial legislation the requirements of the ADA are to be followed.

The Ticket Vending Machine shape and dimensions are shown on Figure 10.4.

<u>Ticket Validators</u>

Ticket Validators are required to validate tickets that have been purchased in bulk from Ticket Vending Machines or at a location remote from the station. Each validator communicates to the nearest ticket vending machine via a serial cable. Validators may be installed up to 50 m from the nearest ticket vending machine and must utilize a serial connection suitable for such distances. Each ticket vending machine is capable of communicating with one other validators.

Validators perform the following functions:

- Validates a ticket automatically upon proper insertion of a ticket. Validation consists of imprinting ticket validator number, date, time in the specified location on one side of the inserted ticket.
- Registers the total number of tickets validated by an electro-mechanical counter.

- Capable of detecting basic internal malfunctions and annunciates failures to the CDCIS via an adjacent TVM.
- Communicates with an adjacent TVM to receive clock synchronization and configuration parameters.
- Alerts customers of a malfunction by a visual out-of-service annunciator.

Ticket Validators are a readily accessible to persons with disabilities in accordance with the ADA provisions (also refer to Chapter 15, Accessibility, Section 15.3.3.7).

Refer to Figure 10.5 for details of the stand that supports the Validator.

10.5.3 Fare Equipment Placement

The layout of the equipment is dependent on station design in accordance with the following criteria.

Type I and II Stations

Complex stations comprising of platforms and mezzanines or concourse levels will generally have the fare collection equipment located on the mezzanine / concourse adjacent to the platform access points. In these stations the platform is considered a “Fare Paid Area”. The quantity of equipment will depend upon the anticipated usage but at a minimum consists of two ticket vending machines and two validators at each station platform access point.

Ticket machines and validators can be clustered together or spread out around the platform access point to form a clearly visible fare collection area. Fare collection equipment should be appropriately spaced to avoid crowding and interference. The Consultant must take into consideration the following spatial requirements when designating fare equipment locations:

- Fare collection equipment should conform to ADA parallel approach requirements. The minimum clear space wheelchairs require for a parallel approach is 760 x 1220 mm.
- Fare collection equipment spacing must consider the TVM door swing (refer to Figure 10.6, TVM Anchoring Details). Adjacent fare collection equipment cannot block or its use impeded when the TVM door is open.

ETS will make the final determination as to the number of pieces of fare equipment and the location.

Type III Stations

Simple stations will generally have the fare collection equipment conveniently located in a central area on the platform, easily accessible from a number of platform access points. They should be clustered together to form a fare collection site on the station platform, however they should also be spaced appropriately to avoid crowding and interference.

The quantity of equipment will depend upon the anticipated usage. ETS will make the final determination as to the number of pieces of equipment and their location on the platform.

Provision is to be made (junction box with flush mounted brass cover plate, and conduit) at each platform end for the future installation of TVM’s and Validators. Installation will be subject to projected passenger demand.

Ticket Vending Machines should be located in an area that has overhead shelter protection. Validators can be located in open areas if the sheltered area is not in close proximity. In this situation shrouds over the validator heads must be provided.

10.5.4 Central Data Collection and Information System

All ticket vending equipment is connected to the Central Data Collection and Information System (CDCIS). CDCIS automatically monitors and controls all equipment (including validators through the TVM) connected to the network.

The main features of CDCIS are:

- A local area network (LAN) at each LRT station connects the fare collection equipment together, which is typically terminated in the station communications room.
- A network interface device connects the station LAN to the LRT fibre optic backbone system. The fibre optic system is capable of supporting up to 10 ticket vending machines, which may be located up to 300 m from the communications room.
- A server that is located at D.L. MacDonald LRT Maintenance facility in North-east Edmonton.
- Remote workstations that are located in designated ETS facilities and other City departments.

10.5.5 Interfacing Requirements

Each ticket vending machine provides a signal to the CCTV Pelco system via a “dry contact” alarm relay to allow for monitoring by CCTV. Wiring from the ticket vending machine is terminated at the control panel in each station communication room.

10.5.6 Power Supply

- Each ticket vending machine requires a dedicated 20/120 VAC ampere, electrical circuit.
- Validator power consumption is 50 watts and requires 15/120 VAC ampere service. Multiple validators must be on separate circuits from each other.

Refer to Section 10.5.9, Design References, for sample wiring diagrams.

Fare equipment emergency power will be provided through the station emergency power supply.

10.5.7 Conduit, Cabling Requirements

Two conduits are required for each piece of fare collection equipment, one for the power supply wiring, and the other for the communication cable. Conduits must be appropriately sized for their intended use.

The type of equipment and installation location will determine the electrical connection requirements. Most installations will have conduit stub-ups (floor) rather than flush mounted boxes. 75 mm stub-ups must be provided. For uncovered stations measures must be employed to ensure that moisture is not able to access the conduit and the connection device to the fare equipment.

Communication cable requirements are as follows:

- Validators - CAT 5e only. If the run to the node is over 100 m the Validator can run to the nearest TVM otherwise they run back to the Communication Room.
- TVM’s - for runs greater than 100 m require SM fibre pair to each TVM and twisted shielded pair for BMS.

10.5.8 Anchorage Requirements

All fare equipment will be floor mounted and will require the following anchorage provisions:

<u>Ticket Vending Machine</u>

A “Hilti” type of insert is acceptable for placement in the platform floor. A cap screw or threaded stud can be used however the cap screw is preferable due to the weight of the TVM.

<u>Validators</u>

Female threaded inserts are to be embedded in the concrete at the time the platform floor is poured. The location of the inserts will be based on the template provided by the manufacturer. A “Hilti” type insert is also acceptable.

10.5.9 Design References

The following wiring diagrams can be obtained from ETS. They are located at the D.L. MacDonald Maintenance Facility.

- Typical LRT Fare Equipment Installation Wiring Diagram
- Typical Vendor AC/Input Connections Wiring Diagram

10.6 STATION AMENITIES

Amenities provided at LRT stations enhance the comfort, safety, and convenience for passengers as they are waiting to board the train or are leaving the trains to transfer to bus transit or other modes.

They can include:

- Artwork
- Concession Booths / Kiosks
- Vending and Electronic Equipment
- Information Panels
- Pay Phones & TTY phone
- Furniture such as benches
- Washrooms for use by the public (refer to Section 10.4.4.5)
- Clock Tower
- Bike Racks
- Garbage/Recycling Receptacles

10.6.1 Artwork

The City of Edmonton has adopted C458C “Art in Public Places Policy” for incorporating artwork in public areas of LRT facilities.

The Sustainable Development Department administers the Art in Public Places Program. Through the Edmonton Arts Council, they will oversee the selection of the Artist and Artwork.

The Consultant and the Artist will coordinate their activities to ensure that the criteria and restrictions for the placement of artwork as listed below are adhered to:

- Does not adversely affect pedestrian flow patterns
- Does not cause areas of concealment for people to hide behind
- Does not cause the opportunity to gain access to restricted areas (i.e. do not locate in such a manner as to allow climbing to areas not normally accessible to the public)
- Does not pose a risk of injury to the public (example: sharp points, slip/fall hazard, etc.)
- Does not block security camera viewing areas
- Does not interfere with the effectiveness of the PA System
- Does not block access to Fare Collection Equipment, Information Panels or Emergency Phones
- Must meet fire codes with respect to flammability, off-gassing, etc
- Must be vandal resistant
- A minimum 3050 mm clearance from the 600 V overhead catenary must be maintained
- Must not be located within the dynamic clearance envelop of the LRT trains
- Must not interfere with the operation and serviceability of the station
- Must meet all building codes
- Must not be incorporated into temporary structures, hoardings etc.

10.6.2 Concession Booth or Kiosks

The provision of a concession booth and its location within the station (Type I & II Stations only) will be evaluated on a station-by-station basis by ETS. If deemed a future requirement the following service connections will be required to be installed at the proposed location:

- Power (a separate metered electrical panel may be required)
- Water
- Sewer
- Telephone
- Data line

10.6.3 Vending and Electronic Equipment

A variety of vending equipment (provided and placed by Vending Equipment suppliers) may be located within the various station public areas or adjacent to the station entranceways, subject to the approval of ETS.

Fare Collection Equipment has been dealt with previously in Section 10.5.

The following are the most common types of vending machines that can be installed. ETS has established general location criteria for each.

<u>Confectionary, Hot and Cold Drink Vending Machines</u>

- Locate in main entrance areas but away from the entrance doors to reduce the potential for vandalism.
- Strive to locate drink machines next to confectionary machines. Both types of machines require individual electrical service.
- Hot drink machines require water service.

<u>Paid Newspaper Boxes</u>

- Locate at the outside of the station main entranceways.
- Provide, where practicable, vendor vehicular access in close proximity to box locations.
- Provide an anchoring post or device to secure the box.

<u>Free Newspaper / Magazine Boxes</u>

- Station exteriors at main entranceways are the preferred locations although interior passageways are also acceptable.

<u>Automated Teller Machines (ATM)</u>

- Locate in the general vicinity of the fare collection equipment.
- CCTV coverage of the location will be required.
- Electrical and data line service is required.

The Consultant will review the feasibility of providing the following *amenities. The need for these installations must be reviewed with ETS early in the station design phase.

<u>*Multi Media Terminals (Internet on a Payphone)</u>

- Located on the platform and the interior of the entranceways.

<u>*Single Use Computer Terminals</u>

- Generally located in interior passageways away from congested areas.

<u>*Electronic Information Screens (generally providing an advertising component)</u>

- Generally located overhead or on the floor of the platform area.

10.6.4 Pay Telephones

In general, pay phones are to be located on the platform and the interior of the entranceways. Consideration should be given to locating pay phones at the exterior of the station entranceway.

The final location of any pay phones will be determined in conjunction with Telus Communications as the primary pay telephone service provider (also refer to Chapter 8, Communications, Section 8.15). As indicated previously a TTY phone for the hearing impaired is also required.

Phone Enclosure Standard of Acceptance: Jaro Industries Jaro Inc. J-400

10.6.5 Furniture Items

In most instances, the normal furniture related items placed in or near stations are benches for patron seating, and garbage/recycling receptacles. ETS has established the following objectives for these installations:

- Enhance the comfort and convenience for the transit patron.
- Be functional and be compatible with the aesthetics of the station.
- Be vandal proof and graffiti-resistant.
- Be placed so as not to impede passenger flows.

The Consultant must develop station furniture requirements and their location and coordinate with ETS early in the design phase of the project, prior to specification development.

In general, furniture, and more specifically garbage and recycling receptacles, should not be located near fare equipment.

10.6.5.1 Benches

Platform benches must be provided. They must meet the following criteria:

- Are durable and maintenance free (metal is preferred).
- Provide armrests to enhance barrier-free accessibility.
- The location of platform seating should not interfere with access to overhead lighting and equipment.

The seating capacity to be provided (including spaces required for wheelchairs) will be developed by the Consultant and reviewed by ETS (refer to Section 10.4.3.2).

10.6.5.2 Garbage and Recycling Receptacles

Fixed garbage and recycling receptacles must be provided at all stations in accordance with the following criteria:

- The location must allow for easy service access and meet the risk mitigation criteria identified in Appendix III.
- The number of receptacles provided should be based on the station layout and the projected passenger volumes and approved by ETS.
- Garbage and recycling receptacles in accordance with ETS standard will be supplied by ETS for placement at each station entrance.
- Garbage and recycling receptacles shielded from the wind will be designed in accordance with the drawing shown in Figure 10.10. The design for those that are exposed to wind is modified slightly.

10.6.6 Bicycle Racks

Secure bicycle racks are to be provided at all LRT stations, wherever possible. The number of racks/capacity will be confirmed by ETS during the preliminary engineering phase of the station design development.

Design Requirements

The Consultant should review off-the-shelf bike rack design criteria and installations at the existing LRT stations. The ETS preference is the "Sheffield Parking Stand" (refer to Figure 10.7). It has the following main features:

- The rack or stanchion should be constructed of galvanized pipe and securely anchored (vandal-proof) to the concrete base.
- The pipe diameter should be 50 mm (minimum) to 65 mm (maximum) in order to accommodate most bicycle security locks.

Location

- To promote usage and security, racks should be situated adjacent to the station entrances where there is high volumes of pedestrian activity, but located so they do not interfere with pedestrian flows.
- They should be placed on concrete paving and in protected areas, if possible.
- CCTV camera coverage of area is desirable.

10.7 SIGNAGE AND BRANDING

ETS has developed guidelines for designing, implementing and maintaining the information signage, graphic systems and branding elements within the LRT system. The intent of the guidelines is to:

- Utilize in a consistent manner ETS' corporate identity and branding requirements.
- Provide consistency in regards to the use and placement of visual elements, materials, finishes, colour and typography.
- Establish a functional and contemporary wayfinding system.
- Promote legibility and readability of pictograms and typographical elements.

10.7.1 Types of Signage – Summary

Both static and electronic signage is required on or adjacent to the platform. They include:

- Wayfinding
- Station Identification
- LRT System Map
- Transit Information Panels
- Train Arrival (Variable Message Signage)
- Proof of Payment
- Emergency phone
- Pay phone/TTY
- TVM / Validator
- Restricted Access
- No Trespassing
- No Smoking
- Surveillance Notification
- Park and Ride signage

All signage must conform to the LRT Graphics Standards. The LRT Graphic Standards are included in the ETS Brand Manual.

10.7.2 Branding

The objective of the ETS branding program is to enhance ETS's corporate identity by providing a consistent visual image as well as to enhance the total customer experience by providing customer focused passenger comfort and convenience amenities.

Primary visual branding is achieved through the use of corporate colours in materials and finishes, ETS logo signage and clock towers.

ETS Corporate Colours

Incorporate, where appropriate, ETS's blue and silver corporate colours into the architectural features of each station. The use of corporate colours however needs to be balanced with the overall architectural treatment of each station. A primary design objective is to give each station a unique appearance so that passengers can view them as recognizable stops, while at the same time being recognizable as an ETS facility.

ETS Logo

Locate large scale high visibility "ETS" logo/brand signage on station exterior walls. Preference is to be given to locations adjacent building entrance points, and large scale walls or flat surfaces facing public approaches. Suitable locations are to be determined jointly by the Consultant and ETS. Logo details will be provided by ETS.

All branding signage must include the following:

- Anodized, chrome plated or powder coated metal lettering pinned to the building surface.
- Diffused halo LED lighting placed behind the lettering.
- Sign transformers and electrical access located inside the building.

Clock Tower

The installation of a clock tower in a highly visible location is required at all LRT stations. Clock towers must utilize GPS technology and digital components for time accuracy and low maintenance. Electrical service will be required with the controller placed in the electrical room. Space permitting, a small scale tower should also be located on the station platform.

If a Transit Centre is located adjacent to the station, the main (large scale) clock tower must be located on the Transit Centre island. The Consultant in conjunction with ETS will determine the location.

The clock tower must be constructed to the approved and accepted design/engineering standards as supplied by the City of Edmonton.

Comfort and Convenience Amenities

Customer comfort and convenience amenities as listed below are provided in LRT stations as part of the ETS branding program. Additional amenities may be provided if proven technologically and economically justified. Section references are noted for amenities discussed elsewhere in these Guidelines.

- Environment - Refer to Chapter 1 Section 1.1.6 Sustainable Building Policy.
- Platform Roofs and Sheltered Enclosures - Refer to Sections 10.4.2 and 10.4.3 for Platform roofs and sheltered enclosures respectively.
- Platform Seating - Refer to Sections 10.6.5.1.
- Public Washrooms - Refer to Section 10.4.4.5.
- Transit Fare Products - Refer to Section 10.5 for current Fare Equipment technology. Future enhancements will be made as the need dictates.
- Platform Time Display – In addition to the clock tower on or adjacent to the platform, time will be displayed digitally by Variable Message Signs (VMS) mounted overhead along the platform. Typically six (6) signs are installed, three on each side of the platform. They are

positioned to provide maximum visibility to LRT patrons (refer to Chapter 8 Communications and Control, Section 8.14.9.
- Retail Space - Refer to Section 10.6.2
- Wireless Internet - Refer to Section 10.6.3
- Public Information System (Future development) – includes wireless information transfer of real time schedule information through electronic signage and information portals, GUI (graphic user interface) to access mapping and real time schedule data and touch screen technology and non-language based self-directed graphic navigation.

Refer to Section 10.6 for other amenities to be provided in addition to the above ETS branding requirements.

10.8 STATION ELECTRICAL

The Consultant is directed to Chapter 11, Electrical Systems, for the design guidelines pertaining to the station electrical system. The chapter presents guidelines for a number of components including:

- Electrical systems requirements
- Lighting
- Emergency power

10.9 STATION MECHANICAL

The Consultant is directed to Chapter 12, Mechanical Systems, for the design guidelines pertaining to the station mechanical systems and components. This chapter addresses the following station related items:

- Plumbing
- Plumbing Fixtures
- Water Service
- Freeze Protection
- Heating and Ventilation
- Grating and Miscellaneous metals
- Fire protection (Siamese, wet, dry)

10.10 COMMUNICATIONS

- For design guidelines pertaining to the communications systems requirements for a LRT station the consultant is directed to Chapter 8, Communications and Control.

There are a number of different phone systems that are installed in a station. Guidelines for the various systems are provided in Section 8.15 of the Communications and Control chapter. Several of these systems, Right-of-Way (refer to Figure 8.2), Emergency (refer to Figure 8.3), Information (refer to Figure 10.9), and Pay Phones are all located on the platform or in other public areas of the station.

All phones available for use by the public must meet the requirements of the Alberta Barrier-Free Design Guide (also refer to Chapter 15, Accessibility, Sections 15.3.3.5 and 15.3.3.6)

10.11 MATERIALS AND FINISHES

This section presents the guidelines and criteria for the materials and finishes that are used in the construction of stations, their related components and elements and ancillary facilities.

Material selection and finish design objectives are stated along with the expected performance standards. The guidelines for each of the material types presented herein; i.e. concrete,

masonry, wood and plastic and related finishes, are based on past experience derived from previous LRT construction in Edmonton.

The quality and character of materials used and final finishes provided in the station construction directly affects the image and long term maintenance requirements of each facility. Simple, durable materials in small manageable sizes, with long-standing availability, installed to facilitate easy replacement, can diminish the impact of damage and maintenance while balancing the character and visual quality of each station.

When specifying manufactured items or materials, preference should be given to standard off-the-shelf items available from more than one supplier, over custom-made or single-source items.

As poorly maintained property is more prone to vandalism, material selection should be based on minimizing repair time so that stations never appear to be under-used or unattended.

When specifying finish, size, colour, pattern or composition, slight variations in appearance should be allowed so less costly products or materials of equal quality can be utilized.

10.11.1 Design Objectives

The following objectives are provided to assist the Consultant in achieving the basic principles previously stated for LRT station design.

Quality Objectives

- Maximize aesthetic and civic quality, safety and transit patron comfort.

Maintenance Objectives

- Maximize the ease of construction and potential replacement and renovation.
- Maximize the use of durable and readily available materials and finishes.
- Minimize the number of components and sizes.
- Minimize life cycle costs.

Performance Standards

- Durability – durable and cost-effective materials should be used that have consistent wear, strength, and weathering qualities. Materials should be capable of maintaining a good appearance throughout their useful life and must be colourfast.
- Low Maintenance – life cycle maintenance costs should be considered in the evaluation of all materials and finishes.
- Quality of Appearance – materials should be appealing and harmonious in appearance and texture. They should reinforce system continuity while still relating to the local context.
- Cleaning – materials that do not soil nor stain easily must be used and have surfaces that are easily cleaned in a single operation. Minor soiling should not be apparent. Commonly used equipment and cleaning agents should be able to be utilized. All porous finishes subject to public contact shall be treated or finished in a manner that allows easy removal of “casual vandalism.”
- Repair or Replacement – to reduce inventory and maintenance costs, materials should be standardized as much as possible for easy repair or replacement without undue cost or disruption of LRT operations. For example, hose bibs, electrical outlets, lighting fixtures and lamps glass or plastic lights, information panels, signs shelter materials, etc., should be standardized on commonly available sizes and finishes for easy inventory stocking and installation.
- Non-slip – entrances, stairways, platforms, platform edge strips, and areas around equipment must exhibit high non-slip properties. Floor finishes must be non-slip even

when wet. This is particularly important at stairs, elevators, and other areas near station entrances including platform areas.

- Corrosion Resistance – because of moisture and the electrical currents involved in LRT operations, special consideration must be given to prevention of corrosion. Non-corrosive metals should be utilized when possible or required.
- Grounding – elements deemed to be an electrical hazard must be grounded.
- Compatibility – selected materials should be compatible with the Edmonton area climate and consistent with existing materials within the station vicinity. Materials for structures should harmonize with existing facilities on a site-specific basis.
- Availability – selection of materials should permit competitive bidding and emphasize regional products and processes over those not available locally.
- Fire resistance – "flame spread" ratings must conform to the National and Alberta Building Codes.
- Finish Materials – dense, hard, nonporous materials should be used in all applications. Finish materials should be corrosion, acid, and alkali resistant and must be compatible with chemical compounds required for maintenance.
- Detailing – detailing of finishes should avoid unnecessary surfaces which may collect dirt and complicate cleaning. Wall surfaces must be vertical and flush allowing for texture. All edge and finish materials should be detailed, incorporating joints and textures that reduce the requirements for true, visually perfect installation over long distances.
- Waterproofing – all finish materials in underground spaces as well as those areas exposed to rain or snow, must be selected and detailed with proper attention to waterproofing, cavity walls, drainage, and venting. All drainage cavities should have cleanout provisions.
- Texture – materials within reach of passengers should be easily cleaned, with a finish to prevent or conceal scratching, soiling, and minor damage.
- Graffiti – graffiti proofing products should be used to protect surfaces susceptible to graffiti.

10.11.2 Basic Materials

10.11.2.1 Poured-in-Place Reinforced Concrete

- For all major structural elements the consultant should specify concrete compressive strengths to a minimum of 30 Mpa at 28 days.
- The use of sulfate resistant cement at each structure location should be investigated and specified as recommended in the results reported by the geotechnical consultant retained for the project.
- As a general rule the use of fly-ash as a cement replacement will not be permitted unless specifically called for by the consultant and approved by the ETS. Fly-ash, as an additive to the mix, may be permitted in certain conditions of high sulfate content and hydrostatic head.
- LRT structures are frequently constructed in locations subjected to extremes of temperature, where moisture and compounds applied as de-icing agents or leached from the soil. These conditions are conducive to an early deterioration of the concrete. To minimize the problem attention should be given to detailing the reinforcing to achieve adequate cover and to minimize crack formation. Nominal pre-stressing should also be considered in order to minimize crack formation.
- Control joints or saw cuts must be specified for poured-in-place platforms, slabs, exterior walls and grade beams.
- Wherever concrete surfaces are exposed to salt or chloride the reinforcing layer near the exposed surface must be epoxy coated. When using epoxy coated reinforcing, the consultant must ensure that quality of concrete and adequate coverage of the reinforcing is maintained/specified.

- Exposed concrete floor surfaces not exposed to public pedestrian traffic should be steel trowelled. Platforms and other pedestrian traffic areas with exposed concrete should be broom finished.
- All concrete surfaces should be sealed to prevent dusting. Concrete sealers must be carefully chosen to reflect the service condition. Certain sealers used in floor joints are susceptible to damage by cleaning machinery. Other sealers to vertical joints are susceptible to removal by vandals and should, if possible, be concealed by cover strips.
- Concrete sealers used on platforms should be a two-part acrylic or water based densifier and finish product. The preferred product must be confirmed with Facility Maintenance Services prior to application.
- Exposed concrete floors in service, and equipment rooms, hallways and common areas should have a non-metallic, abrasion resistant floor hardener finish.
- Concrete testing will be carried out by an independent testing agency retained by the City.

10.11.2.2 Pre-cast Concrete

- Pre-cast concrete components are not recommended for interior architectural finishes, because of size and weight, and the difficulty involved in the replacement of components.
- Minimum 28 day concrete compressive strength for precast elements must be not less than 35 MPA.
- Pre-cast concrete must be erected in accordance with clearly defined standards set out by the consultant responsible for the work.
- Pre-cast concrete components are only to be manufactured by a company with CSA-A25 certification.
- As a minimum, the Consultant should specify the following:
    - cement, aggregate reinforcing or any materials incorporated into the pre-cast elements
    - the class of finish required
    - direct the successful subcontractor to present samples of the designed pre-cast component
    - dimensional tolerances clearly shown in the details
    - responsibility for all caulking, sealing, grouting, and other associated operations

10.11.2.3 Masonry

- Concrete block is preferred as the wall construction within service areas and rooms. If cost justified, Spectra Glaze block can be considered as an alternate to tile in public areas.
- All masonry wall construction around heated service rooms must be cavity insulated.
- The responsibility for masonry cleaning must be clearly specified.
- Through-the-wall exterior masonry units must not be used.
- Through-the-wall and weep flashings must be used to intercept and guide moisture to the exterior.
- The Consultant must pay particular attention to flashing requirements. The objective is to eliminate staining due to water flowing from windowsills or other horizontal components.
- The construction details of walls required as fire separations must be completely detailed on the design drawings including gap closure details at wall perimeters and wall to ceiling junctions.
- Expansion and construction joints must be incorporated in masonry wall construction in accordance with standard practice.
- The Consultant must ensure that compressor and other noise generating rooms are adequately soundproofed.
- The same manufacturer's brands and sources of mortar materials should be used for entire project in order to maintain uniformity of mix and colouration.

- Galvanized reinforcing and anchoring must be used in conventional masonry wall construction. Normally reinforcing for lintels, bond beams filled with concrete would not be galvanized.
- The use of standard unit masonry components is encouraged.

10.11.2.4 Metals

- Rugged methods of fastening such as heavy-duty Hilti type anchorages, rather than concealment, should be used when architectural elements anchorage and bolting are subject to rough usage and vandalism.
- Galvanized metals should be used where the metals are exposed to the elements or to water.
- Stainless steel or other like materials should be used in areas where there is public access. Some examples are washrooms and walls in elevators and exterior handrails.
- The Consultant must, by specification, confirm with the Canadian Welding Bureau (C.W.B.) that all fabricators have C.W.B. certification.

10.11.2.5 Wood

- The allowable moisture content, stress grades, species, and grading of all lumbers must be specified.
- Wood must not be used in unprotected exterior areas or areas subject to exposure to wet conditions.
- Commonly available stock items should be used to the greatest degree possible.
- Requirements for special exposed and concealed fixing devices and their arrangement must be clearly detailed and specified.
- The re-use of salvaged framing materials is not encouraged. This should be specified.
- The placement of wood or wood glulam structural support members that is reachable by the public should be avoided.

10.11.2.6 Architectural Wood work (including Millwork)

- Architectural woodwork finishes should be low maintenance.

10.11.2.7 Plastics

- Laminated plastics can be used in high maintenance areas such as washrooms and elevators. Its use in exterior, wet, and areas prone to vandalism however, will be discretionary.
- Waterproof adhesives must be used in all locations.

10.11.2.8 Expansion Control

- Surfaces of expansion joints exposed to pedestrian traffic must be provided with a non-slip finish. Review and approval of the design by ETS is required.

10.11.3 Colour

Material colours should be in harmony with the surrounding area. Colour selection should favor materials that are light and reflective to assist in maintaining desired illumination levels. They should however, be of sufficient contrast and accent to provide visual interest, and warmth and still be able to conceal minor soiling.

The use of paint, stains, and coatings should be minimized.

10.11.4 Finishes

In general, all finishes are required to meet the performance standards stated in Section 10.11.1.

For Type I stations, all architecturally finished systems must be accessible from the rear for ease of maintenance.

10.11.4.1 Floor Finishes

General

Platform floor finish general guidelines are outlined in Section 10.4.1.6.

Flooring should be easy to maintain, age resistant, acid proof, shock resistant, slip resistant, and able to handle high traffic loads. Slip resistance must be confirmed by field-testing a sample panel of the tiling prior to its use being confirmed. This panel will become a reference for acceptance of the tiles used in the installation.

Acceptable finishes or finish products for all floor areas in and immediately adjacent to all station types are presented in the following table:

Area	Acceptable
Platform	• Concrete with light to medium broomed finish • Quarry Tile • Ceramic Tile (colour through non-glazed)
Public Corridors and Passageways	• Concrete with broomed finish • Quarry Tile • Ceramic Tile • Specialized coloured non-slip coating
Ramps - Interior - Exterior	• As per Corridors/Passageways • Concrete with broomed finish • Paver Stones
Stairways *Interior / Covered Exterior **Uncovered Exterior	 • Concrete with broomed finish • Quarry Tile • Ceramic Tile • Concrete with broomed finish
Elevators	• Resilient (Rubber – based) Preferred • Quarry or Ceramic Tile
Washrooms	• Ceramic Tile is preferred
Service Rooms	• Concrete with light broomed finish
Non-Public Circulation Areas	• Concrete with light broomed finish
Office – Type	• To be determined by the consultant (Interior Designer)

Notes:
* Non-slip, unglazed ribbed nosing tiles must be used.
** Where tile is used on exterior stairs, non-slip, ribbed nosing and textured unglazed tiles for treads must be used.

The following finish surfaces are not acceptable:

- Terrazzo – has a tendency to crack, notwithstanding the provision of control joints, and has a very slippery surface especially when it is wet or snow is tracked on to it.
- Slate
- Colour glazed ceramic
- Rubber or pure vinyl tile

- Cushion back or sheet vinyl

Expansion Joints

- Tile expansion joints should be placed at junctions with walls and columns, etc. and coincide with structural joints.
- Purpose-made expansion joints should be used and be set flush with the finish flooring.
- Flooring materials should not be installed over expansion joints.
- The Consultant must ensure that proper control and expansion joint be incorporated in ceramic / quarry tile flooring. Expansion joints must be full depth of concrete topping and spaced at maximum of 3600 mm centers.

Resilient Flooring

Acceptable resilient flooring material must have the following features:

- Provide a minimum thickness of 2.5 mm
- It must have a non-slip surface when used on ramps
- Is of a non-combustible material

Fire resistant and waterproof adhesives should be used throughout.

Access Flooring

The use and type of access flooring in special rooms or areas must be reviewed with ETS early in the design phase and prior to specification development.

10.11.4.2 Wall Systems

General

Entrance wall systems should be designed to be easily maintained and vandal resistant.

Gypsum or cement wallboard must not be used in the following areas:

- Exterior
- Subject to water or moisture penetration
- Prone to vandalism
- Equipment and maintenance rooms below 2400mm from finished floor

Lath and plaster systems must not be used anywhere in LRT stations or ancillary buildings.

Moisture-resistant gypsum board must be specified when forming back-up for ceramic or mosaic tiles, or as liner wall to the main structure where moisture may be present.

Access panels through gypsum wallboard systems must be designed with metal edged tamper-proof manufactured stock frames and covers made especially to accommodate wall systems.

Walls in non-public areas must be extended to the full length and height of the structure to avoid unauthorized access over a tiled ceiling system.

Wall Tiles

Ceramic or mosaic wall tiles are the preferred finish in all public areas subject to the following considerations:

- Their use can be economically justified
- Located in areas not subject to extreme temperature change
- Must be glazed for easy maintenance

Adequate expansion joints must be provided in all wall tile areas.

10.11.4.3 Suspended Ceiling Finishes

The following requirements must be considered in the design of suspended ceiling systems:

- Are located a minimum 2750 mm above stairs, landings, or floor areas in public areas.
- The area above ceiling surfaces must be accessible.
- Must consider the use of appropriate clips or mechanical fasteners in order to resist displacement by air pressure differentials caused by train movements and stack effects.
- Should be impact, damage and vandal-resistant.
- Should be able to resist damage by water or moisture penetration.
- Should not be installed in service rooms or areas.
- Mineral or ceramic base lay-in ceiling tiles and suspended “T” bar ceilings should be avoided in public areas.
- Avoid sprayed finishes.

Acoustical Treatment

The station design consultant must coordinate with the PA systems consultant to ensure that proper acoustical materials are specified with the objective of achieving maximum effectiveness of the public address system speakers in all station areas (refer to Chapter 8, Communications and Control Section 8.14).

In addition, non-combustible acoustical treatment must be used in platform area ceiling spaces when this treatment is deemed to be a necessary requirement.

10.11.4.4 Painting

For all interior and *exterior areas to be painted, as specified below, the type of paint and number of coats to be applied will be reviewed with ETS early in the design phase and prior to specification development.

The only acceptable paint materials are those listed in the Canadian Painting Contractors Association Specification Manual.

The following areas/elements will be painted:

- Specialty coatings and finishes should be considered for public areas, if not tiled.
- Service, equipment and machine room walls should be painted a light colour. Floors to be painted as well. Painting is required for dust control.
- All doors - doors in public areas should have semi or *high gloss finish.

***Note:** A high gloss finish can expose surface imperfections.

- Exposed conduits, pipes and other mechanical and electrical equipment. All mechanical and electrical, piping, ductwork and conduit must be identified, marked with symbols, and colour-coded.
- *Handrails, fencing, exterior architectural metals.
- As a general rule, the surfaces of all materials.

  *Note: Exterior handrails should be stainless steel or galvanized. Painted exterior handrails require repainting on an annual basis.

10.11.5 Specialties

This section lists a variety of specialty elements that are generally provided in LRT stations. A number of the elements that were listed in this category in the previous edition of the LRT Design Guidelines are now addressed in other sections of this chapter (refer to references).

General

- Access doors, opening front panels and the like, must be secure from vandalism when closed and be designed to remain in the open position for maintenance purposes.
- Front panels and cabinet assemblies generally should be rigid and free from rattles or loose seals and easily accessible for maintenance.
- All suspended units must be firmly secured and braced and if possible, be locate above normal reach.
- Exterior units must be weather tight.

Louvers and Vents

- The use of architectural aluminum or steel louvers in public areas should be encouraged.
- All louvers and vents must be firmly anchored into mounting frames to prevent vandalism and interference.

Stainless Steel Components

- Stainless steel alloys for architectural components and hardware must be of grade SAE 316 (L) or better.
- For interior use where there is minimal contact with moisture or chlorides, a 180-Grit finish or better must be used.
- For exterior use where there will be exposure to moisture or possible exposure to chlorides, a 280-Grit finish or better must be used.

Elements Addressed Elsewhere

- Clock Tower (refer to Section 10.7)
- Plastic Laminate Toilet Partition (refer to Section 10.11.2.7)
- Access Flooring (refer to Section 10.11.4.1)

10.11.6 Doors and Windows

10.11.6.1 Doors

General

All doors must be of heavy-duty construction to handle extremely heavy traffic use and must be reinforced for mortise locks.

The use of aluminum doors and frames under high load situations should be avoided as they have a tendency to twist (hinge screws do not hold) and perform poorly in high traffic and windy areas.

Mineral core doors, hollow core wood doors, or solid core wood doors must not be used.

Doors must be provided at street level at all Type I and II station entrances.

Doors should have the following characteristics:

- Frames around glass doors should be of heavy steel construction
- Must be latch-able to counteract door movement due to air pressure differentials caused by train movement in underground stations. This will generally require that the door closes against (or to) a mullion.
- Exterior doors should not rely on the closure motion to keep them closed if the panic hardware is clogged open.
- Single action doors only should be used.
- Fully glazed doors should not be used without a horizontal 200 mm wide cross bar at 900 mm height to physically divide the glass area into smaller panes
- Fixed or removable mullions should be provided wherever possible where pairs or multiples of doors are required. (This condition may not be applicable to high occupancy, special service room requirements or other areas where the use of mullions is restricted

by the building code). Where applicable, mullion dimensions must be adequate to allow for the mounting of any required electrified control devices.

- All doors equipped with electrified security devices I.e. electric strike, door contact, sensor must be operated at 12 vdc only.
- All exterior doors must be equipped with remote locking with the default position locked when not powered.
- All doors should have stainless steel kick plates.
- All exterior doors must be fitted with heavy duty stainless steel continuous hinges (i.e. piano hinges) to maximize life and wear resistance.
- In areas where wind loads on exterior doors may be substantial, consideration should be given to limiting the door height to seven (7) feet.
- Labeled doors will be hollow metal.

The use of special doors must be reviewed and approved by ETS early in the design phase and prior to specification development.

Card Access System (C-Cure)

Public access and service room doors as designated by the City are to be fitted with conduit, wire and hardware as per City requirements for connection to card readers that are supplied and installed by the City. A board is to be installed by the Contractor in the Communication room to accommodate the wiring and control devices that are required for the system. Refer to Chapter 8 Communications and Control Section 8.19.1 Security System.

Standard Steel Doors

- Interior doors must be a minimum of 45 mm thick, 900 x 2100 mm commercial grade flush and seamless.
- Exterior doors must be a minimum of 45 mm thick, 900 x 2100 mm thermally insulated commercial grade flush and seamless.
- A minimum 100 mm stile should be used where glazing occurs.
- Steel doors with welded frames must be used for all door openings except where allowed for in aluminum doors and frames as discussed below.
- Must meet fire code provisions.

Standard Steel Frames

Pressed steel door frames must be used throughout. The use of knock down frames are not permitted.

The Consultant must also specify the following:

- Large openings are to be equipped with a structural sub-frame to provide rigidity.
- Welded joints are acceptable
- Door mutes are to be provided.
- Use thermal-broken frames at exterior door openings.
- Provide positive weather-stripping at exterior openings.
- Detailing should encourage the use of locally manufactured door frames from standard shape components.

Aluminum Doors and Frames

As indicated above, if aluminum doors and frames are to be used it should only be in low traffic and ancillary areas and only when authorized by ETS. They must meet the following criteria:

- Doors will be 45 mm thick, 900 x 2100 commercial series designed for heavy commercial use.
- Provide a minimum 100 mm stile

- Have steel backing for all hardware and corners
- Electro-chemically coloured aluminum components must have Aluminum Association Class I anodonic coatings.
- Use thermally broken frames and positive weather-stripping at exterior openings.

Mill finish aluminum must not be used.

10.11.6.2 Automatic Doors

The location and types of automatic doors that are to be installed will be determined by ETS early in the design phase.

Sliding Door

The general requirements for automatic sliding doors are as follows:

- Must be able to operate between –30° C and +45° C.
- Must have a clear anodized aluminum finish
- Provide a full width aluminum threshold at each opening
- Provide directional motion sensors to activate, and an infrared safety beam
- Provide a control system (electronic open, close, lock) for service personnel
- Must not have an emergency breakout to full open position
- Automatic equipment must comply with ANSI A156.19
- Must connect to the main building power supply and UPS system and interface with the BMS and fire alarm systems

Standard of Acceptance Stanley Dura-Glide 2000 Series

Swing Door

The general requirements for automatic swing doors are as follows:

- Must be able to operate between –30°C and +45°C.
- Must have a clear anodized aluminum finish
- Provide a full width aluminum threshold at each opening
- Push button controlled
- Provide directional motion sensors and a infrared safety beam to stop or slow door movements when there is a pedestrian in the path of the door.
- Provide at least a 15 second minimum delay before closing from the open position.
- Automatic equipment must comply with ANSI A156.19
- Must connect to the main building power supply and UPS system and interface with the BMS and fire alarm systems

Standard of Acceptance: Stanley Magic Swing

10.11.6.3 Windows

Aluminum window frames are preferred having the following features:

- Thermal-broken frames should be used at exterior locations.
- A protective rail or mullion must be provided at approximately the 900 mm level where windows extend to within 450 mm of the floor.
- If aluminum window frames are specified, electro-chemically coloured aluminum components must have Aluminum Association Class I anodonic coatings.
- Where special window frames are specified, fully glazed wall sections having decorative glass must be adequately protected.

Mill finish aluminum wood or plastic window frames must not be used.

10.11.6.4 Glazing

The Consultant must review the use and application of glazing options (tempered or laminated safety glass, plexi-glass, curtain walls) with ETS early in the design phase of the project, prior to specification development.

General Requirements

- Tempered float plate glass or wired glass must be used in all public areas.
- Interior glazing will be taped by the dry method.
- Thermally sealed, double glazed windows should be used with protective channel edges.
- Neoprene glazing splines will be used where possible.
- All sealed units must be covered by a non-diminishing minimum ten (10) year warranty against film formation or dust collection on the internal glass surfaces.

Glazed Curtain Walls

Only proven curtain wall systems will be used that can accommodate expansion and contraction without damage to the components structure or it's adverse weather – resistance capability.

- Curtain wall systems should conform to the rain-screen principal.
- Only thermal-broken sections can be used.
- Aluminum finishes must be similar to those required for aluminum doors and windows.

10.11.7 Hardware

The Consultant must review and coordinate all door and related hardware requirements, including, but not limited to locksets, door closers, overhead door holders, door hold openers, stops, panic devices hinges, keying, and lock cylinders with ETS early in the design phase of the project, prior to specification development.

All hardware must be specified as heavy duty and commercial grade.

10.11.7.1 Locksets

Standard mortise locksets must be used which are capable of accepting standard cylinders. Locksets must be coordinated with the existing locking system and confirmed with ETS prior to specification development.

10.11.7.2 Door Closers

- Concealed closures (any type) must not be used unless specifically approved by ETS.
- They should not allow the door to open more than 90°.
- Closures with projecting arms should be avoided as they are prone to vandalism.

Standard of Acceptance: LCN 4041

10.11.7.3 Overhead Door Openers

Acceptable overhead door openers should be used on all entrance doorways and public corridor smoke or fire doors.

10.11.7.4 Door Hold Openers

- Magnetic hold openers must be installed on public corridor smoke or fire doors. Hold openers may also be required in other areas. Each location / condition will be assessed individually by the Consultant and ETS.
- Floor or wall mounted hold open devices are preferred as compared to concealed types or types incorporated into the door closer.
- By code, hold openers must be connected to the fire-alarm system.

- The device must be connected to the BMS for locking and unlocking.

10.11.7.5 Stops

Floor mounted door stops are acceptable for utility room doors. This type should not be installed in areas of high pedestrian traffic flows where they pose a trip hazard, unless there are no other options.

10.11.7.6 Panic Devices

The installation of panic devices on a bank of doors will be governed by code. Only the minimum number of panic devices should be installed. Where a bank of doors needs to be keyed they will be all keyed with the same key.

- Must be the type in which the action is controlled from the interior with a special key.
- Vertical rod panic devices are generally not acceptable. Vertical mullions are preferred in lieu of vertical rod employment. Concealed vertical rods are preferred where panic devices with vertical rods must be used.
- Bolt sockets must be the spring-loaded self-cleaning type.

Standard of Acceptance: Von Duprin Series 9900

10.11.7.7 Hinges

The selection of hinges should be based on the following criteria:

- Durability and the ability to handle high traffic volumes and rough usage.
- Provides a heavy-duty ball bearing mechanism.
- Have provided superior performance on existing LRT facilities.

Standard of Acceptance Stanley, Hugar, Von Duprin

Continuous hinges should be used on exterior entrance doors.

10.11.7.8 Keying

The Consultant's responsibilities with respect to keying are:

- The provision of keyways that is unique to ETS and the City of Edmonton.
- Ensuring the coordination with the ETS General Master Key (GMK) System
- Confirming uniformity with ETS before installation.
- Ensuring that the specifications state that the master keys will not be issued to anyone on the building site.

The Consultant will also ensure that the Contractor provides the following:

- Temporary or construction cylinders to be used during construction.
- Assembles all change keys with numbers corresponding to the appropriate key or keys after the locks and cylinders are installed.

10.11.8 Gates (Type I and II Stations)

Gates are to be installed at both ends of the platform to deter the public from accessing the track level from the platform. Notwithstanding, the public must be able to use the gate to exit the platform in the case of an emergency.

10.11.9 Office Furnishings

Office type furniture, such as desks or chairs may be required for certain service rooms in stations. These requirements will be determined by ETS on an individual station basis.

10.12 THERMAL AND MOISTURE PROTECTION

10.12.1 Type I Roof Structures

A waterproofing membrane must be applied to the outside of the structure. Successful repair of a faulty membrane on an underground structure is very difficult and expensive. Special precautionary measures must be taken to ensure the designed/specified membrane does not develop leaks. They are as follows:

- Research to confirm that the selected membrane has performed satisfactorily on other facilities under similar conditions.
- Prior approval of the design by the membrane manufacturer or licensed representative,
- Written approval by the selected applicator that the roof surface has an acceptable finish for receiving the membrane.
- Installation of the membrane by an applicator approved by the membrane manufacturer.
- Site visits by the manufacturer's representative and an independent supervisor/inspector before and during membrane application. The independent inspector must be *ARCA certified and acceptable to both the Contractor and the Supplier.

***Note:** ARCA – Alberta Roofing Contractors Association

- Protection of the membrane after application with the protection measures being approved by the manufacturer.
- The structural element to which the membrane is applied must be designed to minimize uncontrolled cracking. This may involve breaking the element into small discrete portions separated by expansion joints and/or pre-stressing the element to ensure it is always in compression.
- Metal eavestroughing or similar drainage system should be used at major slab or deck joints where an effective waterproof seal cannot be provided. This is of particular importance where leakage may damage underlying elements.
- Insulation subjected to traffic loads must be able to withstand the fatigue failure, which may be induced by the imposed repetitive loading.
- A minimum five (5) years warranty on materials and installation against leakage or other defects is to be provided by the Contractor.

10.12.2 Type I and Type II Station Walls

For Type I structures where moisture is allowed to penetrate the exterior primary structural envelope and the moisture is intercepted by means of drains, the Consultant should consider a second interior screen / decorative wall some distance removed from the primary wall structure.

Type I structures can have multiple changes in section. This type of configuration is more prone to cracking and movement of the structure leading to a possible early breakdown of the membrane at entranceways.

Readily accessible clean-out openings should be provided as required to permit maintenance of any sub-drainage system associated with the moisture protection system.

Decorative false walls, electrical and mechanical construction at exterior walls must be supported away from the exterior walls or be placed on the inside wall of cavity wall construction. The water should be allowed to seep through exterior walls to a designed drainage system.

10.12.3 Above Grade Structures (Type I Entranceways, Type II and III Roofs)

<u>Non – Metal Roof Structures</u>

The following are the general requirements for membranes installed on non-metal roof structures:

- Ensure the membrane is protected against mechanical damage
- Ensure that the membrane is maintained at a fairly constant temperature throughout the year
- Ensure that the membrane is protected from UV radiation thus slowing the aging process
- Insulation should be R 15 to R 20 minimum (average R value). Avoid the use of soft and fiberglass type insulations.
- Avoid the use of Reglet joints

Metal Roofs

Seamless metal roofs with upstanding vertical joints are acceptable. A five (5) year ARCA Certificate of Assurance Warranty against leakage should be requested. Usually a ten (10 year manufacturer's warranty on materials is provided. A specialist roofing consultant must be retained to design the roof to qualify for the ARCA warranty. A certified ARCA inspector must perform the inspection.

Skylights

- Use polycarbonate skylights wherever practical. Anti-scratch surface treatment should only be used on flat panels.
- Skylights must be designed to have a positive slope to adjacent roof or drains.
- Vandal proof fasteners should be used with pressure plates to clamping glazing in place, avoid the use of exposed caulks and sealants.
- When specifying skylights, the consultant should consider the use of UV inhibitors with the glazing.

10.12.4 Drainage

Numerous references have been made to drainage requirements throughout this chapter. For additional guidelines refer to Chapter 12, Mechanical Systems, Section 12.7.

10.13 ADVERTISING

10.13.1 General

The provision and installation of advertising signage in or adjacent to LRT Stations is generally the responsibility of an Advertising firm under contract to and the direction of ETS.

The station design consultant, in conjunction with ETS, early in the design phase and prior to specification development, will determine the possible locations suitable for advertising based on the criteria presented below. Once the final locations have been selected the Consultant will ensure that design drawings clearly specify anchorage and electrical locations and requirements.

Advertising must meet the following general requirements:

- Does not conflict, by placement or treatment with, or take priority over, system information signage.
- Be carefully located so that it does not obstruct, cause distraction or impede patron movement; or conflict with legibility of emergency exits or equipment.
- Be located so that it does not obstruct CCTV coverage of the facility.
- Be considered as a design element rather than random displays.
- Be compatible as much as possible with the architectural theme/features of the station.
- Preferably, be placed so that a power shutdown of the 600V overhead catenary is not required when installing ad or maintaining the signage fixtures.
- Conform to all applicable codes.

10.13.2 Location Criteria

- Entrances, Concourse, Passageways and Fare Collection Areas

  Station entrances are suitable for advertising as this location is usually free of safety concerns related to trains or vertical circulation. The placement of advertising in the concourse areas must not conflict with fare collection, signage functions, or patron movement patterns.

- Vertical Circulation Spaces (Stairways and Escalators)

  Advertising should not be located at the top and bottom landings of stairs and escalators as their placement could be distracting to the patron.

- Platform Level

  The station platform and across track locations are suitable for advertising provided placement meets the general requirements listed above.

10.13.3 Advertising Panel Frames

- The Advertising vendor will supply the frame for installation by ETS.
- ETS can request that frames be custom-built for a station including the specification of the colour requirements.
- Panel sizes will be decided by ETS in consultation with the Advertising Vendor.
- Frames must conform to the most popular national advertising standards.

10.13.4 Lighting

Existing ambient station lighting should be adequate for most advertising. If lighting is deemed necessary, it should be identified as early as possible in the station preliminary design process in order that the electrical requirements can be determined and specified.

10.13.5 Digital Display

Refer to Section 10.6.3 – Electronic Information Screens

10.13.6 Maintenance and Performance Criteria

All materials used in the fabrication of advertising panels and framework should be durable, vandal-resistant and have low maintenance.

10.13.7 Future Requirements

When directed by ETS, and where practicable, the Consultant will make provision in the design for additional future advertising signage (conduit runs, etc.).

10.14 STREETS DESIGN

The Consultant is directed to Chapter 18, Streets Design, for the design guidelines for street and sidewalk modifications, new street construction, track grade crossings, and parking and vehicular drop-off areas adjacent to the LRT station site.

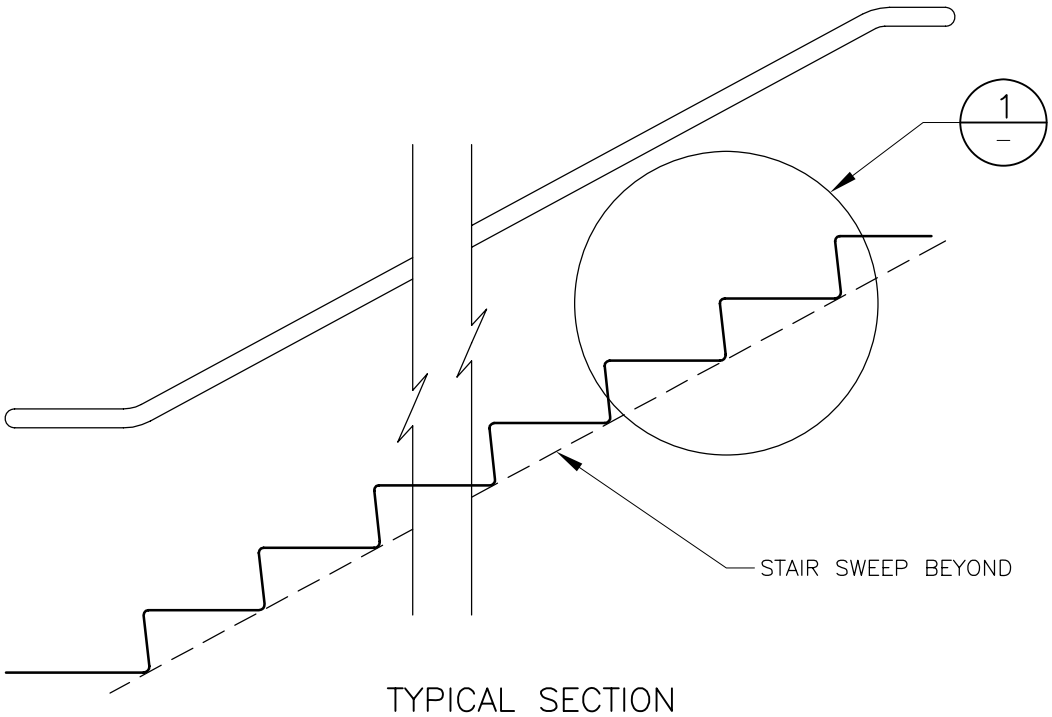

TYPICAL SECTION

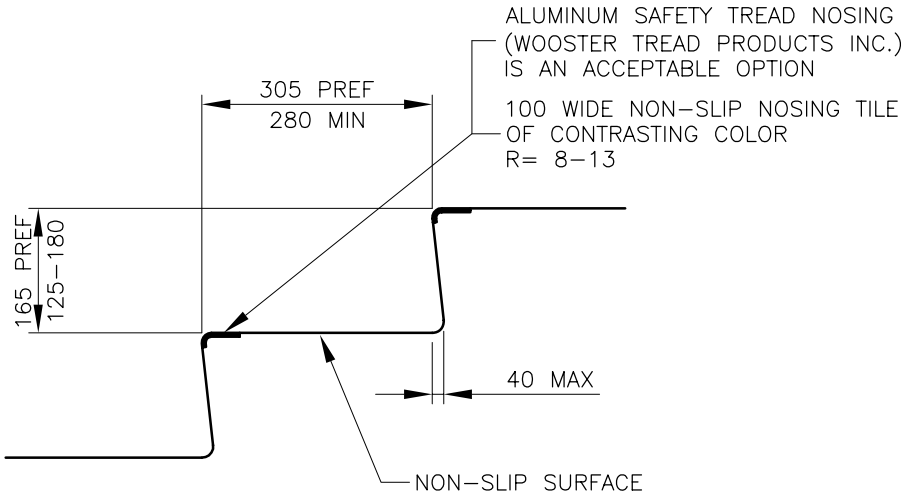

1 – STAIR DETAIL

ALL DIMENSIONS IN mm.

		FIGURE 10.1 STAIR DETAIL	CHAPTER 10 STATIONS AND ANCILLARY FACILITIES
Date	Revision		

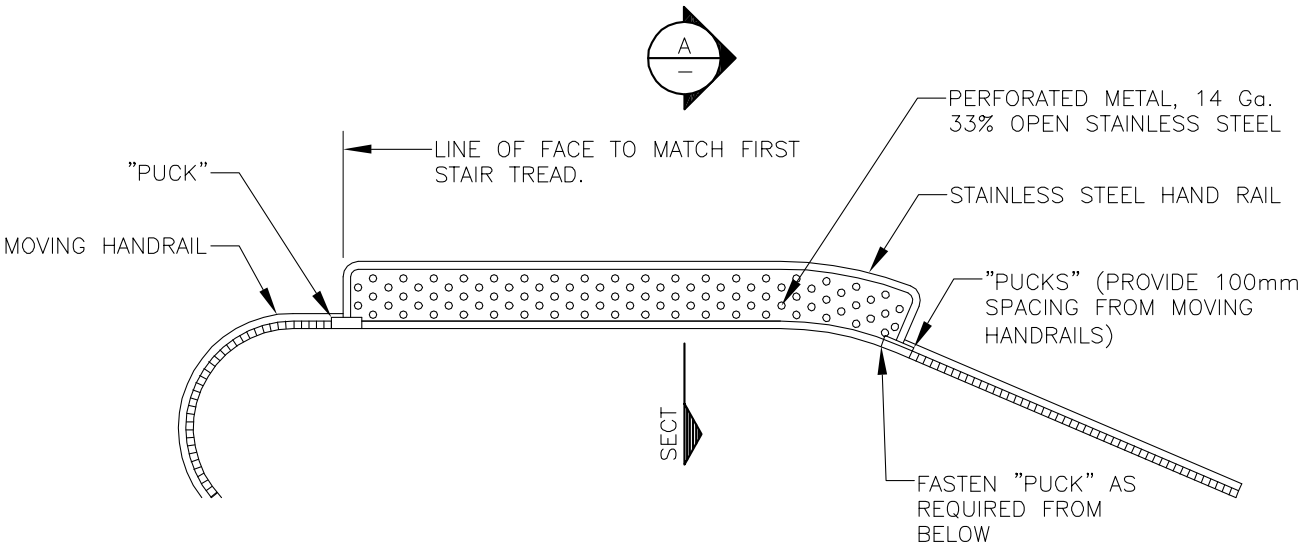

ELEVATION

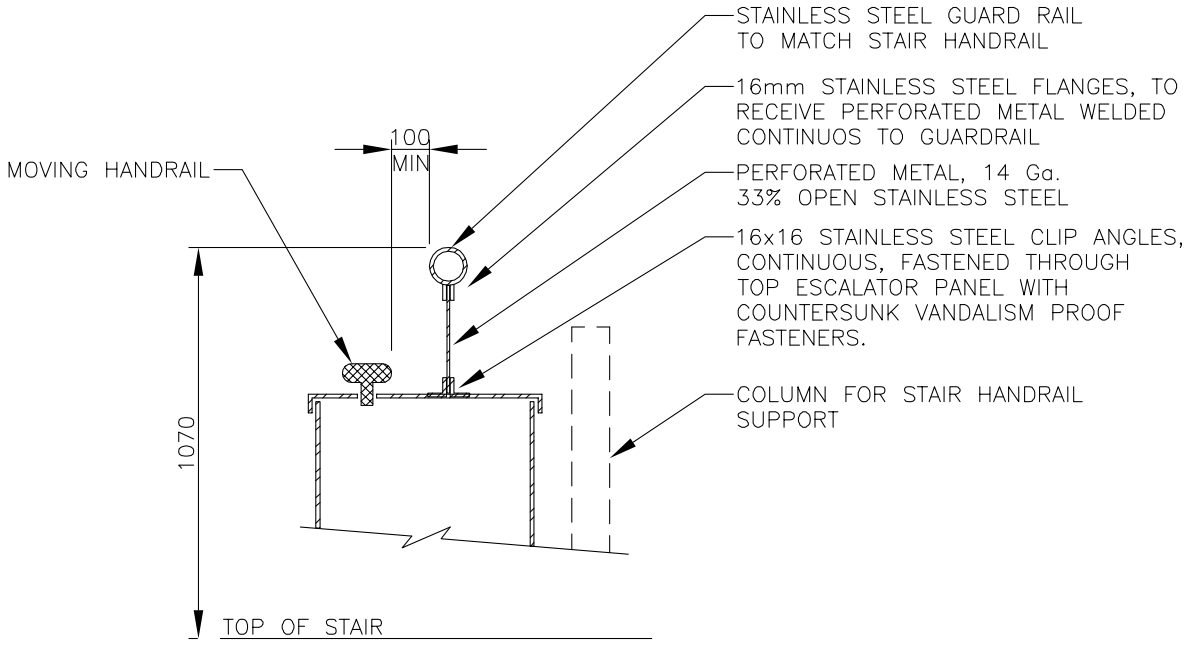

A – SECTION

		FIGURE 10.2 ESCALATOR GUARD	CHAPTER 10 STATIONS AND ANCILLARY FACILITIES
Date	Revision		

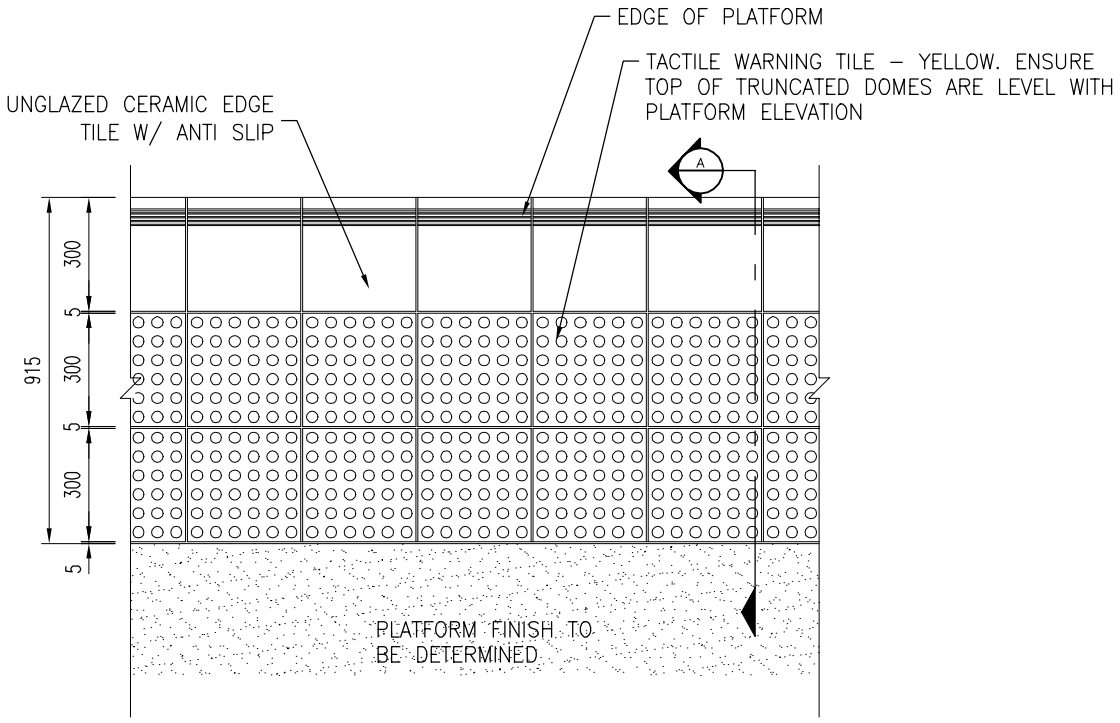

PLAN DETAIL

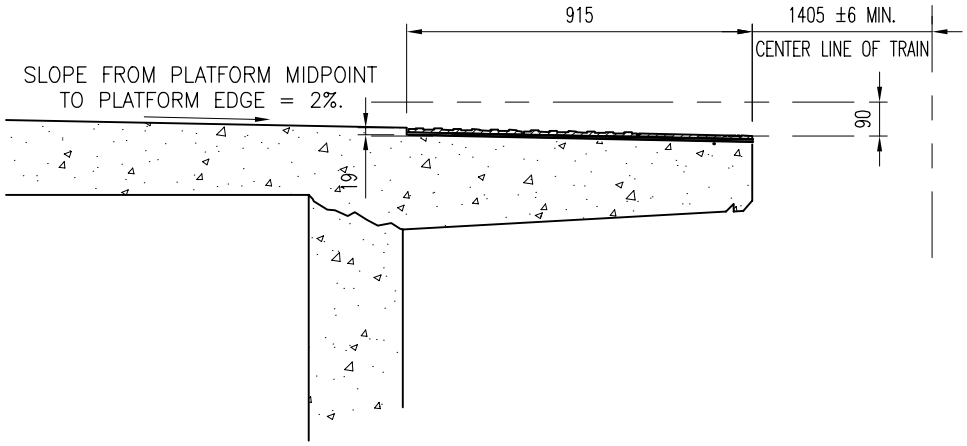

A EDGE DETAIL

		FIGURE 10.3	CHAPTER 10
		PLATFORM TACTILE WARNING STRIP	STATIONS AND
			ANCILLARY FACILITIES
07–JUL–11	TILE REVISION		
Date	Revision		

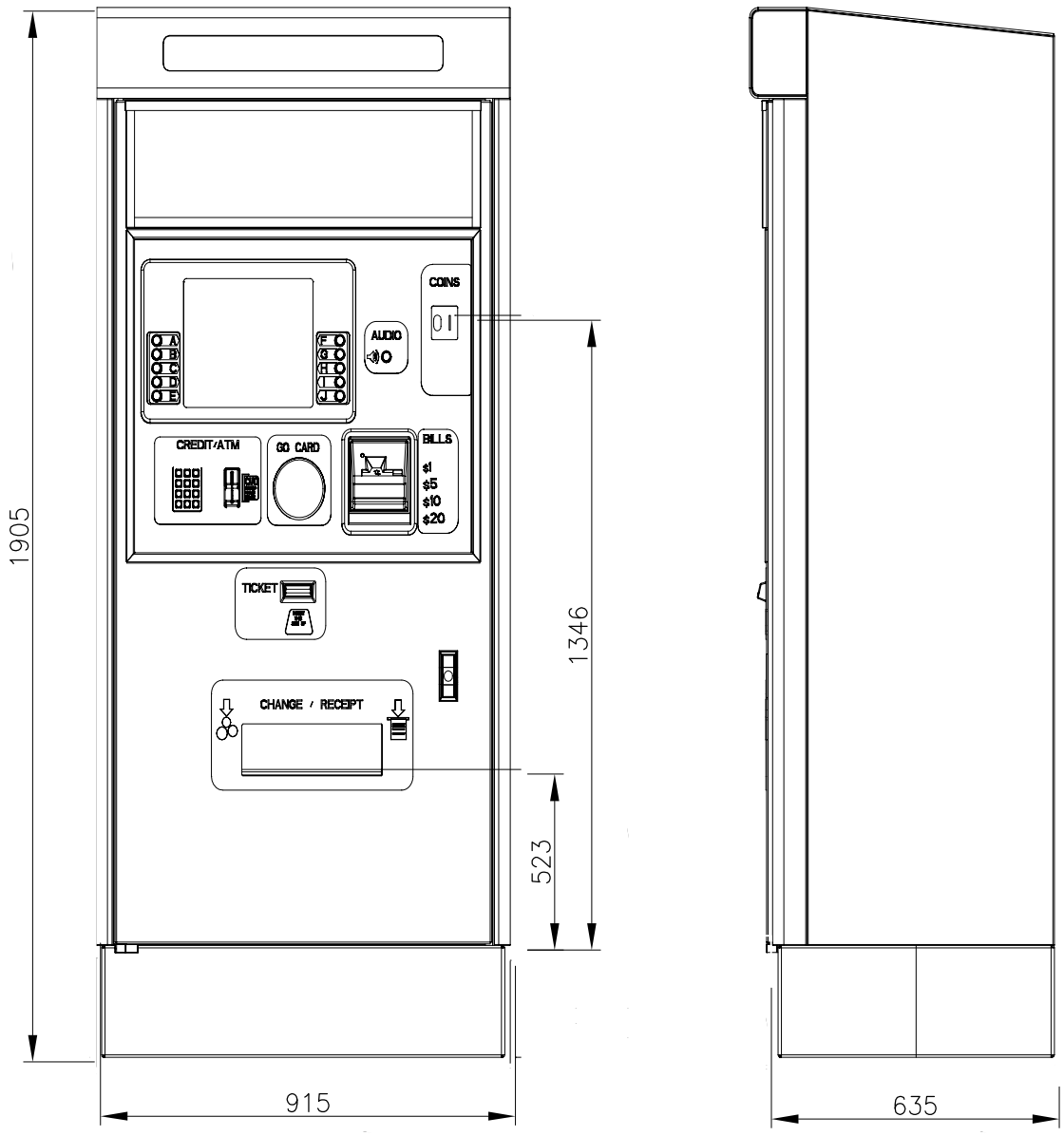

		FIGURE 10.4 TICKET VENDING MACHINE	CHAPTER 10 STATIONS AND ANCILLARY FACILITIES
Date	Revision		

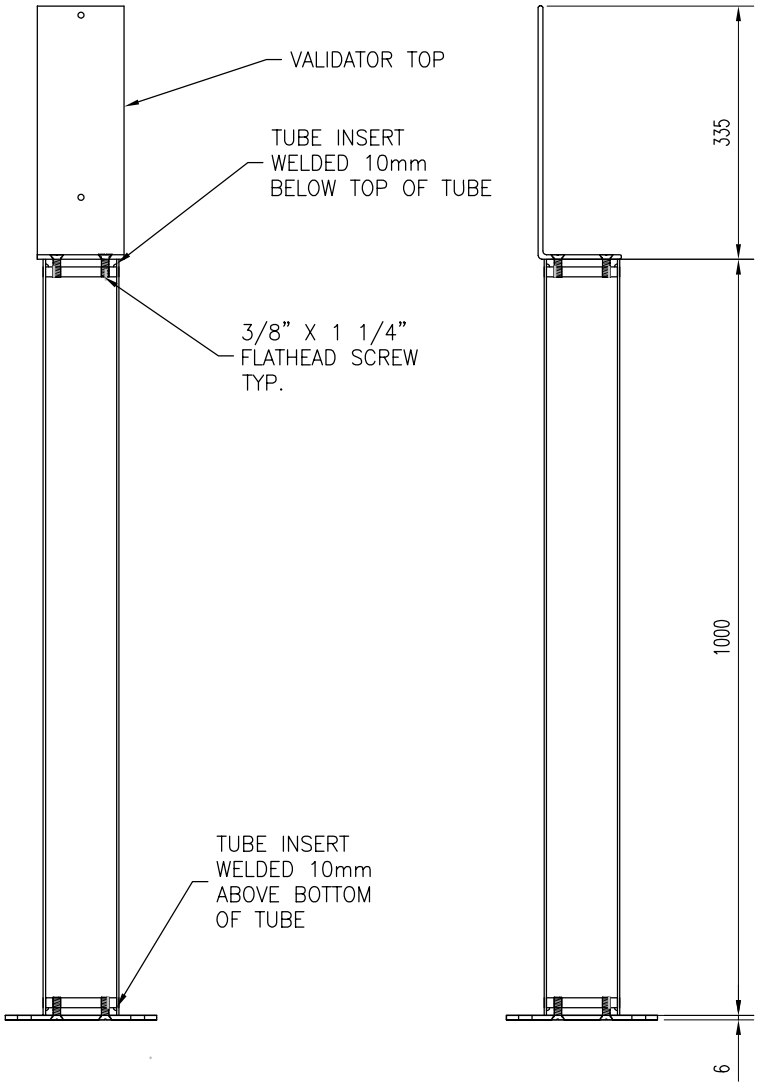

FRONT VIEW

SIDE VIEW

NOTES:

VALIDATOR STAND MATERIAL BRUSHED STAINLESS STEEL

VALIDATOR TO BE SHROUDED IF LOCATED IN AN UNCOVERED PORTION OF THE PLATFORM

		FIGURE 10.5	CHAPTER 10
		FARE VALIDATOR STAND	STATIONS AND
			ANCILLARY FACILITIES
Date	Revision		

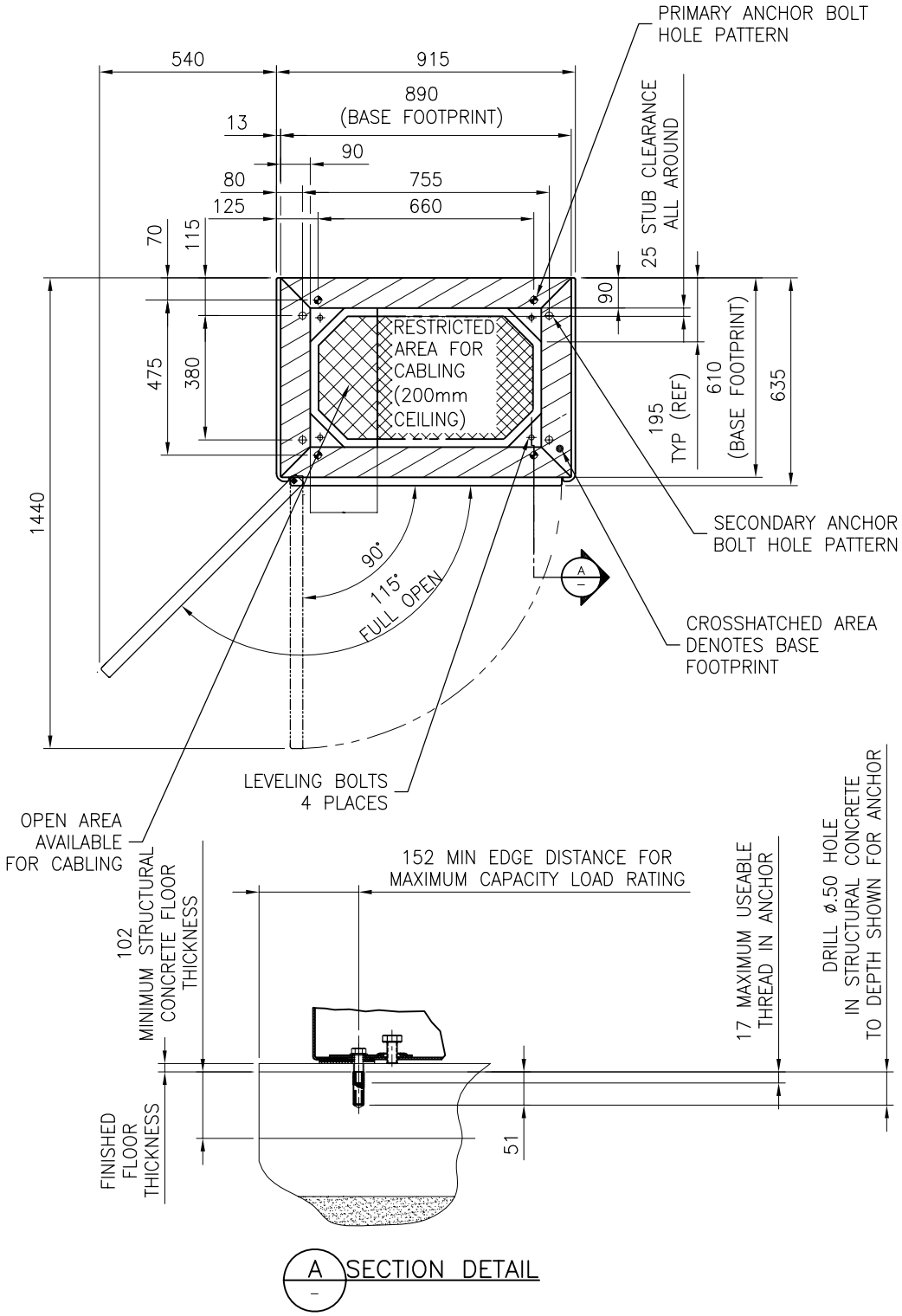

		FIGURE 10.6 TICKET VENDING MACHINE ANCHORING DETAIL	CHAPTER 10 STATIONS AND ANCILLARY FACILITIES
Date	Revision		

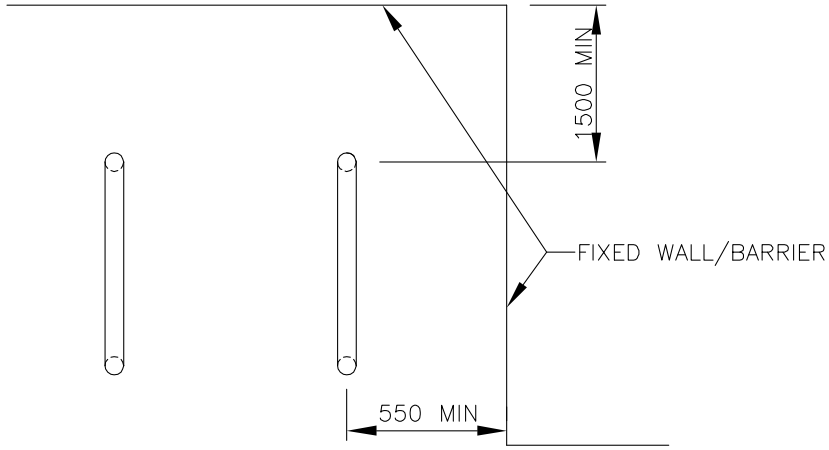

PLAN VIEW

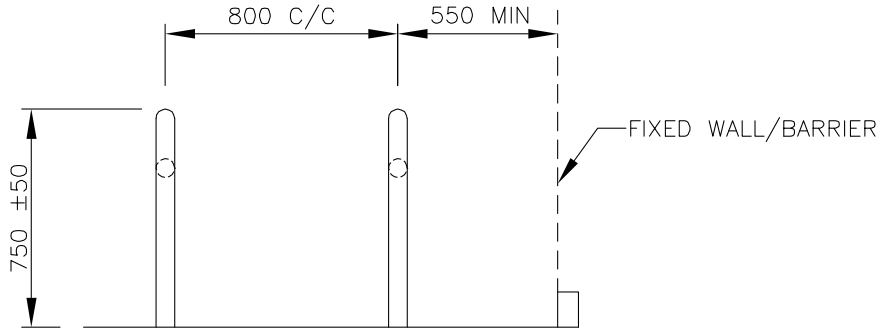

FRONT ELEVATION

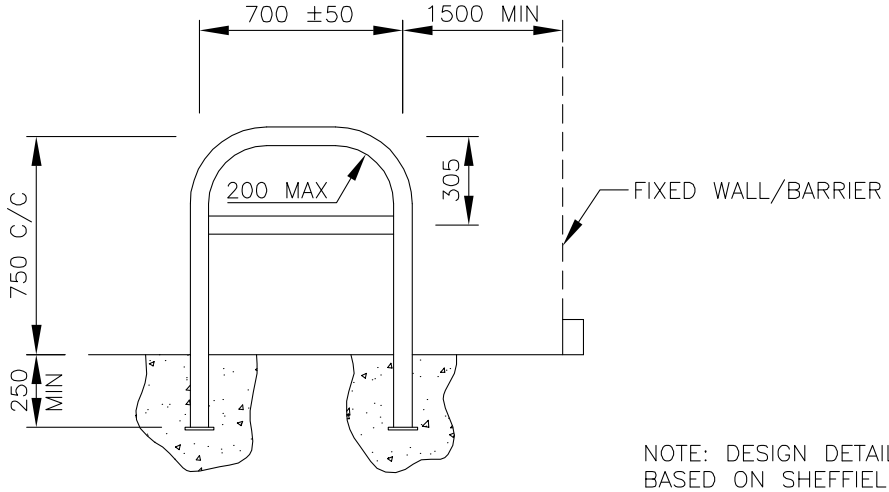

SIDE ELEVATION

NOTE: DESIGN DETAILS BASED ON SHEFFIELD MODEL

		FIGURE 10.7 BIKE STAND	CHAPTER 10 STATIONS AND ANCILLARY FACILITIES
Date	Revision		

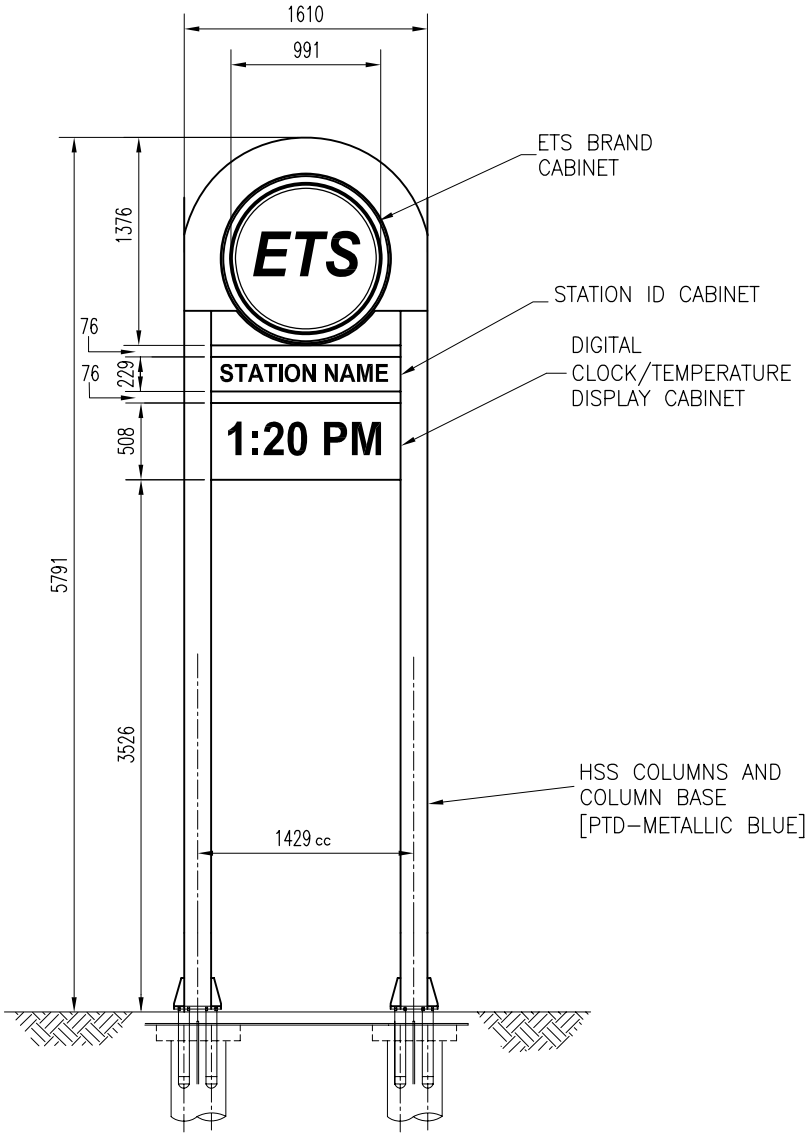

FRONT ELEVATION

NOTES:

TOWER HEIGHT/WIDTH APPLICABLE ONLY WHEN PLACED ON LRT PLATFORMS.

REFER TO ETS VISUAL ID STANDARDS MANUAL FOR CLOCK TOWERS ON TRANSIT CENTRE ISLANDS

REFER TO BLANCHETT NEON SHOP SHOP DRAWINGS DATED FEB. 9, 2007 FOR DETAILS

		FIGURE 10.8	CHAPTER 10
		TYPICAL	STATIONS AND
		STATION CLOCK TOWER	ANCILLARY FACILITIES
Date	Revision		

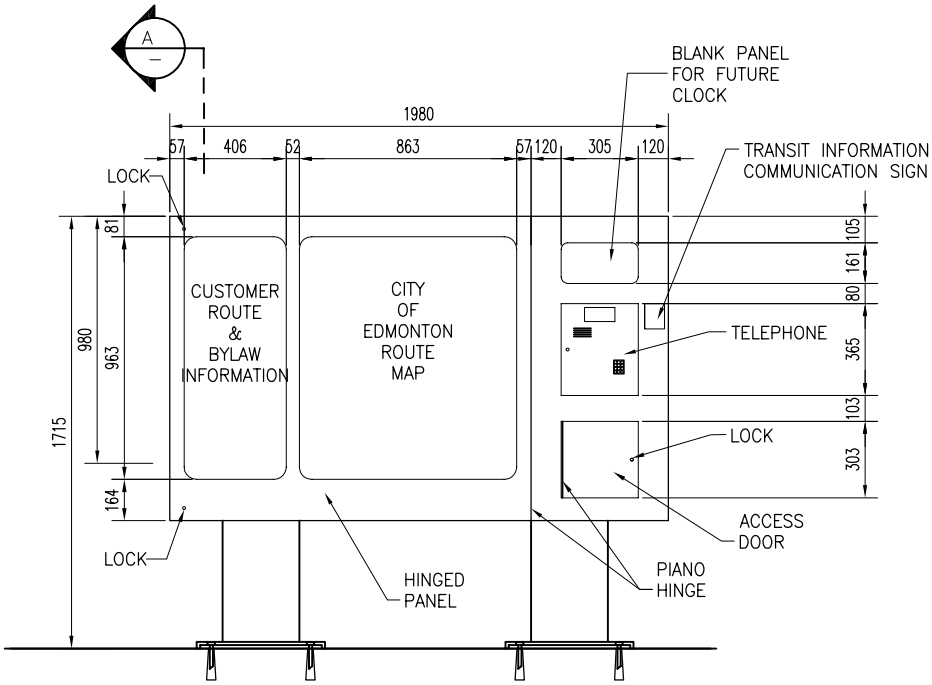

FRONT ELEVATION

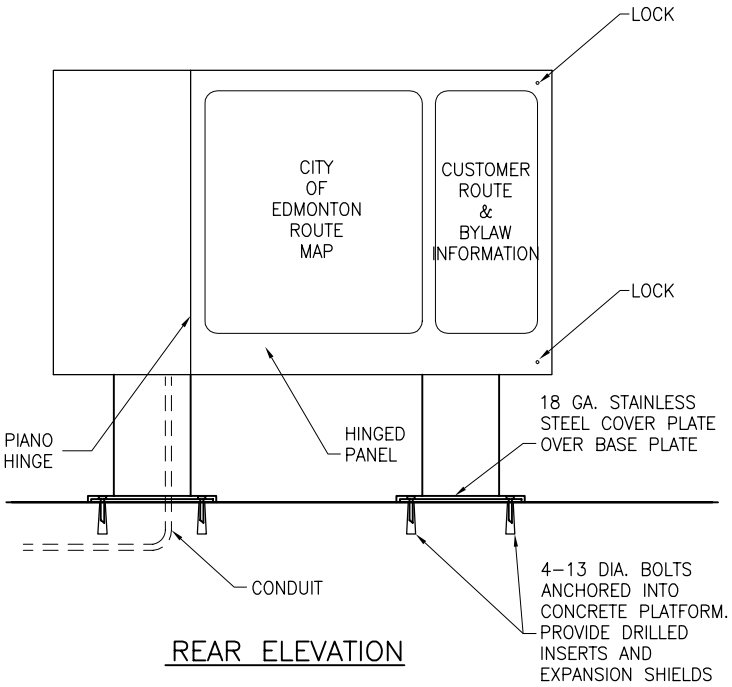

REAR ELEVATION

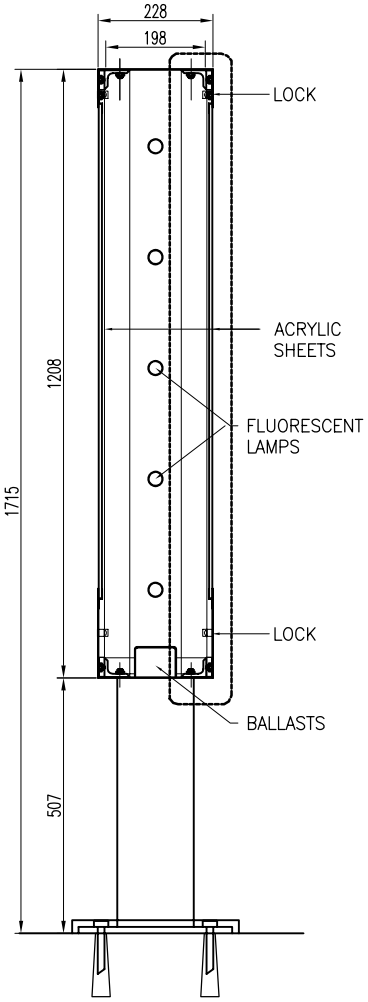

PANEL SECTION

		FIGURE 10.9 TYPICAL INFORMATION PANEL LAYOUT	CHAPTER 10 STATIONS AND ANCILLARY FACILITIES
Date	Revision		

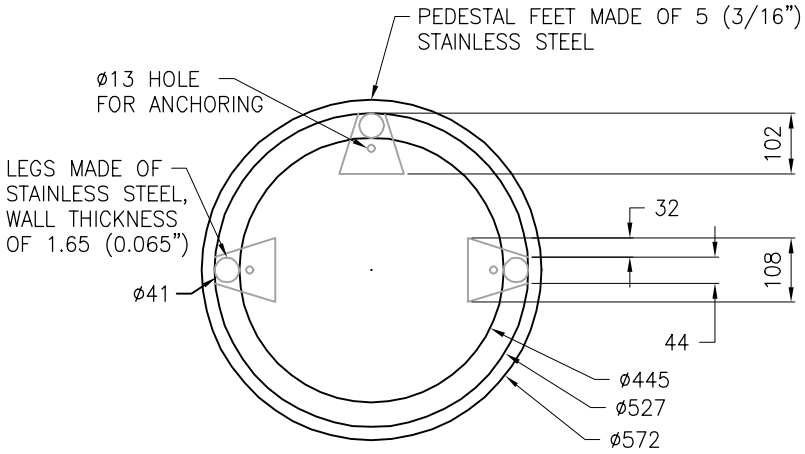

TOP VIEW

NOTE: BOTTOM PAN MUST BE ABLE TO MOVE UP AND DOWN TO GIVE THE ABILITY TO SECURE IN SPOTTED LOCATIONS.

ALL DIMENSIONS SHOWN IN MILLIMETERS UNLESS NOTED OTHERWISE.

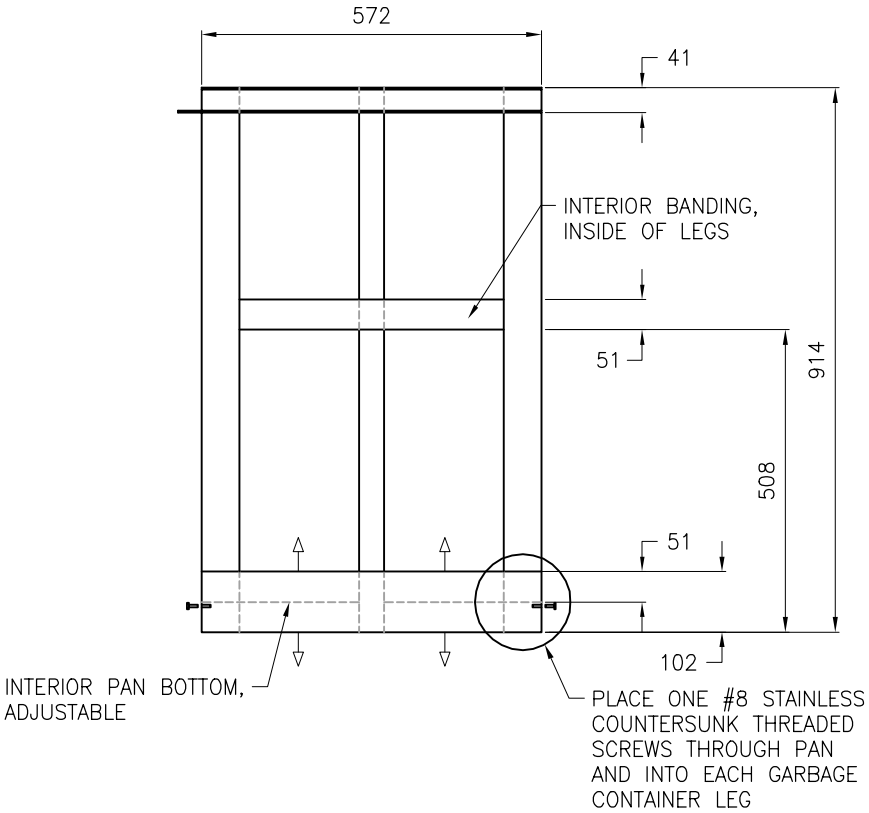

FRONT VIEW

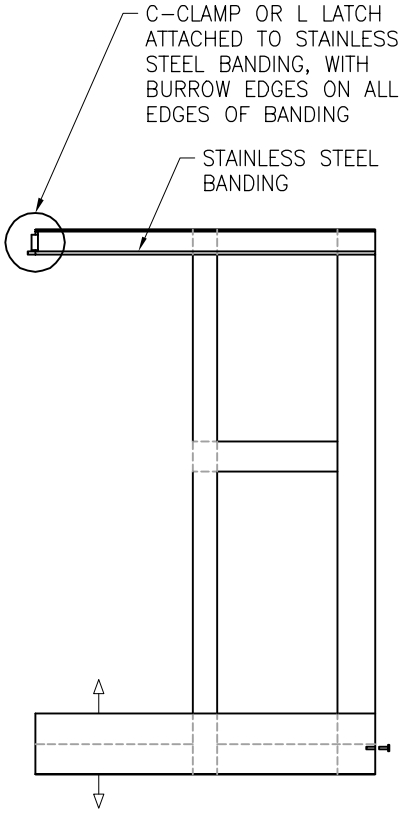

SIDE VIEW

		FIGURE 10.10	CHAPTER 10
		GARBAGE RECEPTACLE	STATIONS AND
			ANCILLARY FACILITIES
4-JUL-11	NEW		
DATE	REVISION		

STATION PLATFORM WIDTHS

The following calculations were made to determine the minimum width of centre load platforms:

- Platform length = 123 m
- 1000 passengers detraining from a 5 car train or two – 5 car trains arriving simultaneously at platform and each detraining 500 passengers.
- Occupancy allowance of 0.743 sq m per person (APTA standard)

Therefore platform area required = 1000 x 0.743 = 743 sq. m

Based on the forgoing, a minimum platform width of 6.0 m is required (743 / 123 = 6.04)

However, this width excludes any allowances for the widths of stairs, escalators, service areas and the safety zone at the edge of the platform. When these allowances were factored in it was determined that a minimum width of 8.19 m was required.

Width remaining = 2150 mm (8190 – 6040)
Safety zone requirements 400 x 2 = 800 mm (as per 1992 edition of Design Guidelines)
Width remaining for stairs, escalators etc = 2150 – 800 = 1350 mm
However 48' escalator = 1220 mm
Stairway (2 units at 550) = 1100 mm

(It appears that 8190 mm not adequate when exiting factored in)

For a side loading platform configuration the minimum width was determined to be 3650 mm

- Platform length = 123 m
- Area req'd = 500 pass. detraining x Occup. Allowance of 0.743 = 371.5 sq. m
- Min. width req'd = 371.5 / 123 = 3.02 m or 3020 mm

When allowances for safety zone, benches etc are added in it was determined that the minimum width required is = 3650 mm (Diff 3650 – 3020 = 630 mm)

EXISTING PLATFORM SIZES

Station	Width	Length
Clareview	9.076 m	123.0 m
Belvedere	7.858 m	121.425 m
Coliseum	7.86 m	123.85 m
Stadium	7.86 m	124.562 m
Churchill	7.86 m	129.0 m
Central	7.86 m	125.3 m
Bay	8.19 m	129.881 m
Corona	8.19 m	123.0 m
Grandin	8.19 m	123.0 m
University	8.19 m	123.0 m
Health Sciences	9.0 m	124 m
McKernan/Belgravia	6.0 m	123 m
South Campus	9.0 m	123 m
Southgate	9.0 m	123 m
Century Park	9.0 m	123 m

Room	Equipment	Size	Area
Station Power Services Substation	15kV LB switch, Station Services Power Transformer, 600V Distribution switchboard, 120/208 distribution transformer, Utility power meter, customer meter, panelboard, heaters, lights, UPS, transfer switch, TVSS, generator interface, ground bus, exhaust fan	10m x 5m	50 sq.m
Platform Services Electrical	600V panelboard, 120/208 distribution transformers, 120/208V panelboards, ground bus, lights, heaters, exhaust fan	3m x 4m	12 sq.m
Communications	CCTV Matrix, Optical Fibre Comm. Hardware, 120/208V panelboard, Clock controller, PA amplifier, Video IP encoder, Optical Fibre Node, patch panels, telephone termination board, A/C unit, ground bus, BMS panel, C-Cure panel (refer to Ch 8, Section 8.10.1)	5m x 6m	30 sq.m
Platform Comm. Hub/ Signals Termination	Optical Fibre patch panels, Copper media patch panel, signals termination cabinet, signals relays/timers/switch cabinet, lights, cooling fan, heaters	2m x 4m	8 sq.m
*Signal Relay	Power equipment, relays, optical fibre node, control panel, UPS, generator	6m x 7m	42 sq.m
Traction Power Substation	Rectifier Transformers, Power Transformers, 15kV Primary Switchgear, DC switchgear, Utility Power Meter, heaters, lights, UPS Ground bus, substation ground grid, exhaust fan	10m x 11m	110 sq.m
Utility / Janitorial Storage	Mop Sink, Snow Cleaning Equipment, Floor Scrubber, Counter / Vanity	2.5m x 3m	7.5 sq. m
Mechanical	Pumps, fans, motors	TBD	TBD
Vacuum	Central Vac System, up to two (2) 45 gal drums	TBD	TBD
Elevator Machine	Motors, etc.	TBD	TBD
Permanent Generator	Generator, fuel tank	TBD	TBD

* Equipment sizing requirements by Signals provider may facilitate smaller room size engineered to suit.

Note: TBD – To be Determined by Consultant

APPENDIX III

Risk Assessment Criteria for Placement of Garbage / Recycling Receptacles

(As it Relates to Risk to People, Operations and Critical Infrastructure)

APTA Category	Description	Risk Element	Low Risk Element	Comments
Pedestrian access and egress points to/from stations			X	See Note 1
Areas where people congregate	Platform level		X	See Note 1
Pedestrian bottlenecks	Stairways/escalators		X	See Note 1
	Elevators		X	See Note 1
Location of critical structural elements in underground stations	Columns	X		major impact of structural failure
	Load bearing walls	X		major impact of structural failure
Location of critical structural elements in surface stations	Columns		X	reduced impact of structural failure
	Load bearing walls		X	reduced impact of structural failure
Walkways	Hallways		X	See Note 1
	Open walking areas		X	See Note 1
Glass	Glass enclosures	X		produces significant amounts of shrapnel
	Small glass barriers		X	produces limited amounts of shrapnel
Enclosed spaces	Alcoves/vestibules	X		receptacle not visible to pedestrians; poor blast dispersion
Ceiling height			X	See Note 1
Utilities	HVAC		X	limited potential for secondary effects
	Smoke fans	X		critical to evacuating smoke
	Electrical		X	limited potential for secondary effects
	Communications	X		incident reporting/emergency response
	Gas lines - main feeds	X		impact of secondary explosion is major
	Gas lines - line connections		X	impact of secondary explosion is lesser
	Fire life safety systems i.e. main sprinker valve		X	limited potential for secondary effects
	High pressure steam	X		potential for secondary effects
	Signals room/substation	X		required to maintain power/train control
Flammable and toxic materials			X	minimal storage of materials in LRT stations

Note 1: In general, Edmonton's LRT system currently is at a low risk level to the threat of an explosive event. The risk is mitigated by the use of clear plastic receptacles placed in highly visible areas.

LRT DESIGN GUIDELINES

Chapter 11

2017 EDITION – Revisions Tracking Form

Section	Reference	Revision General Description	Issue Date
11.4.3	Last paragr.	Added requirement for twist lock receptacle in public areas.	July 2017
11.5.1	Last paragr.	Added requirement for consultant to develop spare parts list.	
11.5.2.2	Colour list	Updated standard colours.	
11.5.2.3	Colour list	Updated standard colours.	
11.7.3.2	Bullet list	Added requirement for drain valves on remote fuelling lines.	
11.9	Bullet list	Added requirement for water resistant smoke detectors in crawl spaces.	
11.9	Bullet list	Added requirement for anti-tamper cover on fire alarm pull station.	
11.10.3.1	Section	Changed preference to LED lighting, other minor changes.	
11.10.7.1	Last bullet	Clarified power connection.	

11.0 ELECTRICAL SYSTEMS

		Page
11.0	**ELECTRICAL SYSTEMS**	**1**
11.1	GENERAL	1
11.1.1	Introduction	1
11.1.2	Abbreviations	1
11.1.3	Applicable Codes, Regulations, Standards, Practices, Reference Guidelines	1
11.2	SYSTEM LOADS	2
11.2.1	Demand Factors	2
11.2.2	Traction Power	3
11.3	SYSTEM POWER CHARACTERISTICS	3
11.3.1	Utility Power Transmission	3
11.3.2	Systems Voltages	3
11.3.3	Capacity	3
11.4	SERVICES AND DISTRIBUTION	4
11.4.1	Supply to Signal and Communication Rooms	4
11.4.2	Panel Board Locations	4
11.4.3	ROW Maintenance Power	4
11.5	MATERIALS	4
11.5.1	Objectives	4
11.5.2	Identification	5
11.6	EQUIPMENT	6
11.6.1	Motors	6
11.6.2	Transformers	6
11.6.3	Disconnect Switches and Fuses	7
11.7	EMERGENCY POWER SYSTEMS	7
11.7.1	Manual Transfer Switch	8
11.7.2	Automatic Transfer Switch	8
11.7.3	Standby Rated Fixed Mounted Generators	8
11.7.4	Portable Generators	10
11.8	ELECTRICAL HEAT TRACE SYSTEMS	11
11.8.1	General Requirements	11
11.8.2	Cables	11
11.8.3	Control Panels and Accessories	11
11.8.4	Power Services	12
11.8.5	Snow and Ice Melt Systems	12
11.9	FIRE ALARM AND DETECTION	12
11.10	LIGHTING	13
11.10.1	General Design Objectives	13
11.10.2	Performance Standards	13
11.10.3	Standard Lighting Elements/Fixtures	13
11.10.4	Illumination Levels	14
11.10.5	Lighting Control Systems	16

11.10.6 Lighting Energy Conservation Measures 16
11.10.7 Emergency Lighting 16

11.11 METERING 17

11.11.1 Utility Metering 17
11.11.2 Distribution Equipment Metering 17

11.12 GROUNDING AND BONDING 17

11.12.1 Bonding 17
11.12.2 Ground Fault Protection 19

11.13 DUCTBANKS AND CONDUITS 19

11.13.1 General 19
11.13.2 Ductbank Construction General Requirements 22
11.13.3 Conduits and Raceways Additional Requirements 23

11.14 UTILITY SERVICES COORDINATION REQUIREMENTS 24

11.14.1 General 24
11.14.2 Exceptions 24

11.15 TESTING AND COMMISSIONING 25

11.16 STANDARD RECORD DOCUMENTS 25

List of Figures

Figure 11.1 - Typical Communication Ductbank
Figure 11.2 - Typical Power and Catenary Ductbank
Figure 11.3 - Vault Detail
Figure 11.4 - Typical Pullboxes

11.0 ELECTRICAL SYSTEMS

11.1 GENERAL

11.1.1 Introduction

This chapter provides the design guidelines for the electrical systems for all LRT facilities and components including those located in the ROW other than the power that is required to propel the LRV's (refer to Chapter 6, Traction Power).

The major topics included in this chapter are system loadings and power characteristics, electrical equipment and materials, lighting, including emergency lighting, grounding and ground fault protection, fire alarm and detection systems, conduits and combined ductbanks.

For the design of all electrical systems, it is incumbent upon the Consultant to utilize sustainable design elements including LEED protocol where applicable and practical. Refer to Chapter 1 Section 1.1.6 regarding the City Sustainable Building Policy #C532.

11.1.2 Abbreviations

CDP	-	Central Distribution Panel
EM	-	Emergency
EMT	-	Electrical Metallic Tubing
HID	-	High Intensity Discharge
AHJ	-	Authority Having Jurisdiction
LEED	-	Leadership in Energy and Environmental Design
MDP	-	Main Distribution Panel
MUT	-	Multi-use Trail
PDC	-	Power Distribution Centre
PMG	-	Permanent Magnet Generator
*ROW	-	Right-of-Way
RSC		Rigid Steel Conduit
RTO	-	Motor Thermister Relay
THD	-	Total Harmonic Distribution
TP	-	Traction Power
ULC	-	Underwriter's Laboratories of Canada
UPS	-	Uninterruptible Power Supply

***Note:** ROW is defined as the area within which the LRT trackway and all its related system elements and facilities are placed. It is defined by a legal boundary or limits referred to as the LRT ROW Limit. The Consultant should refer to Chapter 3 Clearances and Right-of-Way, Section 3.2.3 for other ROW related definitions.

11.1.3 Applicable Codes, Regulations, Standards, Practices, Reference Guidelines

Unless stated otherwise, all design activities, equipment and material selection must conform or exceed the requirements of the latest editions of all applicable federal, provincial, and municipal codes and regulations.

<u>Codes, Regulations, Standards</u>

Alberta Building Code (ABC)
Alberta Electrical and Communication Utility Code (AECUC)
Alberta Electrical Code Regulation (AECR)
American National Standards Institution (ANSI)
Alberta Safety Code Act (ASCA)

American Society of Heating, Refrigerating and Air Conditioning Engineers (ASHRAE)
American Society for Testing and Materials (ASTM)
Canadian Electrical Code (CEC)
Canadian Electrical Manufacturers Association (CEMA)
Canadian Government Specifications Board (CGSB)
Canadian Standards Association (CSA)
Electro Federation of Canada (EFC)
Electrical Equipment Manufacturers Advisory Council (EEMAC)
Illumination Engineering Society Lighting Handbook (IES)
Institute of Electrical and Electronics Engineers (IEEE)
International Society for Measurement and Control (ISA)
National Building Code of Canada (NBC)
National Electrical Manufacturers Association (NEMA)
National Fire Protection Association (NFPA)
Occupational Health and Safety Act (OHSA)
Underwriters Laboratories of Canada (ULC)

Reference Guidelines

Accessibility for Elderly and Handicapped Pedestrians
City of Edmonton Design Guide for a Safer City
Edmonton Transit System LRT Portal Lighting Study – BGME April 2003
EPCOR Customer Connection Guide
EPCOR Underground Distribution Manual
EPCOR Utility Standards Manual
Going Places – Accessibility Needs of Visually Impaired Travelers in Transportation Facilities, CNIB 1997
LEED Green Building Rating System
NFPA 130 Standard for Passenger Rail Systems
Road And Walkway Lighting Manual – Transportation Services Department
TCRP Report on Passenger Loading
Transportation Services Electrical Services Plan (TESP)

11.2 SYSTEM LOADS

The guidelines presented herein apply to AC power systems in the following facilities:

- LRT Stations and adjacent related facilities such as Transit Centres
- Signal, Communication and other service rooms and ancillary buildings
- Tunnels and Portals
- TPSS buildings
- ROW appurtenances
- All other LRT related facilities such as Park and Ride lots

11.2.1 Demand Factors

The electrical and mechanical equipment requiring power includes but is not limited to, the following:

- Communication Systems Components
- Controls (Building Management System)
- Maintenance Receptacles
- Elevators and Escalators
- Lighting
- Emergency Lighting and Power Systems
- Fare Collection Equipment

- Space Heating, Ventilation and Air Conditioning (HVAC)
- Heat Tracing
- Motors
- Pumps
- Signals
- Signage (Variable Message system, architectural fixed signs, monument signs)
- Snow Melt System
- Vacuum System
- Fare Equipment
- Vending Equipment

11.2.2 Traction Power

The design and engineering of the Traction Power system is specialized and is to be performed by a pre-qualified, approved and experienced Consultant. For further guidance on the traction power system refer to Chapter 6, Traction Power. Chapter 6 provides the electrical requirements specific to the DC traction power supply and distribution system.

11.3 SYSTEM POWER CHARACTERISTICS

11.3.1 Utility Power Transmission

EPCOR is a major utility services provider in Edmonton and to the LRT system. If contracted, the EPCOR Customer Connection Guide should be referred to for electrical connection and wiring details. An EPCOR Customer Engineering Services Representative is to be contacted for site-specific planning, details and constraints. An EPCOR service representative can be reached at 412 - 4510 or 412 -7726. It is advisable that the Consultant engage the services and input of EPCOR early and continuously throughout the duration of the project. The Consultant must obtain clarity from EPCOR on submission requirements required to engage their services.

The University of Alberta is also designated as a utility service provider at site specific locations and operates as such. If contracted to provide utility power to the LRT system, the Consultant should contact and coordinate with the University of Alberta Utilities for all electrical utility matters for areas under their jurisdiction. A University of Alberta service representative can be reached at 492-4021. The University of Alberta has a multi year services contract with “The Inspections Group” as their electrical inspection agent or AHJ.

The University of Alberta utility and campus wide electrical design standards may apply to installations that are under the direct operational and maintenance control of the University of Alberta. University of Alberta Utilities must be consulted to confirm their requirements.

11.3.2 Systems Voltages

LRT Stations supplied voltage is dependant on the utility provider’s existing or planned electrical distribution system.

For the purpose of these guidelines, **High Voltage** is defined as 750 V AC and greater (e.g. 13800 V). **Low Voltage** is defined as less than 750V AC (e.g. 600/347 V 120/208 V 3 - Ø 4 - W).

11.3.3 Capacity

Capacity is defined as the required load as per the load calculations plus 30% for future expansion.

11.4 SERVICES AND DISTRIBUTION

Service equipment must be rated to withstand the published fault current available from the utility service provider (EPCOR, University of Alberta or others). Fault levels and protection should be coordinated with the utility service provider.

11.4.1 Supply to Signal and Communication Rooms

To handle the expected loads from communications equipment, separate branch circuits for each of the respective loads, or equivalent combinations thereof, must be provided. Power for communication equipment must be on separate protected circuits with no other loads on the circuit.

The emergency power source for signal and communications room can either be an emergency generator or a UPS or both.

The power requirements for the signals and communication systems must be carefully coordinated.

ETS is to define the philosophy of operating the system and stations during a power outage and how much time they require continuous emergency power to be available based on the assumption that the traction power system is energized. ETS must confirm the minimum run time requirements for the emergency power supply at each location in which either signals equipment or communication equipment is found.

Signals equipment located outside of, or remote from either a TPSS, Transit Centre, LRT Station or other similar structure, may be utility fed with no backup from a generator or UPS. Specifically, signals equipment located in crossing controllers may be fed from ROW power originating from a source.

11.4.2 Panel Board Locations

Branch circuit panelboards should be located near the area being served (preferably in a non-public service area). In all cases where it is practicable panelboards should be located at a level allowing it to be serviced. Panel Boards should ideally be placed within service rooms dedicated to the electrical system.

11.4.3 ROW Maintenance Power

Weatherproof 15A / 120V duplex receptacles are to be installed at 30 m intervals through tunnel sections, at tunnel track switches and along station platforms.

Weatherproof convenience outlets, duplex receptacles are to be provided at service points such as near signaling termination cabinets, near emergency phone locations, near ROW phone locations, near track blowers, at PDC locations, etc.

To resist vandalism, receptacles must be of nylon face construction.

To resist loitering, provide twist lock electrical receptacles at locations that are easily accessible by the public.

11.5 MATERIALS

11.5.1 Objectives

Material and device selections should be based on the following:

- Utilization of materials impervious to corrosion, resistant to the effects of water and the effects of chemicals that may be present.
- Minimizing maintenance or avoiding failure during the long service life expectancy of the LRT facility.

- Being capable of withstanding rough usage and vandalism common to public facilities.
- Being resistant to the efforts of unauthorized personnel attempting to remove (theft) installed equipment during and after construction.

When used in similar applications, devices and materials should be standardized as much as possible throughout the LRT system.

All materials to be utilized must have prior CSA approval. If CSA approval has not been obtained then approval for its use must be sought from ETS and/or the AHJ.

During the design, the consultant should determine a spare parts list for each component, and discuss with ETS for agreement.

11.5.2 Identification

11.5.2.1 General

Colour coding, identification and methods of paint finishes to electrical equipment must be specified and carefully supervised during construction.

All electrical fittings, supports, hanger rods, pullboxes, channel frames, conduit racks, outlet boxes, brackets, clamps, etc. must have a hot dipped galvanized finish or powder coat enamel paint finish over a corrosion-resistant primer.

All enclosures located outdoors or in a tunnel or grade separation must be made of stainless steel. All fittings, covers, bolts and hinges associated with these enclosures must be made of stainless steel.

All interior panelboards, distribution centers, motor control centers, transformers, etc., must be factory finished in alkyd high gloss enamel applied over corrosion-resistant primer.

Note: Matte or flat type finish paint is not acceptable.

The extent of tagging of electrical equipment and systems must be discussed in detail with the ETS and AM&PW Facility Maintenance personnel prior to specifying.

11.5.2.2 Colour Coding of Systems Elements

System colours including all associated equipment enclosures, terminations and pullboxes should be as follows:

Above 750V	grey	RAL 7035
347/600V	sand	CIL-BH-355-7
120/208V	grey	CIL-BH-94222
Fire Alarm	red	CIL-BH-94351
Telephone/Data	blue	CIL-BH-878-9
PA/VMS	blue	
CCTV	yellow	
Low voltage switching	black enamel	

Emergency power pullboxes, etc. must be clearly labeled with 25 mm “EM” stenciled red letters over the system colour.

Transformer enclosures are to be finished in accordance with primary voltage colour as outlined above.

11.5.2.3 Colour Coding of Conductors

Conductors must be colour coded throughout the facility with the same colour applying to the same phase throughout. Colour coding must be by insulation colour or permanently applied colour banding at all distribution centres and panels in accordance with the following:

Equipment bonding conductor - green

Identified Conductor (Neutral)	- white
120/208V phase wires	- red, black, blue
347/600V phase wires	- red, black, blue
Data cabling	- Cat 6 rated, blue
Voice cabling	- Cat 5E rated, grey

At all distribution centres, pullboxes, wireways, etc., feeder conductors of each feeder group must be neatly laced or clipped into a feeder group.

Fire alarm system control cable suitable for addressable fire alarm systems must be utilized and installed in conduit systems.

11.5.2.4 Nametags

Nameplate schedules are to be prepared and issued to ETS for their review and approval. Final markings, as determined in consultation with ETS, are to be placed on the drawings for implementation during construction.

MDP's, CDP's, power panels, lighting panels, disconnect switches, starters, contactors, motor control centers, terminal cabinets, junction boxes, On/Off switches and transformers must be clearly identified by permanent labels in accordance with the following requirements:

- Nametags must be of 3-layer laminated plastic, black/white/black with etched lettering giving white letters on black background where called for on the drawings or in the specifications. Letters on nametags must be a minimum of 9.5 mm in height. All nametags must be mechanically fastened with either machine screws and or rivets, in addition to nametag adhesive backing.
- Terminal strips, etc. must be identified in terminal cabinets for control wiring, closed circuit television distribution, intercommunication, sound, telephone, fire alarm, timing, etc., and must utilize typed lists.
- Communication vaults, catenary power vaults and utility power vaults must be clearly identified as shown on the drawings.
- Panels, along with their rated voltage, must be as shown on drawings. Where panels are located in areas other than electrical rooms, nametags must be clearly identified as shown on drawings.
- Transformers along with capacity, primary and secondary voltages must be clearly identified as shown on drawings.
- For disconnect switches, starters and contactors the equipment being controlled and the voltage must be indicated.
- The areas being served by On/Off switches must be indicated.
- Terminal cabinets and pull-box systems and voltages must be indicated.
- Distribution Centres must be identified as indicated on the drawings and must show the main voltage or voltages if more than one is used.
- Motor Control Centres must be identified as shown on the drawings and must show main voltage or voltages if more than one is used.

11.6 EQUIPMENT

11.6.1 Motors

Supply Voltage requirements are:

- Motors rated at 0.56 kW or larger must be supplied by 208V 3Ø or 600V 3Ø, if available.
- Motors rated at 0.37 kW or smaller must be 120V 1Ø.
- Motors for variable speed drive motor applications must be Inverter duty rated.
- All motors are to be a high energy efficient type.

11.6.2 Transformers

Transformers are to be located away from any critical low noise areas and must be mounted on neoprene-steel-neoprene vibration isolation pads with flexible conduit connections. In addition, they should have the following features:

- Dry type construction
- TP1 “Energy Star” and C802.2 compliant or rated
- High voltage transformers are to be provided with core and coil temperature gauge and alarms.
- High Voltage transformers to be in compliance with EPCOR Customer Connection Guide requirements.

Note: Confirm additional requirements with University of Alberta Utilities if the project comes under their direct jurisdiction. University of Alberta Utilities transformer standard is “Cast-Coil” type transformer for primary voltage applications. This standard is only applicable to installations where the University of Alberta Utilities operates and maintains the equipment.

Heat rejection rates must be determined for all transformers. The cooling requirements for all transformers must be coordinated with the mechanical design consultant.

11.6.3 Disconnect Switches and Fuses

Disconnect switches, complete with lock off means, are to be provided for all motors. Fused disconnect switches are discouraged. The use of circuit breakers should be utilized, if required.

Three phase disconnect switches are to be quick make, quick break, three pole, three or four wire complete with bonding lug. In general, the enclosures are to be of type EEMAC 1. In some installation situations special enclosures may be required.

The maximum length of liquid tight flexible conduit from the disconnect switch to the electrical apparatus is 1 m. If TECK 90 cabling is utilized, cable length is not an issue. Approved TECK 90 gland type connectors are to be utilized for all TECK 90 cabling applications. Flexible conduit (clamp type) connectors are not approved for TECK 90 cabling applications.

All disconnect switches are to be suitably labeled with lamicoid labels that includes the motor, voltage and service source identification (refer to Section 11.5.2).

11.7 EMERGENCY POWER SYSTEMS

Emergency power sources should be selected on the basis of type of system (sensitivity), reliability and most economic life cycle cost. Sources include:

- Uninterruptible Power System (UPS)
- Central battery system (battery packs)
- *Second utility power source
- Standby fixed mounted diesel engine generator system
- Portable generator

***Note:** A redundant power source should only be selected if it can be demonstrated that a failure of the primary utility service will affect the secondary utility service.

In the event of outage, or loss of normal/utility power, Emergency Power Systems must be designed to provide power to systems such as communications and control, signals, stations and ancillary facilities, traction power equipment (controls, relaying, SCADA, communication equipment, and alarm functions) all areas in accordance with the following general guidelines:

- If two utility feeds with independent transformers are provided with an automatic transfer then a 2 hour UPS (based on peak operation) is required. The automatic transfer set needs to be alarmed on BMS.

- If two utility feeds are provided to one transformer, it is not classified as redundant as there is a single point of failure.
- If an emergency generator set is available with is own transformer then a 2 hour UPS (based on peak operation) is required. The generator set needs to be alarmed on BMS.
- If no secondary backup is available then 8 hours of UPS backup is required.
- Type I and II passenger stations must have dual redundancy.
- On other passenger stations redundancy can be provided by a plug for the portable generator set provided the capacity of the portable generator is large enough to handle the essential services of emergency lights, CCTV, fire alarms, PA, TVM, BMS, smart cards, and signals equipment, if any.
- Backup power is to also include switch machines, switch blowers, crossing warning systems, TVM, smart cards, CCTV (this includes cameras, recorders, network infrastructure etc).

11.7.1 Manual Transfer Switch

Manual transfer switches are only permitted for installation to accommodate portable generators. The manual transfer switch must be able to inhibit, alert and alarm against phase rotation errors. The manual transfer switch must be interlocked with the normal power supply. An interlock on the normal power supply must be opened before the manual transfer switch can be closed into the emergency power supply.

11.7.2 Automatic Transfer Switch

In all cases where a standby generator is permanently located at a site and is operational, a contactor or circuit breaker type CSA approved transfer switch should be used. Molded case switches with integral protection are acceptable.

Transfer switches should:

- Utilize electronic control circuitry for system operation and monitoring.
- Contain a microprocessor based transfer logic controller.
- Be open transition – break-before-make operation type.
- Be equipped with a bypass switch feature.
- Be of 3-pole design for switching the current carrying conductors of each phase.
- Be designed to avoid nuisance tripping of the ground fault protection schemes.

11.7.3 Standby Rated Fixed Mounted Generators

11.7.3.1 General

Standby rated fixed generators must be installed in Type I stations to provide emergency power in the event of a power failure. In general, permanent emergency generators should also be installed in Type II stations; however, this requirement will be reviewed on a station by station basis at the outset of preliminary design.

Portable generator(s) will be made available by ETS to provide emergency power to Type III stations in the event of a power failure (refer to Section 11.7.3.4).

11.7.3.2 Standby rated fixed Generators

Generators and day tanks must be located in a dedicated room within the traction power substation or similar building. Generators must not be located in the same room as the traction power equipment.

The fuel tank must be sized to hold sufficient fuel for the generator to run for at least 24 hours without re-fueling, or for as many hours that do not exceed the maximum fuel tank capacity allowed in the installation code for oil burining equipment.

The tank must not be buried. The room and generator footprint should be sized to allow for a generator that meets the needs of the station with an allowance for future loads.

Features

Standby rated emergency generators must have the following features:

- Are diesel engine driven alternator PMG types.
- Muffler systems are to be critical residential rated.
- Fuel oil storage to be sized to a minimum life safety systems loading. Do not oversize fuel storage capacity. ETS will provide additional direction for operations loading requirements.
- A fuel fill alarm station for fuel storage tank refueling.
- An electronic level control systems, integrated into the BMS (i.e. Siemens Miltonic 4 to 20ma level device or equal).
- A mechanical float fuel storage oil level indicator.
- Air ventilation dampers are to default to open should the BMS fail and the generator starts, but does not transfer. This is to ensure the generator remains operational should a power failure occur during cold weather.
- Equipped with electronic governor and a microprocessor based control system capable of integration into the BMS.
- Engine oil heater must be controlled by thermostat and de-energized when engine is running.

Exhausting Requirements

- The generator exhaust pipe insulation must be rated for the maximum exhaust gas temperature and covered with aluminum jacket.
- Suitable insulation and air pocket (thimble) must be provided to prevent heat damage from exhaust stack.
- Where the exhaust stack comes out at street level, the architectural features should be compatible with the surroundings.
- Exhaust ports at street level must be shielded to ensure that the hot piping and exhaust gases do not endanger the public. The prevailing winds are to be considered when locating the exhaust pipe. Exhaust pipe must be arranged in such a way that it will not collect rain water.
- If required and recommended by the manufacturer the exhaust pipe muffler drain, complete with an isolation valve, must be connected to the nearest floor drain.

Fuel Storage Requirements

- Fuel oil storage tank is to be double walled welded steel or contained with seal tight sheet metal fabrication, or equal material. Wherever possible, incorporate the tank into the generator frame. The tanks are to contain leak detection contacts. The leak detection contacts must be connected to the BMS to provide an alarm condition.
- All tanks are to have a mechanical visual level indication at the tank and high/low level alarms both at street level and at the operators control terminal in the ETS Control Centre at Churchill Station. The low level alarm must be at a level that will allow six (6) hours of generator run time. Six (6) hours low fuel level alarm must be in addition to the 24 hour generator running time fuel capacity.
- Tanks are to be equipped with 4 to 20 mA level controller and connected to the BMS.
- The fuel filling station must be equipped with an audible alarm system to advise the refueling agent when the tanks are full.

Fuel Oil and Fuel Oil Vent Line Requirements

- Mechanical and tripping hazard protection of fuel lines from the storage tank to the generator engine is to be provided.

- Fuel tanks that are located in underground rooms must have fill and vent lines piped to street level.
- Fill pipes and spouts, vent pipes and level indicators must be located above sidewalk level to prevent water leaking into the station and ensure accessibility even with snow cover. Strive to minimize as much as practicable the length of piping from the fuelling location to the fuel tank.
- Remote fueling lines must be fitted with drain valves for water condensation.
- Access to the fuel spout for the fueling truck should be convenient.
- Fuel spout must have a lockable lid to prevent unauthorized access.
- Fuel oil fill lines must be schedule 40 steel pipe.
- Fuel oil vent lines must be screwed fittings.
- Valves and unions must be provided to isolate the tank and allow for full tank drainage.
- Vent pipe to be equipped with a mechanical whistle.
- The fill pipe hose connections are to be coordinated with ETS.

Requirements for Generator Room

The room housing the generator must incorporate the following spill retention measures:

- A concrete or concrete block curb dike. The storage area is to be sized to accommodate the entire contents of the fuel tank plus 25% freeboard.
- The perimeter sealed with a hydrocarbon rated sealant at the joints between the walls and floor.
- The entire room floor, including the sides and top of the dike curb, is to be sealed with a two-part hydrocarbon rated membrane.

Standby Rated Fixed Mounted Generator Sizing

The size of the generator will be based upon the values of the following loads, which are either mandated or recommended to be on emergency power:

- Signals equipment
- Communication equipment
- Emergency Exit Lighting
- Fire alarm
- UPS
- Station emergency lighting
- Ticket Vending Machines, Validators and Smart Card Readers
- CCTV equipment
- BMS Panel
- Security Panel
- PA/VMS
- Critical HVAC equipment
- Sump Pumps
- *Elevators

***Note:** Full operation of elevators is preferable. As a minimum elevators need to have automatic lowering to lowest publically accessible floor with the doors opening and remaining in the open position.

11.7.4 Portable Generators

In LRT stations (and platforms) where permanent emergency generators are not provided, a manual transfer and an emergency power distribution system must be provided. The manual transfer switch must be serviced from a remote located emergency power receptacle complete with over-current protection, reverse rotation protection and weatherproof receptacle. ETS will provide a portable generator during extended outages. The receptacle and manual transfer

switch must be compatible with the ETS supplied portable generator. The output of the portable generator is 600 Vac, 3 phase, 4 wire, 60 KVA.

Upon request, ETS will provide the required pin and sleeve designation of the fixed mounted outlet that will be used as the portal to connect the portable generator to the emergency distribution system.

The emergency power tie-in assembly including generator receptacle must be located adjacent to the platform and have sufficient space adjacent to it to house the generator without unduly impeding pedestrian and vehicular traffic or causing a safety hazard.

The manual transfer must be designed using a kirk key system or approved equivalent to prevent accidental interconnection of the portable generator and utility lines.

11.8 ELECTRICAL HEAT TRACE SYSTEMS

11.8.1 General Requirements

Heat tracing is to be provided for the following elements when exposed to temperatures below freezing:

- Eavestroughs
- Roof drains
- Rain water leaders
- Gutters
- Drainage troughs at portal entrances
- Drainage catchments at pedestrian ramps and stairs
- Water Lines
- Sanitary drain lines
- Storm water drain lines
- Dry line sprinkler drop valves (where the potential for freezing exists).

Heat tracing must be provided where it is determined that sufficiently low temperatures will be present to cause ice build-up within the track drainage trenches located in underground structures.

All heat tracing systems must be designed for remote operation by the BMS control system.

11.8.2 Cables

Heat tracing cables must meet the following requirements:

- Are self regulating heating cables for freeze protection on pipes and drains.
- Are mineral insulated style with stainless steel or alloy 825 sheath for installation when embedded in concrete.
- The recommended voltage rating is either 120V or 208V.
- Have cold leads of sufficient length to run from in feed points to power connection boxes.

11.8.3 Control Panels and Accessories

A zone control system is to be provided by the heat tracing control panel. Control panels are to utilize microprocessor controls systems monitored and controlled by the BMS.

The control panel and associated heat tracing equipment consists of the following:

- Ground fault sensing element
- Control transformer
- Multi-pole heating contactor
- Freeze protection thermostat complete with sensor
- Snow sensor to detect falling or blowing snow
- Gutter ice sensor to detect freezing in gutters and downspouts

- Control relay for BMS override and local disconnect means

The assembly is to be contained within an EEMAC enclosure suitable for its location.

11.8.4 Power Services

The heat tracing system is to be supplied from panel boards located at the nearest LRT service location (i.e. station, portal, etc.).

All power connections, in feed and junction boxes, are to be appropriate for the location in which they are placed and if located outdoors or in tunnels they are to be watertight enclosures appropriate for accepting either in slab or surface conduit entry.

11.8.5 Snow and Ice Melt Systems

As a general requirement:

- Exterior stairs and ramps should be protected from snow and ice accumulation by providing either roof cover or snow melting devices.
- Provide local and remote controls for each stairway for snow melt installations.

The Consultant should, early in the design phase, review with ETS the performance of snow melt systems installed on the existing LRT system.

Mechanical (glycol) means of snow melting, where it is cost effective, practicable and applicable may be considered as an option to concrete imbedded electric snow melt systems.

11.9 FIRE ALARM AND DETECTION

At each designated street address entrance to an LRT station there must be an alarm annunciator panel indicating fire alarm zones and system status. Fire alarm systems must be of the addressable type and monitored by the BMS through the ETS Control Centre at Churchill Station.

If a ULC rated emergency evacuation system is not required, convenient access to the PA system must be provided for the Emergency Response Department's use at all annunciator panels.

Automatic shutdown of air systems and elevators must be incorporated into the Fire Alarm system. Elevators are to home to the nearest floor and then lock out until the fire alarm system has been restored. Escalators are to be kept running during alarms to provide faster and safer exiting.

Consideration must be given to a method of preventing fire doors from closing during the weekly generator test. The generator test momentarily shuts off the power which is considered to be a power failure in the system, which in turn, activates the closing of the doors, etc.

Additional requirements are:

- Annunciator panels must be installed with a flush mounted polycarbonate (Lexan) shield to render them vandal resistant.
- A dedicated telephone connection to the ETS Control Centre must also be located at the annunciator panels for use by the Emergency Response Department.
- Rooms with critical equipment that must have fire protection include:
    - Communication rooms
    - Mechanical rooms
    - Electrical rooms
- Smoke detectors installed in station platform crawl spaces must be water resistant.
- All conduits must have a pull cord installed in them at the time of construction. Spare cords must be provided in conduits between annunciator and fire alarm cabinets.

- The provision of spare zones for future expansion of retail space or additional services.
- The provision of a manual pull-station at each entrance and exit.
- Manual pull-stations in public areas must have covers to prevent vandalism and misuse.
- The provision of an exterior audible and visual indicator at each building.
- All fire detectors, unless disqualified by the environment in which they are placed, are to be of the addressable type.

11.10 LIGHTING

The lighting guidelines presented in this section are intended to outline the functional requirements for site areas, pedways, stations and related service areas, tunnels, portals, open trackway (ROW), MUTS and transit parking, including park and ride areas.

Conformance to these guidelines is necessary to ensure lighting levels are adequate and the intended quality, convenience, efficiency and system safety requirements are provided.

Ease of maintenance should be a primary consideration in the selection of lighting systems and devices.

11.10.1 General Design Objectives

- Provide lighting systems that have good colour rendition and are of high quality suitable for hard usage applications.
- Select a luminaire with high efficiency to take the best advantage of the efficient source.
- Select readily available, low maintenance luminaires that have a long life.
- Luminaires are to be selected that will suit not only the environment in to which they are placed but also be effective against vandalism and theft.
- Luminaires should have UV stabilized polycarbonate diffusers, i.e. Lexan or equivalent. Glass luminaries are acceptable for luminaires that are out of harms way.

Lighting design principles for LRT stations are presented in Chapter 10 Stations and Ancillary Facilities, Section 10.2.7. All or part of these principles, can also be applied to other components of the LRT system that requires lighting.

Refer to the City Road and Walkway Lighting Manual for lighting standards related to these facilities.

11.10.2 Performance Standards

- All luminaires should be commercial/industrial quality.
- All platform, tunnel, underpasses and exterior luminaires (ROW) should be IP 66 rated.
- The average to minimum uniformity ratio for interior lighting should not exceed 3 to 1.
- For exterior path and roadway lighting, the minimum uniformity ratio should be 6 to 1.
- All hinging mechanisms must be metallic (plastic is not permitted).

11.10.3 Standard Lighting Elements/Fixtures

11.10.3.1 Lighting Sources

In general, LED lights are the preferred lighting source. In some instances, other lighting sources could be considered. The designer shall provide recommendations for lighting sources.

Guards should be used to protect lighting in areas where there is potential for vandalism or breakage (public use areas, low mounting heights in utility areas).

The light source selected should be based on application, lamp life, source lumen efficacy, ease of maintenance, color spectrum and illumination control (photometric data).

A white light source is required to provide improved visibility and color rendering on LRT platforms. All lighting on the LRT platform to must be supplied from an uninterruptible power supply (UPS). Light tube lighting is not permitted.

Consideration should be given to protecting overhead lighting in public areas from falling by means of a safety chain fastened to the roof or ceiling. Factors to consider in determining if a chain is required include: type of luminarie, its location, potential for vibration etc.

11.10.3.2 Lighting Ballast

- High efficiency electronic ballasts are to be used with THD<20%. Pulse magnetic ballasts are to be used for HID lighting systems.
- Ballasts should be readily accessible through the luminaire opening or remotely mounted for ease of maintenance.
- Where luminaries are not easily accessible (i.e. over stairwells), ballasts must be remote mounted.
- Closed units, such as sign boxes or display cases, must have adequate ventilation to dissipate ballast and lamp heat.

11.10.4 Illumination Levels

In general, minimum lighting levels (except where otherwise noted) should be maintained at 900 mm above the finished floor level of the facility or area being lit. All lighting levels provided in the following tables are in *Lux.

***Note:** Lux is the SI unit of illuminance. 1 Lux = 0.0929 foot-candles

The following minimum illumination levels have been established as a result of the experience gained by ETS during the entire LRT operating period in Edmonton. Higher levels in public circulation areas are preferred.

Station Interior

Location	Average Minimum Lux	Emergency
[1]Public Circulation Areas	200	10
[2]Platforms	200	10
Platform Shelters	200	10
Stairs, Ramps, Escalators	200	10
Elevators	400	10
Service Rooms	500	10
Washrooms	300	10

[1]Public Circulation Areas include passageways, pedway structures,entranceways, mezzanine levels, ticketing areas
[2]Type I, II, III station platforms
Refer to Chapter 19 for lighting levels in open style Parkade structures.

Exterior Areas

Location	Average Minimum Lux	Emergency
Stairs	55	N/A
Walkways/Ramps	25	N/A
Private Vehicle/Taxi Drop-off	25	N/A
Surface Parking Lots	25	N/A
Transit Centre Shelter Island	*20	N/A

***Source:** Transit Centre Design Guidelines

Trackway

Location	Average Minimum Lux	Emergency
Open ROW	N/A	N/A
[1]Tunnels - Tracks and Catwalks - Cross-Overs - Track Switches	20 20 40	10 10 N/A
Grade Separation (short underpass)	20 to 50 [2]nighttime	10

[1]Lighting within tunnels should be able to provide for safe egress in an emergency situation and sufficient illumination levels for operational and maintenance purposes.
[2]The Consultant should review the lighting upgrade completed for the Belgravia Road Underpass and utilize it as the guide for daytime light levels.

Tunnel - Portal Transition

Special consideration must be given at the tunnel entrances to provide for the transition of lighting levels from daylight to darkness. The length of threshold/transition lighting should be based on LRV operating speeds and the corresponding safe stopping distance. The Consultant must review the following documents and take into account the given criteria in their lighting design.

- Edmonton Transit System LRT Portal Lighting Study – April 2003
- American National Standard Practice for Tunnel Lighting – ANSI/IESNA RP-22-96

Zone	Length	Daytime Lux	Night Time Lux
1	First 30m	5000	20
2	Next 30m	500	20
3	Next 30m	50	20
4	Remainder	20	20

Other

Location	Average Minimum Lux	Emergency
*TPSS (Interior)	500	10
TPSS. (Exterior) Provide lighting over doorways TPSS (Parking Area)	 50 10	N/A N/A N/A

***Note:** Refer to *SS Electrical Equipment Engineering Design Manual, Section 10.0 Building Services*

For additional guidelines and requirements, the Consultant should refer to the IES Lighting Handbook. The Consultant must coordinate with ETS operations personnel to verify that the proposed lighting levels are acceptable and appropriate for the application.

11.10.5 Lighting Control Systems

Lighting Control Systems should provide following features:

- Low voltage lighting control, monitored and controlled by the BMS.
- Motion sensor or timer control in service areas.
- Motion sensor control in public areas with CCTV tie in during non-service hours for security purposes.
- Exterior luminaries, including luminaries in signage, must be controlled by photo-cell and the BMS. Exterior light control must include a maintenance bypass switch (Hand-Off Auto).

11.10.6 Lighting Energy Conservation Measures

As per City Policy #C532 LEED protocol should be utilized, where applicable and practical. Innovations to reach acceptable lighting levels and lower operating costs are encouraged subject to City Council approved capital budgets.

11.10.7 Emergency Lighting

Provision of emergency lighting systems is required by code.

11.10.7.1 Power Supply Sources

- Wherever possible, provide for a second utility feed to eliminate the need for an emergency generator.
- If a second utility feed is not available, emergency generators (refer to Section 11.7) are the power source for general emergency operation. Within 15 seconds of a power failure, the emergency generator powered system must start up and be operational to provide emergency operation through the stations and the underground track areas. The generator system should have a 24 hour capacity before refuelling (refer to Section 11.7.4). Start-up must be by an automatic transfer switch that transfers the emergency lighting load to an emergency power source when the voltage from the normal source fails.
- The uninterruptible power supply (UPS) must provide power to emergency lighting in all station areas accessed by the public or staff which includes:
    - Station platforms
    - Stairways
    - Underground pedways
    - Utility rooms
    - Communication rooms
    - Washrooms

  UPS is preferred over battery packs and is to be backed up by a generator. The UPS capacity must be in accordance with the general guidelines stated above.

- Emergency lighting with self contained power source shall not be connected to the UPS system.

11.10.7.2 Circuiting of Emergency Lighting – Standby Generator Available

- The power supply for emergency lighting in service rooms should be 50% from the emergency bus (if available). In addition, stand-alone emergency lighting battery packs should be located in the electrical room and in the emergency generator room.
- Provide lighting to all public areas with 30% of the lighting supplied from the emergency bus.
- Provide all station platform lighting from the UPS.

11.10.7.3 Emergency Lamp Types

Emergency lighting sources can be LED, incandescent quartz, induction lamp or fluorescent to provide the required instant restrike in the event of a power failure.

Instant restrike devices used in conjunction with high intensity discharge lamps must be reviewed to confirm reliability and lamp maintenance.

11.11 METERING

11.11.1 Utility Metering

The Utility Service Provider must be consulted to determine the mandatory metering provisions that are to be provided.

The specifications must indicate that the Contractor is responsible for the meter and service application. The cost of the electrical service and the ongoing operating costs are by ETS unless directed by ETS to be otherwise.

At each utility metering point located within a station or transit centre a remote terminal unit (RTU) is required to allow for remote metering.

11.11.2 Distribution Equipment Metering

Panelboards or switchgear incorporating metering equipment must be constructed so that all meters, and transformers used with meters, are accessible. Metering transformers must not be installed in the rear section of the cubicle unless the cubicle is accessible from the back.

To avoid unnecessary delays, detailed plans of panelboards or cubicles should be submitted for approval as early as possible in the design phase to allow the Utility Service Provider to order any equipment necessary to complete the metering arrangements. The Utility Service Provider may request the Contractor to supply the digital meter. In this case the Consultant must obtain the meter specifications for inclusion within the tender documents.

Owner supplied distribution equipment metering is to be integrated into the BMS. This may also include all Utility Service Provider metering systems. The Consultant must confirm the need for revenue metering to be interfaced with the BMS.

Metering located along the ROW or along a Shared Use Path must be installed in a stainless steel weatherproof enclosure complete with a Lexan viewing window. The Contractor will be responsible for the application and installation of the service meter. The Owner will be responsible for the utility cost of supplying and installing the meter and the electrical service.

11.12 GROUNDING AND BONDING

11.12.1 Bonding

11.12.1.1 Bonding Bus

All electrical communication and signal equipment rooms must be provided with a 6 mm x 50 mm (*industry standard) copper bonding bus connected to the facility ground grid.

***Note:** The size may vary depending on the type of equipment being protected.

11.12.1.2 Connections

Ground electrode and grid cable connections should be made with compression type connectors installed with a suitable hydraulic press. Exothermic welding is only to be deployed where absolutely necessary.

11.12.1.3 Transformer Grounding

A grounding conductor must be provided running from the supply distribution center to the neutral on the secondary of the transformer and to the system grounding bus.

11.12.1.4 ROW Grounding in Tunnels or Grade Separations

There must be two separate grounding systems in tunnels: catenary grounding system, and ROW main grounding system. Two #2/0 AWG copper grounding conductors must be installed in the tunnel (one per track) for the catenary grounding system. The catenary grounding conductors must be surface mounted under the tunnel ceiling, run the entire length of the tunnel, and be interconnected to all the catenary overhead supports in the tunnel. The catenary grounding conductors must be terminated to ground grids at each end of the tunnel. All miscellaneous metallic objects within 2 m from the catenary overhead support must be bonded to the catenary grounding system.

The ROW main grounding system consists of two continuous #2/0 AWG copper conductors, one per track configuration. The ROW main grounding conductors must run the entire length of the tunnel 1 m above the top of the track. These ground conductors are installed within rigid steel conduits mounted on the surface within tunnel sections and imbedded within the concrete in open areas. These grounding conductors are connected to the ground grid at each station with 2 - #2/0 AWG ground conductors and at ground grids. Tie conductors are to be provided between the two conductors at 400 m intervals. Connect all miscellaneous bonding pigtails to the ROW ground conductors.

The catenary grounding system and the ROW main grounding system should not be connected.

11.12.1.5 Miscellaneous Bonding within Tunnels or Grade Separations

All miscellaneous metals located in the tunnel sections require bonding. This includes metal ladders, catenary poles, light standards, hand and guardrails, catenary protective shields, catenary brackets, junction boxes, control cabinets, conduits, fire line piping, and any miscellaneous metal brackets, etc. All miscellaneous metallic objects within 2 m from the catenary overhead support must be bonded to the catenary grounding system. All remaining metallic objects should be bonded to the ROW main grounding syatem.

All miscellaneous metal that is continuous (piping systems, conduit, etc.) is to be bonded at 50 m intervals and connected to the ROW or catenary ground conductors, depending on the distance between the metal and the grounding system. Unless determined otherwise, the pigtails connecting all miscellaneous metals to the main #2/0 ground is to be #2AWG in size.

Tunnel rebar for tunnel wall liner, etc. is to be bonded by pig tails of #2/0 AWG copper secured to the rebar with approved grounding clamps and brought through the tunnel liner formwork for termination. A minimum of 1.5 m of bonding conductor is to protrude through the finished concrete liner. Tunnel liner rebar is bonded at 50 m intervals.

11.12.1.6 ROW Grounding in Areas Outside of Tunnels or Grade Separations

The LRT ROW grounding system consists of two continuous #2/0 AWG stranded copper conductors, one per track configuration. These ground conductors are installed below the track ballast and may be routed along side or above the track drainage. The ground conductors are to be buried or may be installed within the track slab. These grounding conductors are connected to the ground grid at each station with 2 - #2/0 AWG ground conductors and at ground grids. Tie conductors are to be provided between the two conductors at 400 m intervals.

Connect the various miscellaneous bonding pigtails except for catenary masts to the ROW ground conductors. The ground conductors are not required to be tied to any of the concrete reinforcing steel unless it is shown in a Corrosion Report that this will be necessary. All connections are to be made using compression connectors. Ground/Bond conductors are not required within the concrete of duct banks.

For the catenary masts with feeders, there will be two ground grids per each catenary base: one ground grid for catenary pole grounding and the other for lightning protection grounding. The two ground grids must be separated by at least 2 m.

For the catenary must with no feeders, there will be only one ground grid per catenary base. This ground grid will be for catenary pole grounding .

All miscellaneous metallic objects (rail lubricator cabinet, hand rail, etc) within 2 m from the catenary mast are to be connected to the catenary mast ground grid.

11.12.1.7 ROW Miscellaneous Bonding in Areas Outside of Tunnels or Grade Separations

All miscellaneous metals located along the ROW require bonding. This includes metal ladders, station signs, crossing gates, signal bases, catenary masts, light standards, hand and guardrails, catenary protective shields, cable vaults, catenary brackets, junction boxes, pullboxes, control cabinets, conduits, crossing arms, signals cabinets and any miscellaneous metal brackets, etc. All miscellaneous metallic objects (rail lubricator cabinet, hand rail, etc) within 2m from the catenary mast are to be connected to the catenary mast ground grid. All remaining metallic objects will be bonded to the ROW main grounding system. Unless it is determined otherwise, and except for cable vaults, the pigtails connecting all miscellaneous metals to the main #2/0 ground is to be #2AWG in size. For all cable vaults connect to the main ground with a #2/0 conductor.

11.12.2 Ground Fault Protection

11.12.2.1 General Requirements

Ground fault protection should be provided on all major feeders if required by code or if the Consultant determines this would be a good design practice. Caution should be exercised when determining that ground fault protection is to be adopted. Ensure that proper coordination is possible between downstream overcurrent devices and upstream ground fault protected breakers. Coordination of all electrical overcurrent devices is to be undertaken in accordance with *IEEE Buff Book.

***Note:** Buff Book Standard Protection and Coordination of Industrial and Commercial Power Systems – latest edition.

11.12.2.2 Stray Currents

The Consultant must recognize that there is a potential for the presence of stray currents. Provisions may need to be made to facilitate the installation of protective systems that may be indicated as being necessary by tests on the completed and operating installation. The requirements for the work of the project being considered will be provided by a Corrosion Specialist Consultant. The Electrical Consultant is to refer to the results of the Corrosion Specialist's Report and then implement the published recommendations into their design. Electrical bonding or other treatments of rebar may be required. Refer to Chapter 13 Corrosion and Stray Current Control for the design guidelines related to this topic.

11.13 DUCTBANKS AND CONDUITS

11.13.1 General

Ductbanks and conduits provide a common, coordinated, protected electrical routing for the cable interconnections required for, and associated with, the operation and control of the LRT system.

Typically four (4) ductbank systems are provided:

- ROW Communications & Signals (CCTV, PA, Antennae, BMS, SCADA, Signals)
- Catenary Power – refers to the traction power feeds and returns between the TPSS's and the overhead catenary
- ROW Power – AC Power for trackway devices
- High Voltage Utility Power (Utility Service Provider power supply to TPSS)

Ductbanks are constructed within the LRT ROW (preferably along side the trackway) with cable vaults or pullboxes provided intermittently along the length of the duct bank (refer to following sections for spacing requirements).

If possible, or as required by Code, the four ductbank systems should be kept separate. Separation of the concrete encased duct banks must meet Code requirements. Routing and placement should follow good engineering practices.

Catenary power ducts and underground cables are generally located in the vicinity of substations and LRT stations.

LRT stations and tunnels contain many areas that can differ in temperature. This can cause potential condensation problems that must be considered in the design.

Duct drainage is an important consideration in duct bank design. Duct banks (except for ROW Electrica) must be sloped to vaults/pullboxes to prevent water traps. From these locations it is preferable to provide drain connections to nearby drainage systems. However, Row Electrical power duct banks are not required to slope to ROW Electrical power pullboxes for drainage due to the design and size limitation of the pulbox.

In addition to the applicable codes listed in Section 11.1.3 refer to the following:

- Utility Service Provider's utility standards for additional criteria related to high voltage applications and duct type.
- *Signals Engineering Standards Manual Section 5.0*, for additional criteria related to signals cabling and conduit.
- Chapter 6, Traction Power for the guidelines pertaining to conduit runs to and within the TP substation.

For additional criteria on traction power underground feeder duct construction refer to the *Overhead TP Manual Section 2.18.*

11.13.1.1 ROW Communications & Signals

A network of ductbanks is required for the connection of cables between Signal and Communication rooms and to related field devices along the LRT right of way.

A maximum spacing of 200 m is preferred between vaults and pullboxes.

Splicing of copper communications cabling within the cable vaults may be permitted, if approved by ETS, and a LRT Station is not in the immediate vicinity. All backbone fiber cables are to be routed between stations with no splices or terminations occurring. All splices and terminations are to be done at the LRT station communications room.

Underground ductbanks must be constructed of concrete encased conduit type DB2 or equivalent and reinforced with steel in accordance with the following requirements:

- For mainline ductbanks, the minimum configuration is 12 – 103mm ducts (refer to Figure 11.1).

- Conduits are to be spaced in accordance with the manufacturer's recommendations. The provision of duct spacers is preferred.
- The reinforcement steel (rebar) must be placed so that the lengths overlap a minimum of 50mm. Ensure that the placement of the rebar is adequate to reinforce the concrete structure, particularly at the bottom of the ductbank.
- A minimum of 50mm of concrete cover must be provided for direct buried installations (75mm is preferred). Depending upon the location, additional structural protection may be required to accommodate additional structural loads. This requirement should be coordinated with the structural design consultant.
- The concrete strength must be at least 20 MPa @ 28 days. Type 50 cement must be utilized if the geotechnical report indicates that the adjacent soils contain sulfates.

Refer to Chapter 8 Communications & Control, Section 8.10.2 and Figure 8.11 for additional duct bank/vault details.

11.13.1.2 Catenary Power

- Catenary power ducts distribute the positive and negative traction power cables from the TPSS to the overhead catenary and rails.
- They are constructed of 103mm PVC DB2 ducts, concrete encased and sloped a minimum of 1 to 250 towards pullboxes or manholes for drainage (refer to Figure 11.2).
- Pullboxes or manholes should be installed as required, to limit any section of duct to a preferred maximum spacing of 120m. Cable pulling eyes must be provided at all pullboxes and manholes.
- Catenary power ducts/vaults and pullboxes must be sized to take a maximum 1000 mcm cable.
- Each duct run must not exceed a maximum of an equivalent of 3-90 degree bends.
- Ducts are to be routed with a preferred 3000mm clearance from the centreline of the tracks. They must not be routed within 1500mm of the center of track in parallel under the LRT rails.
- Any traction power ducts crossing the rails must be installed at 90 degrees to the tracks.
- Spare ducts are to be provided as per the ETS Overhead TP Manual Section 2.18.
- All 90 degree bends must have a minimum bending radius of 1000mm.
- Ball ends to be provided at vaults, pullboxes and in TPSS trenches.

11.13.1.3 ROW Power

Ductbanks are required to house conduit/cable providing electrical feed to the many devices located along the trackway, e.g. snow blowers, switch machines, etc.

- For mainline ductbanks, the acceptable configurations are 2 – mmC or 4 mmC ducts, subject to load determination (refer to Figure 11.2).
- Maximum allowable vault/pullbox spacing is 400 m.

11.13.1.4 High Voltage AC Power

For high voltage AC feeders, conduits should be made of DB2 or galvanized steel [if there is a need to mitigate the effects of electromagnetic interference (EMI)] as required by the Utility Service Provider. The conductors must be separated from other systems.

- Utility high voltage AC conduits should have a minimum-bending radius of 1000mm.
- Utility cables must be installed in a reinforced concrete encased ductbank. Thin wall PVC (DB2) and/or rigid PVC must be utilizied when encased in concrete.
- Utility cable vaults and pull pits must comply with the Utility Service Provider standards.

11.13.2 Ductbank Construction General Requirements

11.13.2.1 Depth and Clearances

A recommended average cover depth of 650 mm below grade should be provided for LRT ductbank installations to prevent damage under load conditions. This depth can be varied to suit field conditions. The duct systems must be encased in concrete. Refer to Figures 11.1, 11.2, and 11.3 for suggested ductbank configuration.

The preferred minimum allowable clearance distance from the centreline of the ductbank to the centreline of track is 3000 mm. Adequate clearance is required in order that service personnel can access vaults in safety. The provision of this clearance will depend to a large extent, upon routing constraints such as available real estate and other competing systems such as drainage. Coordination is required with other interfacing Design Consultants and ETS to determine best fit solutions for the routing of each ductbank.

11.13.2.2 Cable Vaults and Pullbox Spacing

The structures that are required for accessing the ductbank to allow for the pulling of cable are referred to as cable vaults and pullboxes. They are to be installed at specified intervals along the ductbank.

Cable vaults and pullboxes can vary in size. Cable vaults for the communication system duct bank and for the Catenary duct bank to be as a minimum equal to the LaFarge A type vault, product number 1120. The cable vault to have a drain complete with backflow preventer. The cable vault lid is to be made of light weight aluminium equal to products manufactured by USF fabrication. The cable vault lid to have a slam lock and 90º hold open arms. Refer to Figure 11.3 for details.

Pullboxes must be constructed of concrete complete with a high impact lid. An identification label must be provided on the lid. Refer to Figure 11.4 for typical pullbox details. An identification schedule must be prepared for review and approval by ETS prior to issuing construction drawings.

11.13.2.3 Drainage

All ductbanks must be gravity-drained towards cable vaults and pull-boxes.

As much as practical, low spots in the ductbanks must not be allowed to develop. It is preferable that all cable-vaults and pullboxes drain to an adjacent subdrain system (i.e. catch basin leads, track drains). Integral dry well systems are acceptable only if the surrounding terrain has good drainage and drainage to subdrains is not feasible.

Sump pumps are to be installed in manholes located in tunnels or grade separations as required if they cannot be drained into a subdrain system.

11.13.2.4 Branch Ducts

It is preferred that concrete encased branch ducts for stub points and branch lines be constructed with the main duct system, where possible. All conduits crossing a roadway are to be encased in concrete and at a depth where damage to the conduits will not occur.

11.13.2.5 Cable Pulling

The pulling tension recommended by the cable manufacturers must not be exceeded when pulling cables. Therefore, the number of bends in the ductbank should be minimized to reduce cable-pulling tension.

11.13.2.6 Identification of Ducts, Cable Vaults and Pullboxes

Schedules must be prepared and submitted to ETS for review.

11.13.3 Conduits and Raceways Additional Requirements

11.13.3.1 Sealing of Conduit

All conduits entering or leaving a building below grade must be designed to drain away from the building and the equipment contained therein. Channelling the water towards the equipment is not permitted.

Alternatively, all conduits entering a building must be sealed by an approved sealer.

11.13.3.2 Fastening Devices

All electrical equipment and systems are to be fastened with flush mount internal threaded metallic anchoring systems designed for the specific application.

Plastic, wood or malleable metal inserts and shot driven pins and fasteners for securing electrical conduit or equipment are not permitted.

Note: It is difficult to control the quality of shot driven fasteners. They are not able to withstand continual vibration inherent in transit facilities.

Multiple conduit runs must be rack mounted on Unistrut or equivalent mounting equipment with the provision of a minimum of 25% spare rack space.

11.13.3.3 Conduits within Tunnels/Stations

All conduit and associated boxes within tunnels and/or stations on exterior walls should be mounted a minimum of 25 mm from the wall. Nylon spacers are permitted to be mounted on the wall allowing for electrical equipment to be supported from these spacers.

11.13.3.4 Conduits in Slabs

All conduits located in slabs between levels where coring may be required in the future must be located and dimensioned ±50 mm on the plan of record drawings.

11.13.3.5 Empty Conduits

Empty conduit systems should be provided for traction power system, signals, communications, antennae, telephone, CCTV and BMS. Conduits are to be swabbed clean and must have an adequate number of nylon pull cords installed.

11.13.3.6 Raceways

Rigid galvanized steel conduit must be used in all exposed raceway installations, and in tunnels.

PVC or DB2 conduit may be used within concrete or PVC when located below grade. PVC conduit emerging from grade or from concrete and routing on the surface must be converted to rigid steel. The transition from PVC to rigid steel to be done with a coupling that is then covered in a heat shrink sleeve and taped. The transition must take place before emerging from grade or from concrete. PVC conduit emerging from grade but routing directly into an enclosure does not require transitioning to rigid steel conduit.

EMT conduit should be used as the principle raceway within the TPSS. No plastic pipe is to be used within the TPSS. Plastic pipe emerging within the TPSS is to be converted to either rigid steel or EMT. Metal conduit must be bonded to ground using the correct sized bonding cable for protection.

All conduits in raceway installations should be provided with supports not more than 3 m apart from each other. The supports used in raceway installations can either be clamps for wall-mounted conduits, or trapeze-type racks.

11.13.3.7 Expansion Joints

Conduits that are prone to the effects of expansion (e.g. at bridge abutments) must be fitted with expansion joints. Conduits that may experience both horizontal and vertical movement must be provided with deflection fittings. The Consultant is to accommodate all conduits that are routed to or through fixed structures, which will, due to temperature fluctuations and the seasonal freeze thaw cycles, have different coefficients of expansion and contraction.

11.13.3.8 Duct Cleaning and Testing

Cleaning

Ducts must be thoroughly cleaned by the Installer before testing is carried out. After cleaning a pull rope must be left with a minimum of 1.0 m of tail protruding from the end of the duct at each vault and/or pullbox.

Testing

Mandrel testing of the ducts is required to ensure the successful installation and longevity of the cables that will be installed. The duct installer must prepare a procedure for review and approval by the City prior to the commencement of duct installation.

11.14 UTILITY SERVICES COORDINATION REQUIREMENTS

11.14.1 General

Service voltage must be confirmed with the Utility Service Provider.

High voltage (greater than 750V) service equipment is preferred to be owned, maintained and operated by the utility company. This arrangement is to be followed whenever possible and any variance to this arrangement to be done in consultation with ETS. Refer to 11.14.2 for exception.

Rules of “Underground Services – General” must apply to all high potential installations.

All service cables or conductors to the main power utility transformer may be supplied and installed by the Utility Service Provider.

- The details of all high potential services must be approved in the Utility Service Provider prior to commencement of construction of service lines.
- The Consultant should refer to the Utility Service Provider’s Customer Connection Guide for details and contact the Utility Service Provider directly if clarification of the service details is required.
- The electrical contractor must obtain approval from the Utility Service Provider for each underground service entrance application.

11.14.2 Exceptions

The following process is to be followed when EPCOR does not supply the primary switchgear and protective relays.

- EPCOR must specify the protection coordination with a 15 kV or 4.16 kV feeder.
- EPCOR must examine and confirm the available fault current.
- EPCOR is willing, if requested, to provide the initial relay calibration and trip checks, to confirm the operational readiness of the protection.
- Unless requested otherwise, EPCOR will not be responsible for carrying out the required annual or bi-annual relay maintenance. All maintenance work is carried out by the City of Edmonton’s own forces or contracted agencies.
- EPCOR is willing, if requested, to enter into contractual agreements to conduct annual maintenance on protective relays owned by others.

11.15 TESTING AND COMMISSIONING

Testing and commissioning is to be carried out in accordance with the overall commissioning plan and program (refer to Chapter 1 General, Section 1.6).

11.16 STANDARD RECORD DOCUMENTS

For standard record documentation requirements refer to Chapter 1 General, Section 1.7 and Appendix 1.

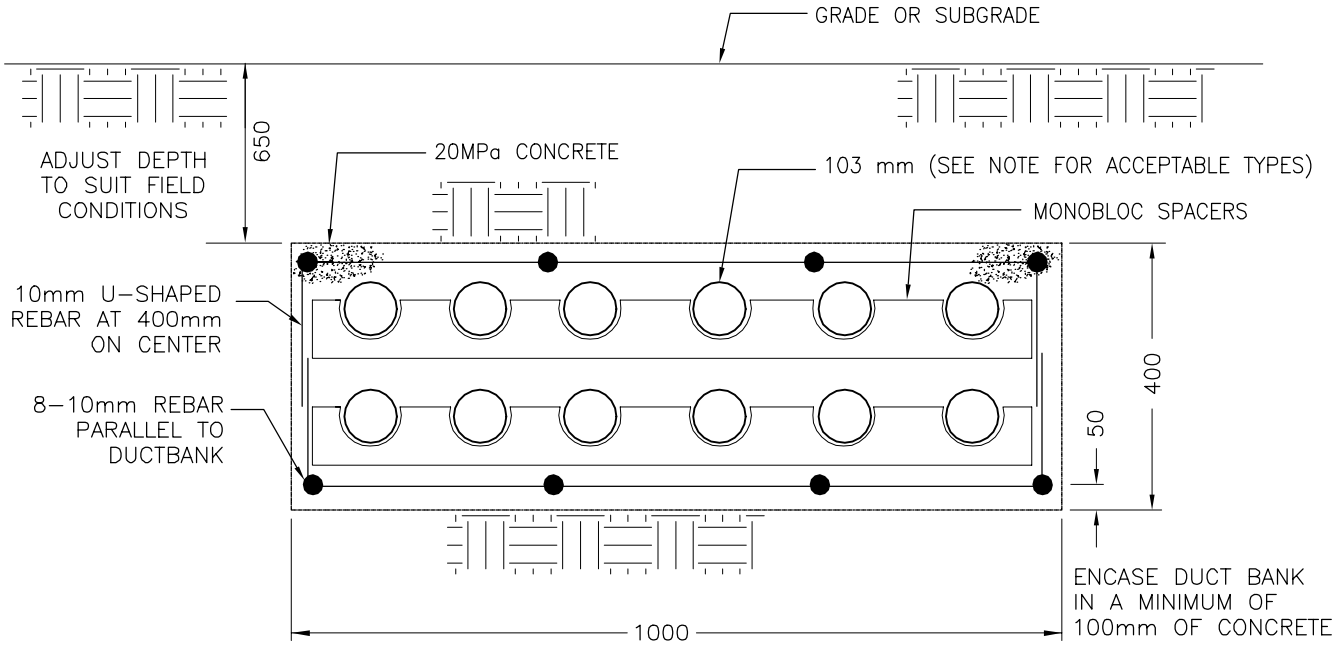

12 CONDUIT TWO ROW DUCT BANK

NOTE: THE FOLLOWING CONDUITS ARE ACCEPTABLE, (DEPENDING ON CONDITIONS)

- PVC SCHEDULE 40
- PVC SCHEDULE 80
- HDPE SCHEDULE 40
- HPDE SCHEDULE 80

		FIGURE 11.1	CHAPTER 11
		TYPICAL COMMUNICATIONS DUCTBANK	ELECTRICAL SYSTEMS
04-JUL-11	CONDUIT TYPES		
Date	Revision		

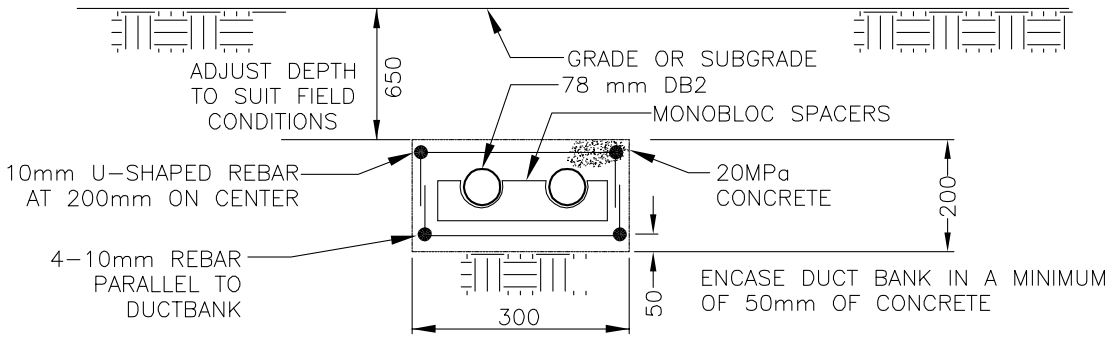

1X2 78mm POWERCABLES DUCTBANK

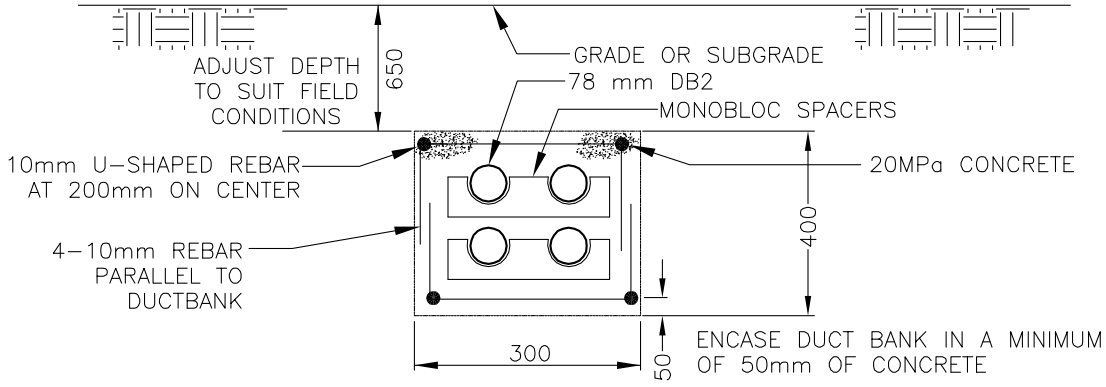

2X2 78mm POWERCABLES DUCTBANK

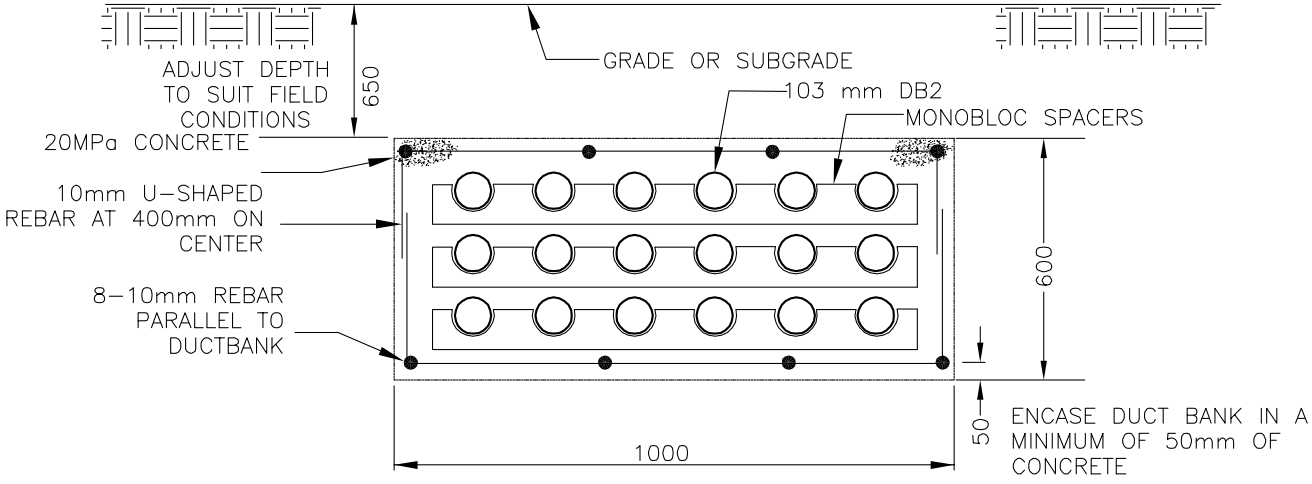

18 CONDUIT THREE ROW CATENARY DUCT BANK

		FIGURE 11.2 TYPICAL POWER AND CATENARY DUCTBANK	CHAPTER 11 ELECTRICAL SYSTEMS
Date	Revision		

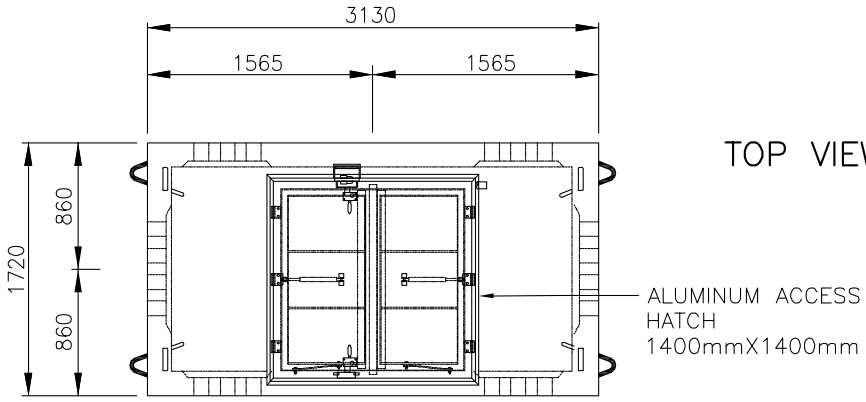

TOP VIEW OF VAULT

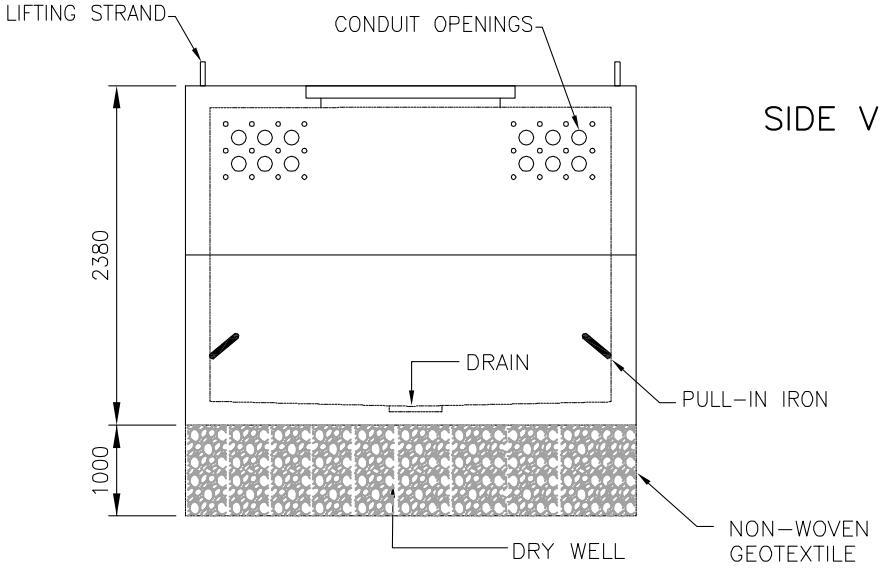

SIDE VIEW OF VAULT

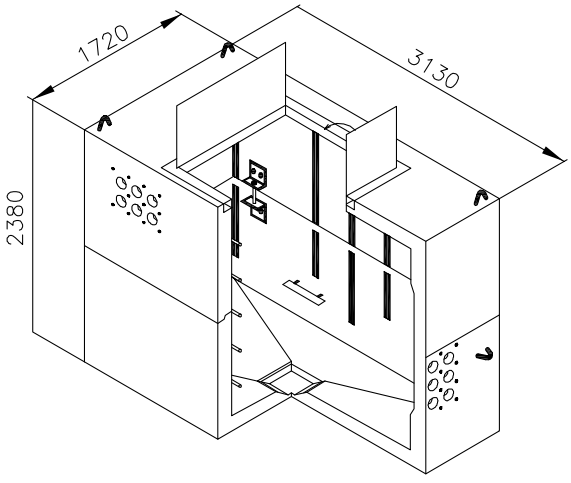

OVERALL DIMENSIONS

		FIGURE 11.3 VAULT DETAIL	CHAPTER 11 ELECTRICAL SYSTEMS
Date	Revision		

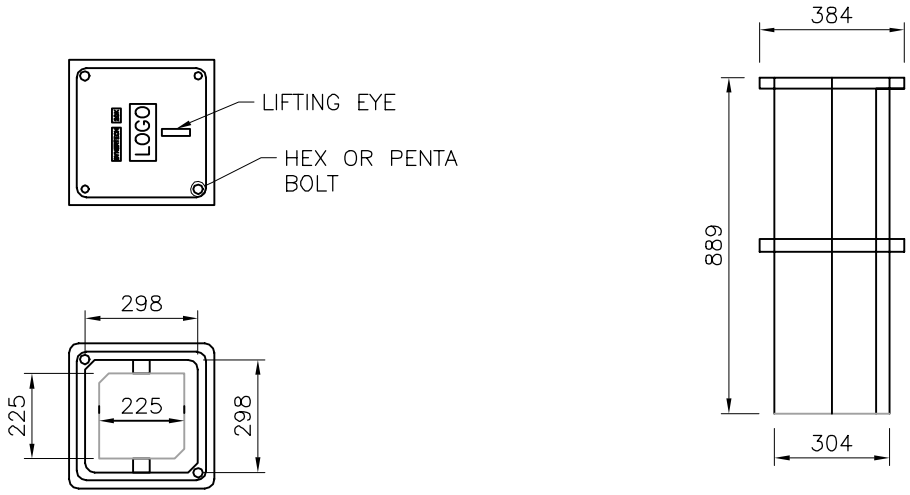

PULL BOX 12 X 12 X 36
(SYNERTECH)

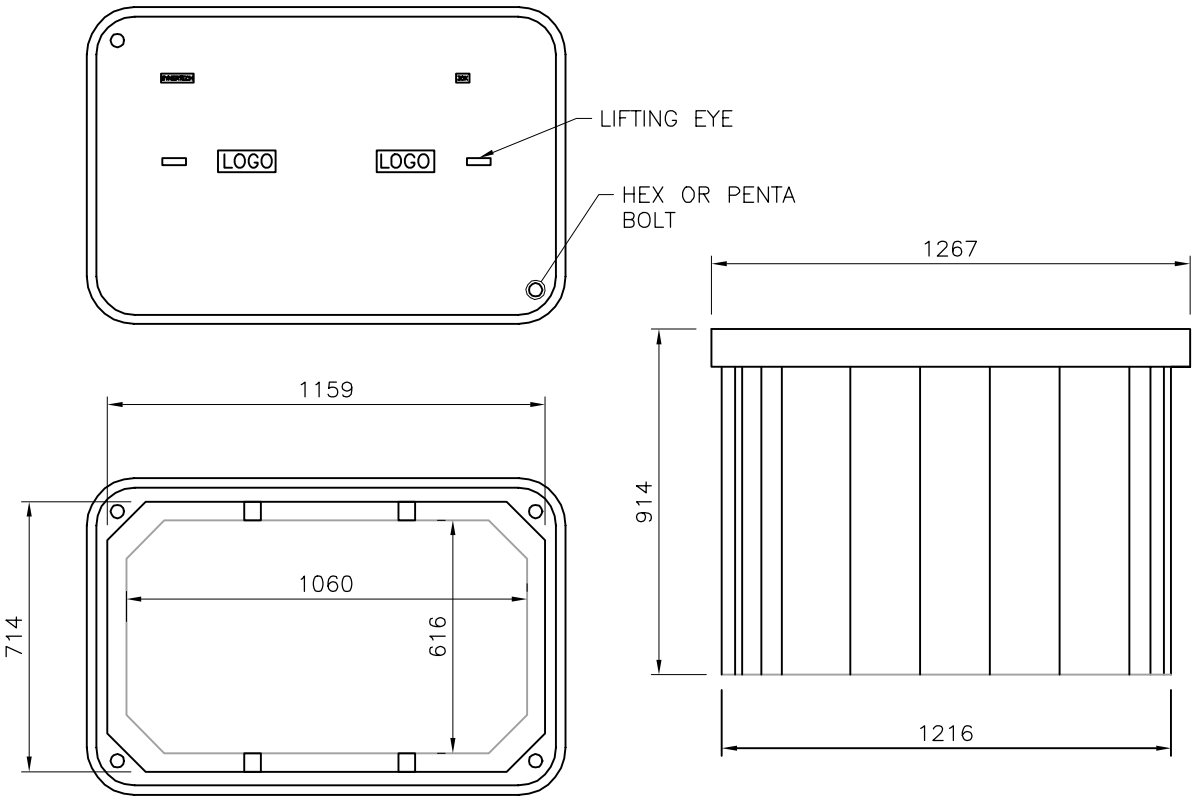

PULL BOX 30 X 48 X 36
(SYNERTECH)

NOTE: OTHER SIZES AVAILABLE.
(DEPENDING ON APPLICATION)

		FIGURE 11.4	CHAPTER 11
		TYPICAL PULLBOXES	ELECTRICAL SYSTEMS
4-JUL-11	NEW PULL BOXES		
Date	Revision		

LRT DESIGN GUIDELINES

Chapter 12

2017 EDITION – Revisions Tracking Form

Section	Reference	Revision General Description	Issue Date
12.2	Last paragr.	Added requirement for consultant to develop spare parts list.	July 2017
12.3.3.1	Last bullet	Added requirement for access to pumps.	
12.6.1	3rd paragr.	Clarified crawl space ventilation requirements.	
12.6.2	2nd paragr.	Added requirement for consultant to consider alternate room uses in ventilation design.	
12.6.2	Table	Added Type II & III shelters and crawl space.	
12.7.4	Last paragr.	Updated reference.	

12.0 MECHANICAL SYSTEMS

		Page
12.1	GENERAL	1
12.1.1	Introduction	1
12.1.2	Applicable Codes, Regulations and Standards and Reference Guidelines	1
12.1.3	Definitions	1
12.2	GENERAL DESIGN GUIDELINES	1
12.3	MECHANICAL SYSTEM COMPONENTS	2
12.3.1	Piping Systems	2
12.3.2	Other Insulation Requirements	7
12.3.3	Equipment	7
12.3.4	Vacuum System	9
12.3.5	Plumbing Fixtures and Trim	10
12.4	FIRE PROTECTION SYSTEMS	10
12.4.1	General	10
12.4.2	Standpipe Fire Hose Systems	11
12.4.3	Sprinkler System	12
12.4.4	Fire Extinguishers	12
12.5	HEATING	13
12.6	VENTILATION & SMOKE CONTROL	13
12.6.1	General	13
12.6.2	Ventilation and Heating Criteria	14
12.6.3	Ventilation Equipment	15
12.6.4	Alarms and Controls	16
12.6.5	Metering (Water and Gas)	16
12.7	DRAINAGE	16
12.7.1	General	16
12.7.2	Design Criteria	17
12.7.3	Drains	18
12.7.4	Pumping Stations	18
12.8	COMMISSIONING AND TESTING	18
12.9	PREVENTATIVE MAINTENANCE	18
12.10	MECHANICAL SYSTEMS STANDARD DOCUMENTATION REQUIREMENTS	19

12.0 MECHANICAL SYSTEMS

12.1 GENERAL

12.1.1 Introduction

This chapter outlines the design guidelines for the mechanical infrastructure components and elements for LRT structures and facilities including tunnels, underground and surface LRT stations and open right-of-way. The topics in order of presentation are as follows:

- Mechanical systems components including piping and equipment
- Fire protection measures including fire hose and sprinkler systems
- Heating
- Ventilation
- Controls
- Drainage

Post construction standard documentation requirements are addressed in detail in Chapter 1 General, Section 1.7.

12.1.2 Applicable Codes, Regulations and Standards and Reference Guidelines

Unless stated otherwise, all material and equipment selection must conform to, or exceed the requirements of the latest editions of all applicable federal, provincial and municipal codes and regulations. Consideration should also be given to pending code changes and adoption of new code standards.

ABC	-	Alberta Building Code
ASCA	-	Alberta Safety Code Act
AWWA	-	American Water Works Association
CGC	-	Canadian Gas Code
CPC	-	Canadian Plumbing Code
NBC	-	National Building Code of Canada
NFPA	-	National Fire Protection Association including NFPA 130 Standard for Fixed Guideway Transit and Passenger Rail Systems
OHSA	-	Occupational health and Safety Act

12.1.3 Definitions

Water distribution is defined as the conveyance of water from the water service provider to LRT stations, buildings and other related consumption and service points.

Waste return is the collection and conveyance of storm drainage from LRT facilities and the LRT right-of-way to the public storm sewer system and sanitary sewage from LRT stations, buildings, underground structures and tunnel(s) to the public sanitary sewer system.

12.2 GENERAL DESIGN GUIDELINES

All plumbing and drainage systems should be designed to meet the following functional requirements:

- Piping in station and ancillary areas should be run as directly as possible (i.e. run parallel to, and at right angles, to walls and partitions). Multiple pipes should be grouped in parallel lines. Where required, sleeves should be provided in structure walls to allow for future piping.
- The domestic water service connection to each facility should be sized to meet the project total peak demand. Each service must have a main shut-off valve and a backflow preventer.

A stainless steel water service connection is acceptable.

- Insulation and heat tracing must be installed on all piping subject to freezing. Refer to Section 12.3.1.8 and Chapter 11 Electrical Systems, Section 11.8 Electrical Heat Trace Systems.
- A capped drain valve complete with low point connect [1500 mm above finished floor (AFF)] must be provided to facilitate easy drain ability in the event of an emergency.
- The provision of unimpeded access to piping and equipment for maintenance purposes or its removal or replacement must be considered in the design.
- The interfacing aspects of the plumbing, drainage and fire protection systems must be in accordance with the specified criteria.
- Mechanical material and equipment should be selected based on the following considerations:
  - High level of usage, long life expectancy and low maintenance.
  - Able to perform satisfactorily within a – 40 to +40 °C temperature range.
  - Equipment located in public areas must have suitable protection to minimize damage from vandalism.

All drainage systems must be designed to meet the requirements of the City of Edmonton Infrastructure Services Department, Drainage Branch.

During the design, the consultant should determine a spares list for each component, and discuss with ETS for agreement.

12.3 MECHANICAL SYSTEM COMPONENTS

12.3.1 Piping Systems

12.3.1.1 General

All piping systems must be designed and arranged for neat appearance, properly sloped for drainage and venting, properly supported, guided, and anchored to provide complete flexibility. During any extreme operating condition, the integrity of all systems should be maintained without any damage or leaks.

Corrosion protection measures must be a consideration in design.

12.3.1.2 Pipe Routing

Piping configuration and routing, through the use of flanges or unions, must be designed in such a manner so that piping does not have to be removed if the equipment is replaced.

Drainage piping must not be routed through communication, electrical or signal rooms. Adequate clearance must be provided from catenary power installations (refer to Chapter 3 Clearances and Right-of-Way and Chapter 6 Traction Power).

12.3.1.3 Rough-In

For stations and buildings that may be constructed in stages or by multiple contracts, sleeves and block-outs must be provided in the earlier stage contract to accommodate plumbing and fire protection equipment, plumbing fixtures and piping installations by the later stage contractors. The location and sizes of sleeves and block-outs must be accurately dimensioned on the structural drawings.

12.3.1.4 Hangers and Supports

Wherever possible, pipe hangers and supports should be anchored to reinforced concrete slabs or beams utilizing drilled in steel inserts.

The location of all supports and hangers anchored into concrete decks and slabs must be coordinated with the structural design consultant.

The location of all supports or hangers anchored to the steel roof decking must be coordinated with the facility prime consultant.

12.3.1.5 Sleeves

Sleeves must be large enough for movement and the provision of continuous insulation.

The location of sleeves through concrete decks and walls are to be coordinated with the structural consultant and the facility prime consultant.

12.3.1.6 Seals

Modular mechanical type seals must be used on penetrations through mechanical room walls/floors/ceilings and through foundation walls to inside space.

Pipe bridges on building services must be used where services penetrate foundation walls and more than 1 m in width of fill is to be provided around the foundation.

12.3.1.7 Soil and Waste

Plastic may be used on approved application for all services, including below ground and the building interior. Building interior plastic piping systems must be rated for such applications.

Lines requiring heat tracing must be steel or cast iron or approved PVC piping systems. Heat traced lines must be insulated and aluminum clad.

Aluminum or galvanized material must not be used as piping.

Invert elevations must be checked for sewer connections to confirm that a sufficient gradient for drainage and adequate depth of cover is provided to avoid freezing. Ensure coordination with the geotechnical report findings/recommendations.

Cleanout and service access points must be full size and be located in accessible areas. If direct access is not available, provide cleanouts and service points by installing long sweep fittings (Y fittings not T fittings).

12.3.1.8 Heat Tracing/Insulation

Pipe and pipe fittings that are subject to freezing must be heat traced. Heat traced piping must also be insulated and aluminum clad. Heat tracing must be carefully installed to ensure that mechanical fitting and soft-seated valves are not in direct contact with the heat tape.

In addition, the following must be provided:

- Labels at 10 m intervals indicating “Caution Heat Tracing”.
- Installed with a minimum 0.5% gradient to ensure drainability.
- Low point drains (1500 mm AFF), complete with chained screw caps, for easy draining in the event of an emergency.

Heat tracing is monitored and controlled by the BMS. Refer to Chapter 8 Communications and Control, Section 8.3.5.16.

12.3.1.9 Wet/Dry Vacuum Piping

The vacuum system piping should be specialty rated for the application. Rigid galvanized steel piping i(2-1/8"OD 11ga.) tubing is preferred.

Outlets are to be located at 20 m intervals under both sides the station platform and 350 mm back from the platform edge (refer to Chapter 10 Stations and Ancillary Facilities, Section 10.4.1.10). An outlet should be provided in the central fan room (Type I stations) for cleaning of fan chamber.

Clean out plugs are to be provided at the ends of horizontal mains and branches.

Main vacuum lines (i.e. headers) that provide connection to station outlets must run parallel to the track under the cantilevered part of the platform in the refuge area (refer to Figure 12.1). Headers must be installed on the outside of the station bearing wall fixed to the underside of the station platform. They must have only one point of entry into the station building on each side. For ease of future maintenance, vacuum lines should not be installed within confined space areas or crawl spaces.

The vacuum lines must be designed to minimize abrasive wear of the pipes and fittings. Accordingly, 90° short elbows or TY's with short radii must not be used. When designing 90° directional changes, long radius elbows and TY's with a 45° offset in the direction of flow must be utilized with the maximum T radius practicable. This applies to locations along the headers that connect to outlets and locations that breech into the station's interior.

Cleanouts must be supplied at both ends of vacuum line headers.

Refer to Section 12.3.4 for the central vacuum system guidelines.

12.3.1.10 Valves

All isolation valves must be located in accessible locations, away from high voltage lines or equipment.

Hand-wheel gear operated valves must be used on all fire-line isolation applications and be ULC approved.

The accepted practice is to provide a fire alarm system within the station area but not within underground tunnels. Therefore, supervised devices should be provided in station areas and chains with locks for all tunnel sections.

Fire-line hand wheel gear operated valves are required to be locked in the open position. Locks are to be provided by ETS. If chain is required to lock the valves open, the chain should be provided under the Mechanical Division 15 contract.

In a propylene glycol charged sprinkler system or wherever other systems are tied into the domestic supply lines, an appropriate reduced pressure back-flow device must be installed as approved by the AHJ.

It is preferred that a zonal system be established for each level of a station (a minimum of two zones per level) in order that the entire system need not to be drained when localized maintenance or systems changes are required.

Isolation valves and unions are to be provided, as required, to isolate equipment, so that *entire systems do not have to be drained to remove failed components.

***Note:** It is preferred that two (2) zones per floor be provided.

In the event of an over pressure condition discharge, collection barrels for the pressure relief valves (minimum barrel size 205 L (45 imp gal.) are to be provided.

12.3.1.11 Piping Identification

Exposed piping must be painted/designated in accordance with applicable codes and City of Edmonton standards as presented in the following Tables 12.1 and 12.2. The mechanical design consultant must forward the painting requirements to the Project Office for review and approval prior to specification development.

Primary Colours for Pipe Lines		
1.	Yellow	#505-102
2.	Light Blue	#502-106
3.	Green	#503-107
4.	Orange	#508-102
5.	Brown	#504-103
6.	Red	#509-105
7.	White	#513-101
8.	Aluminum	#515-101
9.	Purple	#511-101
10.	Grey	#501-107
Secondary Colours for Band		
1.	Red	#509-102
2.	Orange	#508-102
3.	Blue	#502-106
Banding		
1.	Red	- to indicate extremely hazardous material
2.	Orange	- to indicate mildly hazardous material
3.	Blue	- to indicate non-hazardous material

Note: Colour numbers used are as designated in Canadian Government Specification No. 1-GP-12C.

Table 12.1 – Piping Colour Codes

Type	**Pipe Colour**	**Band Colour**	**Symbol**
Sprinkler	Red	None	
Wet Stand Pipe	Red	None	
Dry Stand Pipe	Red	None	
Carbon Dioxide (Fire)	Red	None	CO_2
Oxygen	Orange		O_2
Natural Gas	Orange		Natural Gas
Vacuum	Aluminum	Blue	Vac.
Compressed Air	White	None	7 psi Air
Distilled Water	Green	Blue	Dist. Water
Drinking Water	Light Blue	None	None
Domestic Cold Water	Light Blue	None	Cold Water
Domestic Hot Water	Green	Orange (140-250ºF)	Hot Water
Domestic Hot Water Return	Green	Blue (Below 140ºF)	Hot Wtr.R.
Heating Hot Water	Yellow	Red (Over 250ºF)	200ºFF Heat. Water

Type	Pipe Colour	Band Colour	Symbol
Heating Hot Water Return	Yellow	Orange (Under 250ºF)	200ºF Heat. Water R.
Chilled Water	Green	Orange	Ch. Wat.
Chilled Water Return	Green	Orange	Ch. Wat. R.
Cooling Water	Green	Orange	Cool. Water
Cooling Water Return	Green	Orange	Cool. Water Return
Low Pressure Steam	Yellow	Orange	15 psi St.
High Pressure Steam	Yellow	Red	100 psi St.
Condensate	Green	Orange	Cond.
Dry Mop	Aluminum	None	Dry Mop
Fuel Oil	Brown	Orange	Fuel Oil
Freon-Liquid	Grey	Blue	Freon
Freon-Gas	Grey	Blue	Freon
Lubricating Oil	Brown	Blue	Lub. Oil
Engine Exhaust	Aluminum	Orange	Exhaust
Boiler Feed Water	Green	Red if over 250ºF Orange under 250ºF	Blr. Feed
Strong Acid	Purple	Red	Acid
Strong Caustic	Purple	Red	Caustic
Glycol	Green	Orange	Glycol
Nitrogen	Orange	Blue	N^2
Brine	Green	Blue	Brine
Demineralized Water	Green	Blue	Demin. Wtr.
Softened Water	Blue	None	Soft. Water
Chemical Feed Line	Green	Orange	Chem. Sym (SO_3)
Drains	Aluminum	Red or Orange	Drain
Vent	Aluminum	Red or Orange	Vent
Blow Down	Aluminum	Red or Orange	Blow Down
Ammonia	Grey	Orange	Ammonia
Carbon Dioxide (Ref.)	Grey	Blue	CO_2

Table 12.2 - Application of Colour Codes to Type of Piping

12.3.2 Other Insulation Requirements

Piping insulation requirements are provided in Section 12.3.1.8. The following insulation guidelines relate to other mechanical elements.

All intake, supply, exhaust ductwork must be insulated in accordance with the following requirements:

- Supply ductwork must be acoustically lined with a minimum of 25 mm acoustical insulation.
- Exhaust ductwork on the return side of ventilating equipment is to be acoustically insulated up to and including the first elbow before the unit.
- Casings of all ventilating equipment are to be insulated.
- Major equipment is to be internally protected with perforated aluminum liners.
- Exhausted ducts within 3 m of exterior walls or openings to have 50 mm thermal insulation.
- Outdoor air intake ducts within 3 m of exterior walls or openings must have 50 mm thermal insulation.
- Ductwork exposed to the outdoors must have 50 mm thermal insulation c/w aluminum cladding.

To meet environmental and/or ambient criteria, acoustical insulation will be installed as per the recommendations from a review conducted by an acoustical consultant.

12.3.3 Equipment

12.3.3.1 Pumps

Where pumps are provided, the following requirements should be met:

- Each pump should be capable of handling 100% of system flow at peak condition for sumps.
- Lifting systems containing tackle and hooks must be provided above the pumps to facilitate the easy removal of the pumps for maintenance purposes.
- No piping, conduits, drains or any other obstructions are to be mounted above the pumps that would impede their easy removal.
- Provision for pit cleaning must be incorporated into the design. The preferred access size is 1000 mm.
- Pump controllers monitored by the BMS.
- Provide easy access to pumps for maintenance purpose.

A 100% stand-by pump must be provided for all pumping applications.

12.3.3.2 Generators

Permanent generators have been installed in Type I stations to provide emergency power in the event of a power failure. The requirement for generators in Type II stations on future extensions to the LRT System will be determined on a station to station basis. In general permanent generators will not be installed in Type II and III stations. The generator size and requirements for ventilation and fuel oil requirements must be reviewed with the electrical consultant.

The following requirements should be considered when specifying generators:

- Ventilation must incorporate exhaust air dampers, return air dampers, outdoor air intake dampers and a minimum combustion air damper. Exhaust, return and outdoor air dampers to modulate as controlled by a space temperature sensor.
- Residential areas require a detailed review for noise control. Muffler systems must be able to meet the noise levels restrictions required by the surrounding neighborhood.

- Install vibration isolators on the muffler piping and spring isolators on the hangers for the exhaust pipe to accommodate vibration and expansion and contraction.

Refer to Chapter 11 Electrical Systems, Sections 11.7.3 and 11.7.4 for additional generator guidelines.

12.3.3.3 Domestic Water Heaters

Hot water is to be supplied by standard commercial grade domestic hot water heaters at locations to be determined by ETS. In general, the locations are limited to washrooms and custodial service rooms.

The following features/installations are required:

- The provision of a fire proof drip tray and self-contained shut down device for the water and power to the heater. The self-contained shut down device is to be mounted in the drip tray.
- The provision of easy access for replacement.
- The provision of floor drains in close proximity to the hot water heater to accommodate drainage from pressure relief valves.
- Electric domestic hot water heaters must meet the requirements of CSA C22-110 and CSA C191

12.3.3.4 Backflow Preventers

Backflow preventers must be installed on potable water systems in LRT facilities in accordance with the following requirements:

- Be located maximum of 2 m above floor level to ensure that convenient access is provided.
- If reduced pressure principal backflow preventers are to be installed, a drain line to nearest funnel floor drain must be provided. The air gap funnel assembly must have anti splash components to prevent water spray in the event of a discharge (to prevent water build-up on floor and the creation of areas where slippage could occur).
- The device assembly must meet the AWWA requirements and CSA B64 standards. Types and location to be in accordance with codes, authorities having jurisdiction and AWWA guidelines.
- Backflow preventer assemblies must be tested and verified in accordance with the requirements of authorities having jurisdiction. Certification sheets for insertion into O & M manuals must be provided.

12.3.3.5 Equipment Bases

All major equipment items must be mounted on reinforced concrete housekeeping bases.

12.3.3.6 Access Doors

All concealed mechanical equipment requiring service or adjustment must be provided with access doors, of adequate size for the intended use and positioned for most accessible and safe work condition.

Mechanical system components must include:

- Valves
- Volume and splitter dampers
- Fire Dampers
- Cleanouts and traps
- Coils and terminal units
- Expansion joints

- Control components

Sizes to be 600 mm x 600 mm minimum.

Provide UL-listed fire rated access doors installed in rated walls and ceilings.

12.3.3.7 Equipment Identification

Identify all equipment excluding pipe and duct with mechanically fastened lamacoid plates having 6 mm minimum letter size. Identification must match as built drawings equipment name and number.

Identify electric starting switches, thermostats controlling motors, remote push button stations, and controls equipment supplies under this division with lamacoid plates having 6 mm (¼") minimum letter size. Identification to state equipment controlled and match to control shop drawing identification numbers.

All mechanical equipment, including valves, must have identification tags indicating the following:

- Equipment ID Number
- Electrical disconnect location
- Equipment use

12.3.4 Vacuum System

A central vacuum system must be provided in each station to facilitate the cleaning of the platform and adjacent trackway area.

To provide easy access for the track mounted equipment that will be handling the dust collection barrels, the vacuum system equipment components should be placed in a separate room that it is at track level or is accessible by elevator to the track level. The placement of electrical or communications equipment or panels in this room should be avoided due to the potential for dust spill-over.

The ceiling of the room should provide sufficient height to accommodate a hopper style tubular bag separator. The separator straddles one of the 205 liter dust collection barrels.

The floor area of the room should be adequate to allow for the servicing and maintenance of the equipment from all four sides including space for an extra collection barrel. If the provision of adequate access space is a space design issue, as an absolute minimum, access must be provided to at least two sides, subject to the manufacturer's verification.

The following devices must be provided as part of the vacuum system:

- HEPA filter system
- HEPA filter gauge – indicates when the filter requires changing.
- Electronic Monitoring Bleed Control (EMBC) – if an overload condition is created it will transmit a signal to the valve to allow more air in or it will turn off the system to protect the motor.
- The Circuit Transformer (CT) must be housed in a metal junction box separate from the vacuum starter.
- The CT and vacuum starter must be mounted with in the vicinity of the EMBC.
- Components, panels and breakers must be properly labeled.

Standard of Acceptance: Spencer Turbine Components including:
Tubular Bag Separator - Spencer TH 820 AA or equivalent
HEPA Filter System

12.3.5 Plumbing Fixtures and Trim

12.3.5.1 General

All plumbing fixtures must be low water consumption standard commercial grade (handicap models where required) and meet the following requirements:

- Water closets – elongated rim floor mounted, low flush type.
- Urinals - wall hung with low flush valves or automatic flush sensors.
- If water lines are not exposed, recessed flush valves are to be installed.
- Be vandal proof in washrooms that are accessible for public use.

12.3.5.2 Specific requirements

- New (CSA approved) fixtures to be provided
- Ensure fixtures are free from flaws and blemishes with finished surfaces clear, smooth and bright.
- Visible parts of fixture, brass and accessories must be heavily chrome plated
- Protect fixtures against use and damage during construction
- Fixtures must be the product of one manufacturer
- Fittings of same type must be the product of one manufacturer.

12.4 FIRE PROTECTION SYSTEMS

12.4.1 General

To meet the provisions of the building code, fire protection systems must be installed in LRT stations including service areas, tunnels, and Traction Power substations.

The design of the fire protection system must be approved by the City of Edmonton's Insurance Providers.

A manual has been prepared which provides a description of the fire protection systems utilized in the underground portion of Edmonton's LRT System. The existing underground LRT system is comprised of six (6) underground passenger stations and an adjoining network of connecting twin tunnels.

Any modifications or extensions to fire protection and tunnel emergency ventilation systems must be documented and updated in the ETS Fire Protection Manual.

As the LRT is extended, the Fire Protection Manual is to be updated by the Project Office as part of the extension Plan and Commissioning Program.

Three (3) copies of the updated manuals are to be provided to each of the following groups:

Emergency Response Department
ETS – Light Rail Transit (D.L. MacDonald Division)
ETS – Operations (Mitchell Division)

The Edmonton LRT system also has a number of Type II stations. As the LRT is extended, additional Type II and Type III stations will be added. The fire protection requirements for Type III stations will be reduced in scope as compared to Type II stations due to their more open and simple architectural style and features.

The main fire protection equipment utilized on the LRT system is listed as follows:

- Dry pipe sprinkler system
- Wet pipe sprinkler system
- Tunnel Fire Hose Cabinet Racks
- Station Fire Hose Cabinets

- Chemical Extinguishment Systems
- Portable Fire Extinguishers
- Fire Fighter Phones
- Fire Hydrants

12.4.2 Standpipe Fire Hose Systems

The fire hose system is split into two systems dependent on the location within the LRT facility. It is independent of the sprinkler system (if applicable).

A dry standpipe system is to be used in the underground tunnels. A propylene glycol charged wet system is to be used for the hose cabinets on the Type I station platform and mezzanine levels, where required.

Bonding jumpers are required on all mechanical grooved piping victaulic connections on piping systems in tunnel areas.

Fire hoses for all tunnel hose racks are to be supplied and installed by the sprinkler contractor with the approval of the Emergency Response Department.

12.4.2.1 Fire Hose Locations

<u>Stations</u>

Hose stations must be located on all station platforms. The hose stream must be able to reach all areas of each LRV while the train is stopped within the length of the platform.

Hose stations must be located in a hose cabinet containing hoses, fittings, and a portable fire extinguisher (if required).

Connections for the Emergency Response Department must be provided for all standpipe systems.

Hose stations must be installed behind break glass or locked glass panels to limit vandalism.

<u>Tunnels</u>

Hose stations and valves in tunnels are to be located no more than 1200 mm above TOR and are to be clear of the Design Vehicle Dynamic Envelope. Each hose station is to have a fluorescent orange cover.

They are to be split into valved standpipe sections. Should a break occur in the main line, that section of line could be valved off with the remaining stations being useable.

Each hose station is equipped with the following:

- Two (2) 15m (50 ft.) lengths of service attack hose. Each hose length has a diameter of 44 mm (1 ¾") complete with 38 mm (1 ¼") couplings. Hose must be double jacketed.
- The hose nozzle is to be City of Edmonton EMS standard fog and straight steam nozzle. The nozzle is constructed to have double row of molded rubber-like teeth as an integral of the bumper.

Standard of Acceptance:	Fire Hose Reel	- National Model V-8-1-1/2
	Fire Hose	- Angus "Fire Power"
	Hose Nozzle	- Angus GFAMKill Fog Nozzle
	Hose Valve	- National Model A56

12.4.2.2 Siamese Connections

The location of the Siamese connections will be determined by the mechanical design consultant and must be coordinated with the Emergency Response Department.

Siamese locations must have a lamicoid nameplate indicating the area being served and the Siamese connection number.

12.4.2.3 Temporary Standpipe

A temporary dry standpipe(s), on grade, must be provided if a station or tunnel construction impedes the Emergency Response Department access to existing hydrants or buildings.

The standpipe is to have a Siamese connection at each end and hose valve takeoffs as required by the Emergency Response Department. The system must be braced and anchored to prevent movement during use.

12.4.2.4 Valves

Check and isolation valves are required at each end of Tunnel Fire Hose Systems. Butterfly valves are a standard requirement.

Valve locations must be coordinated with the Emergency Response Department.

12.4.3 Sprinkler System

The sprinkler system within LRT stations should generally be the dry pipe type to avoid freezing problems. This system must be independent of the hose system.

The system must be braced and anchored to avoid damage to ceilings and other building elements, when activated.

Drain valves for the sprinkler system are to be located in easily accessible locations.

The contract must specify that suitable spare heads are to be provided.

Sprinkler systems used in signals and communications rooms should be the pre-action or water mist systems type.

Sprinkler systems must not to be installed in traction power substations. Protection is to be provided by acceptable gas systems or by designing adequate fire protection rating into the structure accompanied by the installation of appropriate fire protection devices.

12.4.4 Fire Extinguishers

Equipment and installation must meet the requirements of NFPA No. 10 Portable Fire Extinguishers.

Select fire extinguishers that are applicable, based on the type of fire expected:

- Class A – wood, paper, cloth etc.
- Class B – flammable liquid or combustible liquid, fat or grease.
- Class C – energized electrical equipment.

Classification of hazard may be found in NFPA 10, 1-5. Additional extinguishers may be required adjacent to welding operations, where combustibles are stored, near internal-combustion engines, adjacent to flammable liquids storage and handling.

Space extinguishers based on their hazard and rating using Alberta Fire Code Table 6.2.3.3 and Table 6.2.3.5.

12.5 HEATING

Heating systems are required in specified areas or rooms of stations for passenger comfort or to meet personnel and equipment functional requirements. Refer to the table contained in Section 12.6.2 for the areas to be heated and the level of heating to be provided.

Both overhead electric infrared, gas infrared heaters or gas fired furnaces are acceptable installations subject to the conditions stated in Chapter 10 Stations and Ancillary Facilities, Section 10.4.3. Baseboard heating units being considered for public areas must be proven to be safe and vandal-proof. Shelter heating, if the halogen type, must be controlled by occupancy sensors.

Heating systems must conform to the regulations of the Alberta Building Code and all other applicable codes in force or pending.

12.6 VENTILATION & SMOKE CONTROL

12.6.1 General

The two major types of ventilation systems that are in existence within Edmonton's underground tunnel and station system are:

- Base tunnel and underground (Type I) stations ventilation system.

  The objective of this system is to provide an acceptable level of environmental quality for LRT passengers and service personnel carrying out their responsibilities in these areas.

  Heating at portals may also be required where the stack effect is a concern and freezing conditions may result in damage to LRT structures and equipment. Each location must be evaluated on an individual basis.

- Emergency tunnel and station ventilation system.

  This system must be capable of handling emergency situations such as a fire in a tunnel or station.

Ventilation systems for surface (Type II and III) stations are not normally required except for specified service rooms that form part of the station.

Air conditioning in LRT facilities is not normally provided except in special situations to deal with high heat levels generated by certain equipment. Air conditioning may be provided within service rooms housing UPS systems to maintain the room temperature below 25°C. The power supply for the cooling system for the communication room, signal room, and main electrical room must be provided by the emergency generator. Ventilation in crawl spaces must be equipped with switches which allow fresh air fans to operate on a timer of up to one hour.

The ventilation of the tunnel systems is achieved by three methods:

- The "piston" effect action of the LRV's moving through the tunnels. The piston effect will provide the ventilation under normal conditions. Blockage ratio, impedance, and the speed of the train will be utilized in the design of this ventilation.
- The forced air fan smoke removal systems.
- The *natural stack effect.

***Note:** The design of the underground ventilation system must always consider the natural stack effect, which is dependent on the exterior air temperature and the temperature inside the tunnels.

Emergency ventilation of underground stations is primarily achieved by the forced air fan smoke removal system.

Ground level access locations must have the provision to prevent the premature closure of doors when trains enter and leave the station, which could cause injury to LRT patrons.

Dampers and fans that are designated to respond to emergency conditions are automatically controlled from the ETS Control Centre at Churchill Station. Manual override control is also to be provided at the station. The manual override control arrangement should be verified by ETS.

Under the condition of no piston effect, the forced air system must be able to purge the emergency area at a rate approved by the Emergency Response Department. Additions to the existing ventilation system must be compatible and totally integrated to the existing system.

Fans designated for the control and direction of air flow are required to be:

- Reversible under emergency conditions with full reversing within 30 seconds.
- Sized to provide air velocity of a minimum 60 m/minute in all tunnels leading from a station.
- Fan and drive components must be complete with internal brakes to ensure fans are at zero speed before starting and/or change of air flow direction.

During the design process, and as required, the mechanical design consultant must coordinate with the appropriate City of Edmonton Departments to ensure the proper operation and control of smoke removal in an emergency condition.

Heating, ventilation and air conditioning (HVAC) systems must conform to the regulations of the Alberta Building Code and all other applicable codes in force or pending.

For insulation requirements refer to Section 12.3.2.

12.6.2 Ventilation and Heating Criteria

If it is not practical to discharge exhaust systems outside underground structures, they should be discharged into a well-ventilated area remote from any public areas. Whenever possible, exhaust from public washrooms and battery rooms should be exhausted outside.

During the design process, the consultant shall consider the alternate uses for rooms in LRT facilities, and design ventilation and heating for such uses. The consultant must coordinate with the appropriate City of Edmonton departments to verify these considerations. Rooms in LRT facilities must be ventilated and heated in accordance with the criteria shown in the following table:

Room or Area	Exhaust	Max and Min Operating Range
Washroom	10 changes per hour	15 - 21ºC
Utility/Janitorial Storage	8 changes per hour or natural ventilation	15 - 21°C
Office Areas	8 changes per hour	15 - 24°C
Electrical Equipment	Air conditioned and filtered air (coordinate with LRT on the requirements for air conditioning). 2 speed fan 8 changes per hour at high speed	20ºC

Room or Area	Exhaust	Max and Min Operating Range
Communication Signal, Telephone, Radio Equipment	Air conditioned and filtered air (coordinate with LRT on the requirements for air conditioning). 2 speed fan 8 changes per hour at high speed. Positive pressure to be maintained to prevent entry of dust.	19 to 23°C Humidity Controlled to 40 – 55%
*Traction Power Substation	Filtered air, speed fan, as required for equipment heat gains 8 changes per hour minimum at high speed	18ºC **Note:** Temperature dependent on the type of building structure. Cooling may be required to limit temperature to a maximum of 30 degrees. The electronic protective relays start to malfunction above 30 degrees.
Generator	As determined by the Consultant	As determined by the Consultant
Type II & III Platform Areas		Ceiling mounted radiant heating in semi-enclosed waiting area Floor heating in public waiting areas where deemed practicable
Type II & III Platform Shelters		Consideration for heating and/or ventilation to be given based on type of shelter, location, etc.
Type I and II Exterior Doors/ Thresholds		Radiant Heat over interior side of Doors & Thresholds to prevent ice formation
Crawl Spaces	Fresh air (timer switch of up to 1 hour)	

Table 3 - Heating and Ventilation Requirements

***Note:** The mechanical design consultant must coordinate with the TP substation designer on the placement of mechanical systems and related equipment. Clearances from TP equipment and accessibility to mechanical equipment are key critical design factors.

12.6.3 Ventilation Equipment

Where applicable, variable speed drive systems should be deployed on air systems, and integrated into the BMS.

Fans and Motors must meet the following requirements:

- Station ventilation fans must be of commercial grade.

- Main station fans must be able to operate under plug reverse conditions, and run at 100% volume forward and reverse.
- All motors to high efficiency rated, and inverted duty rated for variable speed drive applications.
- All variable speed drive applications, especially those deployed for emergency track ventilation, must be equipped with 100% manual bypass motor contactor-soft start systems.
- All fan motors over 20 kW must have thermistor winding over-temperature protection. Reversible fans must have electric or mechanical braking to prevent damage to fan and motor. They are not, however, required with variable speed drive applications.

Allowable noise levels due to fan operations are:

- A maximum of 50 dBA when measured outside of the mechanical room.
- A maximum of 56 dBA outside of the station adjacent to the plenum.

12.6.4 Alarms and Controls

Design guidelines for mechanical control systems are presented in Chapter 8 Communications and Control Section 8.3, Building Monitoring System.

12.6.5 Metering (Water and Gas)

If water and gas service is required at a station then the service should be metered. The meter should be located inside the station where possible.

Integrated or adjacent stand-a-lone traction power substations require their own separate service meters, if applicable.

12.7 DRAINAGE

12.7.1 General

Drainage systems are classed as either storm or sanitary facilities.

Design of drainage measures is required for the following major LRT components:

- Open or surface LRT right-of-way.
- Underground structures (tunnels, Type I stations).
- Building structures (Type II and Type III stations and Traction Power substations, etc.).
- LRT and pedway overpasses and underpasses.
- Roadways and parking lots including sidewalks, walkways, multi-use trails when located with the LRT ROW.
- LRT directly related landscaped areas.

Drainage for LRT facilities and installations that are directly exposed to the elements is classed as storm drainage and is normally discharged into a storm sewer. This includes run-off from open ditches, roofs, roadway and parking lots, underpasses, aerial structures and embankments, etc.

Sub-surface drainage on open track sections, retaining walls, and abutments should discharge into an adjacent storm sewer, if available.

Drainage from a building structure plumbing fixtures, floor drains and infiltrated water is classed as sanitary drainage and must be designed to discharge into a sanitary sewer. This includes drainage from underground tunnels and the trackway through Type I stations.

Sanitary drainage must not be permitted to enter the track drainage system.

12.7.2 Design Criteria

This section describes, in general terms, the guidelines and limitations that the design consultant will have to consider throughout drainage design development.

12.7.2.1 Design Storm

LRT underpasses must be designed for a peak run-off from a 1:100 year storm.

The sizing of all other storm drainage runoff collection facilities such as pipes, culverts, ditches, retention ponds, etc. will be subject to the following process:

- A review of the drainage characteristics adjacent to the LRT corridor on an area-by-area basis.
- Development of adequately sized drainage facility scenarios at 10, 25 and 50 year storm events. The evaluation of the scenarios to include a feasibility analysis and cost implications of providing adequate drainage facilities at each storm level.
- The presentation by the drainage design consultant to ETS of a recommended scenario for implementation.

Guidance must be sought from the City Infrastructure Department Drainage Branch to confirm:

- Historical storm intensities and related precipitation data for the area.
- If the existing storm drainage system is capable of handling the run-off from the proposed LRT extension right-of-way.
- If there is a possibility of the existing storm drainage system surcharging and flooding the proposed LRT ROW, facility or installation.

12.7.2.2 General Requirements and Limitations

All LRT drainage systems must:

- Be designed and constructed to meet the standards and requirements of the City Infrastructure Department Drainage Branch. Refer to the City of Edmonton Design and Construction Standards *(City Design Standards)* Chapter 3 Drainage.
- Conform to the regulations of the Alberta Safety Codes Act and the ABC.

<u>Open or Surface LRT Right-of-Way</u>

In the case of open track, where ample space permits the construction of drainage ditches along the right-of-way, the bottom of ditch must be a minimum of 500 mm below the shoulder of the subgrade. The Consultant should carry out a site reconnaissance prior to commencing the drainage design to ensure adequate drainage capacity can be implemented by providing proper drainage grades, outlets or retention areas. In areas where a ditch grade is steep and flow velocity may be high, baffles or riffle dams may be required to prevent the scouring and deterioration of the subgrade.

In areas where space is restricted, a sub-drain system must be provided (refer to Chapter 5 Figures 5.4, 5.5 and 5.6).

Care should be taken to ensure that surface drainage from within the LRT right-of-way does not drain onto areas adjoining the right-of-way.

The design of new LRT facilities and installations must not adversely affect existing drainage courses.

All track sections must be adequately drained to strategic collection points with gravity flow connections to sewers (shortest possible runs, fewest possible bends, and generous cleanouts to be allowed for).

The Consultant must ensure that low-lying areas of the LRT ROW have sufficient storm water drainage capacity (in accordance with the requirements of Section 12.7.2.1) to allow the LRT

trains to continue to operate during periods of heavy rainfall. If feasible, retention ditches or ponds should be provided.

The location and requirements for catch basins and manholes must be checked with the AM&PW Drainage Branch.

Underground and Surface Structures

The Consultant should assume that the walls of the underground structures cannot be effectively waterproofed and that water infiltration will occur.

Water infiltration through roofs and side walls must be controlled through the provision of sub-drains and pressure relief weep drains near the trackway level.

If necessary, backflow preventers and other suitable measures to protect the facility or installation from water intrusion, should be provided.

The outflow from gravity pumps and sump pumps discharging on to track level must be controlled so that the discharge can be directed into any or all of the tunnel drain-ways.

All areas having a fire protection sprinkler system or fire hoses must have sufficient capability to drain the area should activation occur.Heat tracing of piped drainage systems must be provided as required to ensure proper functioning of the system (refer to Section 12.2).

12.7.3 Drains

Types of drain fittings that are acceptable are:

- Catchbasin frame and grate
- Floor drain
- Cleanouts

A minimum 150 mm diameter floor drain with sediment trap must be provided.

12.7.4 Pumping Stations

Pumping stations and sump pumps will only be permitted under extreme circumstances. Their installation will require the prior approval of ETS.

If sump pumps are to be installed, they should meet the requirements as outlined in Section 12.3.3.1.

12.8 COMMISSIONING AND TESTING

Commissioning and testing is to be carried out in accordance with the overall commissioning plan and program (refer to Chapter 1 General, Section 1.6). Activation requirements are outlined in Section 1.6.2.

12.9 PREVENTATIVE MAINTENANCE

The Consultant must coordinate with ETS to ensure that the ETS computerized maintenance program is modified to include all new equipment and related procedures.

The following must be provided:

- Maintenance and lubrication schedules for major components. Schedules to include daily, weekly, monthly, semi-annual and yearly checks and tasks.
- Procedures describing the maintenance tasks required for typical equipment such as bearings, drives, motors and filters.

This information will be compiled for all typical equipment separate from shop drawings.

12.10 MECHANICAL SYSTEMS STANDARD DOCUMENTATION REQUIREMENTS

Refer to Chapter 1 General, Section 1.7 for guidelines related to the preparation of Plan of Record drawings and O&M manuals. Appendix 1 to Chapter 1 Section 1, describes the additional topics/content that must be included.

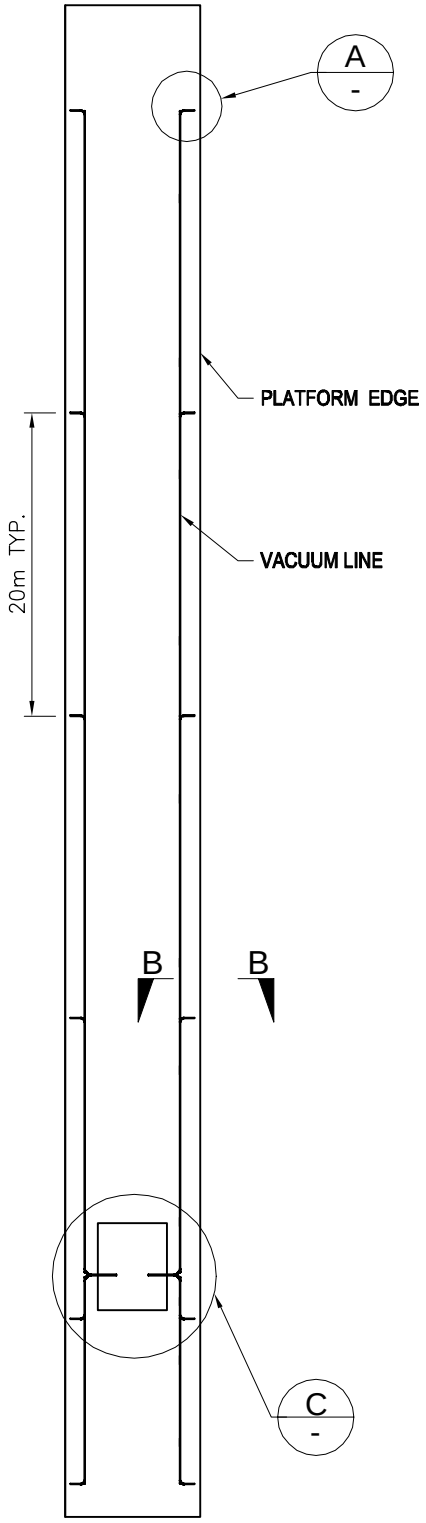

TYPICAL LAYOUT

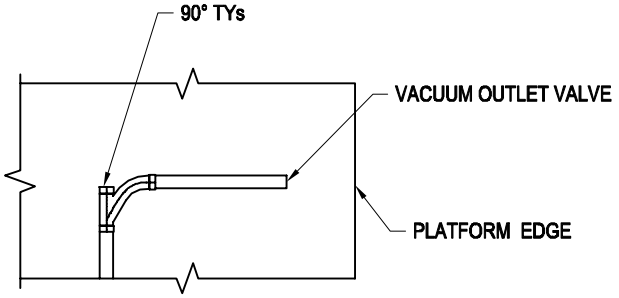

DETAIL A (TYP)

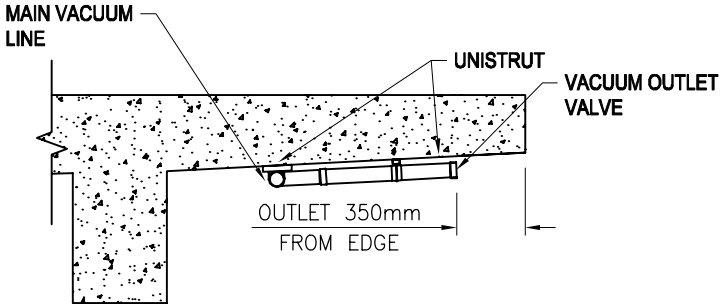

SECTION B-B

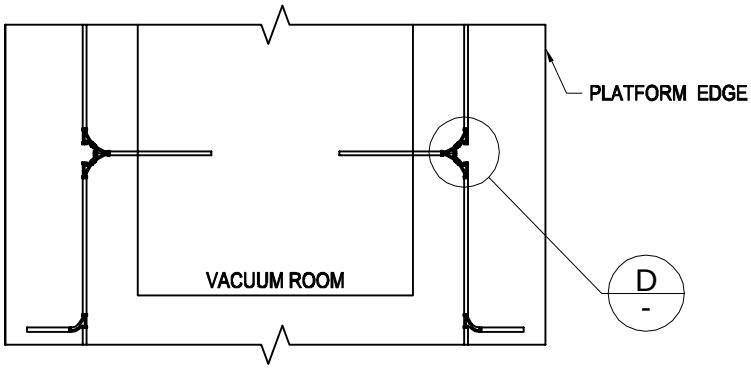

DETAIL C

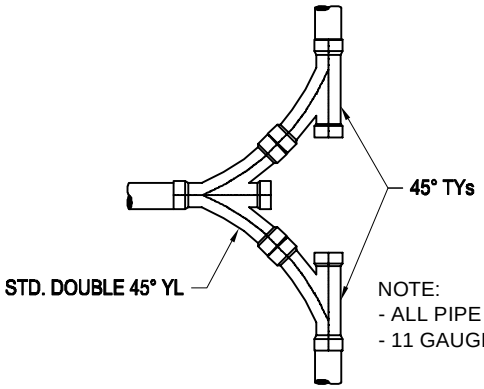

NOTE:
- ALL PIPE AND FITTINGS ARE 2 1/8" DIAMETER.
- 11 GAUGE TUBING AND 16 GAUGE FITTINGS.

DETAIL D

		FIGURE 12.1	CHAPTER 12
		STATION VACUUM LINE LAYOUT GUIDE	MECHANICAL SYSTEMS
4-JUL-11	NEW		
Date	Revision		

LRT DESIGN GUIDELINES

Chapter 13

2017 EDITION – Revisions Tracking Form

Section	Reference	Revision General Description	Issue Date
		NO UPDATES FROM 2011 EDITION	July 2017

13.0 CORROSION AND STRAY CURRENT CONTROL

		Page
13.0	**CORROSION AND STRAY CURRENT CONTROL**	**1**
13.1	GENERAL	1
13.1.1	Introduction	1
13.1.2	Definitions	1
13.1.3	Scope	2
13.1.4	Objectives	2
13.1.5	Applicable Codes, Standards and Reference Documentation	2
13.1.6	Corrosion Protection Specialist Services	3
13.2	SOIL AND WATER CORROSION CONTROL	3
13.2.1	Materials of Construction	3
13.2.2	Safety and Continuity of Operations	3
13.2.3	Accessibility of Installations	3
13.2.4	Special Considerations	3
13.2.5	Materials and Methods	3
13.2.6	LRT Fixed Facilities	5
13.3	STRAY CURRENT CORROSION CONTROL	6
13.3.1	Traction Power System	7
13.3.2	LRT Fixed Facilities	8
13.3.3	Facilities Owned by Others	13
13.4	MISCELLANEOUS CORROSION CONTROL CONSIDERATIONS (COATINGS)	14
13.4.1	General Requirements	14
13.4.2	Metallic-Sacrificial Coatings	14
13.4.3	Organic Coatings	14
13.4.4	Conversion Coatings	14
13.4.5	Ceramic-Metallic Coatings (Cermets)	14
13.4.6	Sealants	15
13.4.7	Barrier Coating System	15

13.0 CORROSION AND STRAY CURRENT CONTROL

13.1 GENERAL

13.1.1 Introduction

This chapter presents the design guidelines related to the provision of corrosion control measures. Corrosion control measures are required to minimize stray current leakage and prevent premature corrosion failures on the LRT system fixed components including surface structures, above ground and below ground structures and adjacent facilities along the LRT corridor.

In the Edmonton LRT System the rails of the track system act as the negative side of an electrical circuit in the traction power network. The positive side is the overhead contact wire system or catenary. The catenary carries the *DC electrical current from the substation to the LRV. The track carries the return current to the substation. This is typical of most electrified rail systems, including heavy rail.

Electrical currents can leak out of the circuit and escape into the soil to find the path of least resistance (if the resistance is lower than the rail) through any available conductor back to the substation. These paths may be buried utility pipelines and cables, other structures (i.e. bridges, buildings) containing metal, or be the soil itself. Stray currents from the positive side of the circuit are generally very small. The current from the negative (track) side tends to be larger due to the proximity of the track to the ground. If the electrical continuity of the track structure is poor, more electricity will return as stray current than through the running rails. Corrosion on the surface of a conductor results when electric current leaves the conductor and returns to the soil. If left uncontrolled stray currents can be *detrimental for a number of LRT components.

***Note:** AC systems do not experience this problem

In summary, it is important to identify the leakage path and to mitigate by electrical isolation and the provision of suitable protection such as sacrificial metals or coatings.

Corrosion control systems should be economical to install, operate, and maintain.

13.1.2 Definitions

Corrosion is defined as the destruction or deterioration of a material because of reaction with its environment. Corrosion of metallic structures is an “electrochemical” process that usually involves small amounts of direct electrical current (dc). It is an “electro” process because of the flow of electrical current. It is a “chemical” process because of the chemical reaction that occurs on the surface and corrodes the metal.

Cathodic Protection is the prevention of electrochemical corrosion of a metallic structure by causing the structure to act as the cathode rather than the anode of and electrochemical cell. This is done by applying a direct current to the metal to be protected and to another metal that acts as a sacrificial anode.

Stray Current refers to extraneous direct currents in the earth. For LRT facilities it implies rail current leakage to its surroundings. Stray currents produce corrosive reactions in LRT structures and facilities and in adjacent utilities. Stray currents place a minimal electrical charge on metallic objects that can oxidize or corrode the object through electrochemical means.

Stray Current Corrosion Control applies to measures installed with the traction power system and trackwork to assure that stray earth traction currents do not exceed maximum acceptable levels. These levels are based on system characteristics and the characteristics of underground structures.

Soil and Water Corrosion Control applies to systems or measures installed to mitigate corrosion caused by soil/rock and groundwater.

Atmospheric Corrosion Control applies to systems or measures installed to mitigate corrosion caused by local climatological conditions and air pollutants. Materials and coatings can be used to significantly decrease atmospheric corrosion rates.

13.1.3 Scope

The emphasis in these guidelines is on soil and stray current corrosion. Atmospheric corrosion is not as problematic in the Edmonton area as it may be in other areas.

Corrosion control design guidelines should encompass all engineering disciplines applied to the any LRT project. Therefore the engineering and design of corrosion control measures must be coordinated with the trackwork, civil / structural, traction power, signals, communications, electrical, mechanical, and utility designs.

13.1.4 Objectives

The application of these design guidelines is intended to meet the following objectives:

- Realize the design life of system facilities by avoiding premature failure caused by corrosion.
- Provide continuity of operations by reducing or eliminating corrosion related failures of systems and subsystems.
- Minimize annual operating and maintenance costs associated with material deterioration.
- Minimize detrimental effects to adjacent privately-owned facilities and structures as may be caused by stray earth currents from LRT operations.

13.1.5 Applicable Codes, Standards and Reference Documentation

All design relating to implementation of the corrosion control requirements must conform to or exceed the requirements of the latest versions of codes and standards identified below.

ACI Publication SP-77 Sulfate Resistance of Concrete
ACI Publication 201.2R Guide to Durable Concrete
ACI Publication 222R Corrosion of Metals in Concrete
ACI Publication 506.2 Below Grade Shotcrete Used as Permanent Support
ASTM G-51, D-512, D-516, C 452-75,
AWWA Standard C105
CSA C22.3 No.4
NACE International Standards
South LRT Road Crossing Design Discussion Report, Stantec Consulting Ltd. May 2004 (Design Reference)
TCRP Report No. 57 Track Design Handbook for Light Rail Transit Chapter 8, Corrosion Control (Design Reference)
Soil Corrosivity and Stray Current Control Design Report, Universal Technical Resource Services (UTRS), INC. (Design Reference)

13.1.6 Corrosion Protection Specialist Services

The design of corrosion protection measures should be undertaken by a Specialist Consultant and be in accordance with NACE International industrial standards.

13.2 SOIL AND WATER CORROSION CONTROL

This section provides guidelines for the design of systems and measures to prevent corrosion of LRT fixed facilities due to contact with area soil/rock and groundwater.

Soil/rock samples should be obtained in conjunction with geotechnical testing in areas of extensive below grade construction. The soil/rock samples should be analyzed for resistively (or conductivity), moisture content, ph, chloride and sulfate ion concentrations and for the presence of sulfides.

Structures should be protected against environmental conditions by the use of coatings, insulation, cathodic protection, electrical isolation, electrical continuity, or a combination of the preceding, as appropriate.

The design of structures should be based on achieving the service life stated in Chapter 9 Structures, Section 9.1.3 through consideration of the following factors:

13.2.1 Materials of Construction

All pressure and non-pressure piping and conduit must be non-metallic, unless metallic materials are required for specific engineering purposes. Aluminum and aluminum alloys should not be used in direct burial applications.

Non-native fill used for backfilling concrete or ferrous structures, must not exceed ph, chloride and sulfate ion levels as outlined in ASTM.

Test reports must be submitted for approval of all imported backfill.

Use of fill material, which does not meet the ASTM criterion, may only be used after review and approval by ETS.

13.2.2 Safety and Continuity of Operations

Corrosion control protection is required for those facilities where failure of such facilities caused by corrosion may affect the safety, or interrupt the continuity of operations.

13.2.3 Accessibility of Installations

Any permanent test facilities installed with certain corrosion control provisions must be accessible by service personnel after installation, allowing for periodic maintenance and monitoring.

13.2.4 Special Considerations

The installation of corrosion control measures for facilities owned by others, but designed as part of the LRT project, must be coordinated through ETS or its designate. This coordination will include the resolution of design and construction conflicts to minimize the impact on other system elements.

13.2.5 Materials and Methods

13.2.5.1 Coatings

Coatings are specified for corrosion control of buried metallic or concrete facilities must satisfy the following criteria:

- Minimum volume resistively in accordance with ASTM D-257
- Minimum thickness as recommended for the specific system, but not less than *15 mils.

*** Note:** A mil is a unit of distance equal to 0.0001 inch

- A chemical or mechanical bond to the metal or concrete surface. Pressure-sensitive systems are not acceptable. Non-bonding systems may be used in special instances, after review and approval by ETS.
- Mill application wherever possible, with field application of a compatible paint or tape system.
- Mechanical characteristics capable of withstanding reasonable wear during handling and earth pressure after installation for the design life of the system.
- Minimum 5-year performance record for the intended service.

Generic coating systems include, but are not limited to the following:

- Extruded polyethylene/butyl based system
- Coal-tar epoxies (two component systems)
- Polyethylene-backed butyl mastic tapes (cold applied)
- Bituminous mastics (airless spray)

Refer to Section 13.4 for the types of coating systems available.

13.2.5.2 Electrical Insulation of Piping

Devices used for electrical insulators for corrosion control should include non-metallic inserts, insulating flanges, couplings, unions, and/or concentric support spacers and meet the following criteria:

- A minimum resistance of 10 megohms prior to installation.
- Sufficient electrical resistance after insertion into the operating piping system such that no more than 2 percent of a test current applied across the device flows through the insulator, including flow through conductive fluids if present.
- Mechanical and temperature ratings equivalent to the structure in which they are installed.
- Internal coating (except complete non-metallic units) with a polyamide epoxy for a distance on each side of the insulator equal to two times the diameter of the pipe in which they are used. Where conductive fluids with a resistively of less than 2,000 ohm-centimeters are present, internal coating requirements must be based on separate evaluation.
- Devices (except non-metallic units) buried in soils must be encased in a protective coating.
- Devices (except non-metallic units) installed in chambers or otherwise exposed to partial immersion or high humidity must have a protective coating applied over all components.
- Inaccessible insulating devices, such as buried or elevated insulators, must be equipped with accessible permanent test facilities.
- A minimum clearance of 30 cm must be provided between new and existing metallic structures. When conditions do not allow a 30 cm clearance, the design must include special provisions to prevent electrical contact with existing structure(s).

13.2.5.3 Electrical Continuity of Piping

Electrical continuity must be provided for all non-welded metallic pipe joints and meet the following criteria:

- Use direct burial, insulated, stranded, copper wire with the minimum length necessary to span the joint being bonded.
- Wire size must be based on the electrical characteristics of the structure and resulting electrical network to minimize attenuation and allow for cathodic protection.
- Use a minimum of two wires per joint for redundancy.
- Surface preparation of the structure to be coated must be required in accordance with the coating manufacturer’s recommendations.

13.2.6 LRT Fixed Facilities

Protective measures to be considered for utilities and buried structures are as follows:

13.2.6.1 Ferrous Pressure Piping

All new buried cast iron, ductile iron, and steel pressure piping must be cathodically protected. The design must satisfy the following the criteria presented in the previous section.

The number and location of anodes and size of rectifier (if required) will be determined on an individual structure basis.

13.2.6.2 Copper Piping

Buried copper pipe must be electrically isolated from non-buried piping. In a station structure, though, install an accessible insulating union where the piping enters through a wall or floor.

Pipe penetrations through the walls and floors should be electrically isolated from building structural elements. The insulator should be located inside the structure and not buried.

13.2.6.3 Gravity Flow Piping (Non-Pressured)

Corrugated steel piping must be internally and externally coated with a sacrificial metallic coating and a protective organic coating.

The design and fabrication of cast or ductile iron piping must include the following provisions:

- An internal mortar lining with a bituminous coating on ductile iron pipe only (not required for cast iron soil pipe).
- A bonded protective coating or unbonded dielectric encasement on the external surfaces in contact with soils in accordance with AWWA Standard C105.
- A bituminous mastic coating on the external surfaces of pipe 150 mm on each side of a concrete/soil interface.

Reinforced concrete non-pressure piping must include the following provisions:

- Water/cement ratios meeting the minimum provisions of AWWA.
- Maximum 250-ppm chloride concentration in the total concrete mix (mixing water, cement, admixture and aggregates).
- Use Type 1 cement within the range of acceptable sulfate concentrations within soil and groundwater.

13.2.6.4 Electrical Conduits

Buried metallic conduits should include the following provisions:

- Galvanized steel with PVC or other coating acceptable for direct burial, including couplings and fittings. The PVC coating is not required when conduits are installed in concrete.
- Electrical continuity through use of standard threaded joints or bond wires installed across non-threaded joints.

13.2.6.5 Buried Concrete/Reinforced Concrete Structures

In general, the design of cast-in-place concrete structures, standard precast components such as vaults or manholes and segmented concrete rings should be in accordance with applicable local codes, regulations and standards. The Consultant should also refer to the appropriate sections of ACI, and ASTM for standards related to concrete durability and corrosion of metals in concrete. to based on the following provisions:

Below grade shotcrete used for permanent support must be in accordance with ACI 506.2 and related applicable provisions. No special corrosion control measures are required for shotcrete applications, which are not considered as providing permanent support.

13.2.6.6 Support Pilings

The following is applicable only to support piling systems, which provide permanent support. Pilings used for temporary support do not require corrosion control provisions.

A barrier coating should be applied to metal piling support structures that are exposed to the environment (i.e. H or soldier piles).

The need for special cathodic protection measures will be determined on an individual basis, based on type of structure, analysis of soil borings for corrosion characteristics and the degree of anticipated structural deterioration caused by corrosion.

Reinforced concrete piling, including fabrications with prestressed members, should be designed in accordance with the standards referred to in Section 13.2.6.5.

Concrete-filled steel cylinder columns, where the steel is an integral part of the load bearing characteristics of the support structure, should be designed considering the need for special measures, such as increased cylinder wall thickness, external coating system, and/or cathodic protection. These designs must also be determined on an individual basis, based on type of structure, analysis of soil borings for corrosive characteristics and the degree of anticipated structural deterioration caused by corrosion. Chloride restrictions must also be a design consideration.

13.2.6.7 Reinforced Concrete Retaining Walls

Cast-in-place concrete retaining walls should be designed in accordance with the standards referred to in Section 13.2.6.5.

Consultants must provide for stray current and soil corrosion control for modular retaining walls with structural support component beneath the LRT tracks.

Pre-stressed or post tensioned concrete cylinder pressure pipe should not be designed for use in the vicinity of the LRT tracks or substations without review on an individual basis to determine alternate materials of construction.

13.3 STRAY CURRENT CORROSION CONTROL

This section provides guidelines that are to be followed by the Consultant to minimize the corrosive effect of stray earth traction currents from transit operations on LRT structures and to privately owned facilities. They are based on anticipated stray earth traction current levels and the characteristics of fixed facilities and other buried structures.

The objective of stray current control should reduce or limit the level of stray currents at the source, under normal operating conditions, rather than trying to mitigate the corresponding effects (possibly detrimental), which may otherwise occur on LRT facilities and other underground structures.

The basic requirements for the control of stray currents are as follows:

- Ability to operate the mainline LRT system with no direct or indirect electrical connections between the positive and negative traction power distribution circuits and ground.
- Design the traction power system and trackwork to minimize stray earth currents during normal revenue operations.

Protective measures such as cathodic protection and induced currents can be applied, if applicable, to ensure that stray currents are maintained within the acceptable range for the structure being protected.

Stray current monitoring along the track should be installed in order to verify that the rails are insulated from the ground and to detect any leakage of stray current.

13.3.1 Traction Power System

Chapter 6, Traction Power provides the design guidelines for the LRT Traction Power System including Substations and the Overhead Traction Power System. The Consultant should also refer to the *Overhead TP Manual Section 2.*7 for additional information on floating grounds and stray currents.

13.3.1.1 Traction Power Substations (Mainline)

TP Substations should be provided with stray current control devices to allow the connection of the negative bus to the station ground mat through a relay (normally open) and a current monitoring shunt. The test facility should be implemented to allow for periodic monitoring of the stray current return to identify changing conditions associated with the track-to-earth resistance.

Substations must be provided remote monitoring systems to record the negative bus-to-earth potential, negative return shunt, track to earth potentials and the stray current return circuit. The remote monitoring system should consist of either a stand-alone data acquisition module and communications package or SCADA interface.

Space should be provided in each substation for future installation of stray current mitigation drainage devices.

13.3.1.2 Positive Distribution System

The positive distribution system should be normally operated as an electrically continuous bus, with no breaks, except during emergency or fault conditions. Intentional electrical segregation of mainline, yard, and shop positive distribution systems is the only type of segregation permitted.

Overhead contact systems, consisting primarily of support poles, the contact wire, and where applicable, the messenger wire, must be designed to minimize the generation of stray current.

13.3.1.3 Mainline Negative Return System

The Consultant should refer to Chapter 5 Trackwork, Sections 5.2.4, 5.5.3 and 5.6.3.1 regarding Edmonton's experience regarding protection against stray electrical currents.

Notwithstanding the measures already used, the application of the following guidelines will provide additional protection to the track system.

Running Rails

The mainline running rails, including special trackwork, grade crossings and all ancillary system connections, should be designed to have a minimum, uniformly distributed, in-service track-to-earth resistance.

Appropriately designed insulating track fastening devices, such as insulated tie plates, insulated rail clips, direct fixation fasteners or other approved methods should be used.

Ballast and sub-ballast construction for ballasted track must meet the provisions of Chapter 5 Trackwork, Sections 5.6.4 and 5.6.5.

The top of the ballast material should be a minimum of *25 mm below the bottom of all metallic surfaces i.e. the rail and all track fastening components in electrical contact with the rail.

*Yard track should be electrically insulated from mainline and shop tracks by use of insulated rail joints in both rails.

***Note:** Denver RTD and Seattle Link systems also uses this guideline. This provision is to ensure that parked vehicles will not electrically connect the shop track or mainline track to the yard track for periods of time longer than that required to move a vehicle into or out of the yard.

Ancillary Systems

Switch machines, signalling devices, train communication systems, and other devices or systems which may contact the rails should be electrically isolated from earth by the use of dielectric materials.

Electrical Continuity

The mainline running rails must be constructed as an electrically continuous power distribution circuit through the use of rail joint bonds, impedance bonds, continuously welded rail, or a combination of the three.

13.3.1.3 Water Drainage

Below grade sections must be designed to:

- Prevent water from dropping or running onto the running rails and related rail appurtenances
- Prevent the accumulation of freestanding water.

Water drainage systems for sections exposed to the environment must be designed to prevent water accumulation from contacting the rails and rail appurtenances.

The Consultant should refer to Chapter 12, Mechanical Systems, Section 12.7 for the Design Guidelines for drainage.

13.3.2 LRT Fixed Facilities

13.3.2.1 Aerial Structures

Column and Bearing Assemblies with Direct Fixation Track

This section applies to aerial structures and bridges that use a column and bearing assembly that can be electrically insulated from deck or girder reinforcing steel and will have insulated trackwork construction.

- Provide electrical continuity of top layer reinforcing steel in the deck/girder by welding all longitudinal lap splices.
- Electrically interconnect all top layer longitudinal reinforcing steel by welding to transverse collector bars installed at breaks in longitudinal reinforcing steel, such as at expansion joints, hinges, and at abutments. Connect collector bars installed on each side of a break with a minimum of two cables.

- Provide additional transverse collector bars at intermediate locations to maintain a maximum spacing of 155 m between collector bars.
- Provide a ground electrode system at each end of the structure and at intermediate locations to maintain a maximum spacing between ground electrode systems of 460 m. The number, location, and earth resistance of the ground electrode system must be determined on an individual structure basis.
- Provide electrical isolation of reinforcing steel in deck/girders from columns, abutments, and other grounding elements. Isolation can be established through the use of insulating elastomeric bearing pads, dielectric sleeves and washers for anchor bolts and dielectric coatings on selected components.
- All copper to steel weld locations (bond cables) should be coated with a cold applied, fast drying mastic consisting of bituminous resins and solvents.

Column and Bearing Assemblies with Tie and Ballast Track

This section covers the same type of aerial structures covered above, but with tie and ballast track construction. Welding of reinforcing steel in the deck is not required for this configuration. The following measures should considered in the design:

- An electrically insulated waterproofing membrane (with protection board) over the entire surface of the deck that will be in contact with the ballast.
- An electrically continuous collector grid, such as steel welded wire fabric, directly on top of the protection board over the waterproofing membrane and beneath the ballasts. The collector grid must extend the full width of the trackway.
- A ground electrode system in accordance with the direct fixation guidelines.
- Electrical isolation of reinforcing steel in deck/girders from columns, abutments, and other grounded elements.
- Any copper to steel weld locations (bond cables) should be coated with a cold applied, fast drying mastic consisting of bituminous resins and solvents.

Bents and Girders with Direct Fixation Track

This section applies to aerial structures that use bent type supports with reinforcing steel extending into the deck/girders. Girders can be pre or post tensioned. This type of construction precludes the electrical isolation of deck/girder steel from bent/column steel. Ground electrode systems are not required for these types of structures.

Electrical continuity of top layer reinforcing steel in the deck/girder by welding all longitudinal lap splices should be provided.

Electrically interconnect all top layer longitudinal reinforcing steel by welding to transverse collector bars installed at bents and on each side of breaks in longitudinal reinforcing steel, such as at expansion joints, hinges and at abutments (deck side only). Connect the collector bars installed on each side of a break with a minimum of two cables.

- Provide electrical continuity of all column/bent steel by welding appropriate reinforcing to at least two vertical column bars. Make these connections to each of the two vertical bars at the top and bottom of the column/bent.
- Electrically interconnect column/bent steel to deck/girder steel by welding at least two vertical column bars to collector bars installed at bents.
- Electrically interconnect column/bent steel to footing steel when column/bent steel penetrates the footing. Weld at least two vertical column/bent bars to footing reinforcing steel.
- Electrically interconnect pre or post tensioned cables to continuous longitudinal reinforcing steel by welding a cable between each anchor plate and the longitudinal reinforcing steel.
- All copper to steel weld locations (bond cables) should be coated with cold applied, fast drying mastic consisting of bituminous resins and solvents.

Bents and Girders with Tie and Ballast Track

This section covers the same type of aerial structures covered above, but with tie and ballast track construction.

- Provide the same features as described in the bullet points above for direction fixation and the following additional item.
- Provide a waterproofing, electrically insulating membrane over the entire surface of the deck that will be in contact with the ballast.
- All copper to steel weld locations (bond cables) should be coated with a cold applied, fast drying mastic consisting of bituminous resins and solvents.

Concrete Deck/Exposed Steel with Direct Fixation Track

This section applies to bridge structures that use a reinforced concrete deck with exposed steel superstructure and will have insulated trackwork construction. This type of construction precludes the electrical insulation of deck reinforcing steel from superstructure steel.

- Provide electrical continuity of top layer reinforcing steel in the deck/girder by welding all longitudinal lap splices.
- Electrically interconnect all top layer longitudinal reinforcing steel by welding to transverse collector bars installed at breaks in longitudinal reinforcing steel, such as at expansion joints, hinges, and abutments. Connect the collector bars installed on each side of a break with a minimum of two cables.
- Provide additional transverse collector bars at intermediate locations to maintain a maximum spacing of 155 m between collector bars.
- If the total structure length exceeds 75 m provide a ground electrode system at each end of the structure and at intermediate locations to maintain a maximum spacing between ground electrode systems of 460 m. The number, location and earth resistance of the ground electrode system must be determined on an individual structure basis.
- Provide test facilities at each end of the structure and at intermediate locations to maintain a maximum spacing of 155 m between test points. The facilities will house test wires from the collector bars and ground electrode system, if present.
- Provide electrical isolation of reinforcing steel in the deck and superstructure steel from columns, abutments and other grounded elements. Isolation can be established through the use of insulating elastomeric bearing pads, dielectric sleeves and washers for anchor bolts and dielectric coatings on selected components.
- If electrical isolation of reinforcing steel in the deck and superstructure steel from columns, abutments and other grounded elements cannot be obtained, then electrical continuity of metallic components within these latter elements must be established by appropriate welding and bonding procedures.
- All copper to steel weld locations (bond cables) should be coated with a cold applied, fast drying mastic consisting of bituminous resins and solvents.

Concrete Deck/Exposed Steel with Tie and Ballast Track

This section covers the same type of aerial structures covered above, but with tie and ballast track construction. Welding of reinforcing steel in the deck is not required for this configuration.

- Provide an electrically insulating waterproofing membrane that is(with protection board) over the entire surface of the deck that will be in contact with the ballast.
- Provide an electrically continuous collector grid, such as steel welded wire fabric, directly on top of the protection board over the waterproofing membrane and beneath the ballast. The collector grid must extend the full width of the trackway.
- Provide a ground electrode system at each end of the structure and at intermediate locations to maintain a maximum spacing between ground electrode systems of 460 m.

The number, location and earth resistance of the ground electrode system must be determined on an individual structure basis.

- Provide test facilities at each end of the structure and at intermediate locations to maintain a maximum spacing of 155 m between test points. The facilities will house test wires from the collector grid and ground electrode system, if present.
- Electrically isolate the reinforcing steel in the deck and superstructure steel from columns, abutments and other grounded elements. Isolation can be established through the use of insulating elastomeric bearing pads, dielectric sleeves and washers for anchor bolts and dielectric coatings on selected components.
- If the electrical isolation of reinforcing steel in the deck and superstructure steel from columns, abutments, and other grounded elements cannot be obtained, then the electrical continuity of metallic components within these latter elements should be established by appropriate welding and bonding procedures.
- All copper to steel weld locations (bond cables) should be coated with a cold applied, fast drying mastic consisting of bituminous resins and solvents.

13.3.2.2 Underground Structures

It is recommended that reinforcing steel in underground structure (tunnels and stations) inverts be designed to be electrically continuous in accordance with the following general requirements:

- The longitudinal lap splices in the top layer of the first-pour reinforcing steel be welded.
- All longitudinal members to a transverse (collector) member at intervals not exceeding 155 m should be welded. This included at electrical (physical) breaks in the longitudinal reinforcing steel (i.e. at expansion joints).

Test facilities should be installed at each end of Type I station platforms and at every collector bar. Each facility to consist of insulated copper wires, conduits and enclosures terminated at an accessible location.

Soil conditions and environmental corrosivity should be evaluated to determine the need for the application of a barrier coating. If soils are deemed to be highly corrosive apply a coating in accordance with Section 13.2.5.1. Also refer to Section 13.4.

Corrosion control methods selected should include consideration of the following:

- Internal and external coatings
- Segment bonding
- Test electrodes
- Cathodic protection test ports

The structure cross section should include space for a cathodic protection rectifier, distribution conduit and power supply.

13.3.2.3 OCS Mast Foundation Grounding

All metallic components inclusive of the pole base-plate, that will be partially embedded or come in contact with concrete surfaces, should be coated with a sacrificial or barrier coating. The sacrificial coating must be applied to the entire component. The barrier coating should extend a minimum of 150 mm into the concrete and a minimum of 13 mm above the surface of the concrete.

At-Grade OCS Support Masts

Electrical continuity of reinforcing steel with support pole foundations must be established to provide an adequate means for dissipating any leakage current from the contact wire and, where applicable, the messenger wire. The following minimum provisions should be included in the design:

- The outermost layer of vertical reinforcing steel within the concrete foundation should be tack welded at all intermediate vertical lap joints and to reinforcing bar rings installed at the top and bottom of the reinforcing bar cage.
- A copper cable should be connected between the base of the support mast and the foundation reinforcing steel. The cable should be thermite welded or brazed to the support mast and routed in such a manner that it will not be susceptible to damage during construction or after installation is complete.
- The copper cable should be sized based upon anticipated fault current and fault clearing time.

Different electrical continuity requirements may be necessary depending on the actual reinforcing configuration for the support mast foundations.

All copper to steel weld locations (bond cables) should be coated with a cold applied, fast drying mastic consisting of bituminous resins an solvents.

The Consultant should also refer to the *Overhead TP Manual Section 7.11* for coatings to be applied to mast anchor bolts and anchor bolt nuts.

OCS Poles on Aerial Structures

OCS poles located on aerial structures should include either of the following minimum set of provisions, depending on the type of aerial structure.

- Where the aerial structure includes welded deck reinforcing steel connected to a ground electrode system, electrically interconnect the OCS support masts on the structure and connect these poles to the ground electrode system.

  .1 Cabling used to interconnect the poles and the ground electrode system should be sized based upon anticipated fault current and fault clearing time.

  .2 The cabling should be routed in conduit and terminated in junction boxes or test cabinets that also house wires from the deck reinforcing steel and the ground electrode system.

  .3 Cabling should be designed to allow for connection of interconnected OCS masts along the aerial structure to all ground electrode systems installed with a particular aerial structure.

- Where the aerial structure has welded deck reinforcing steel but does not include a ground electrode system, electrically connect the OCS support masts to the welded deck reinforcing steel.

  .1 Provide a copper cable from each OCS support mast to the deck reinforcing steel. The copper cable should be sized based upon anticipated fault current and fault clearing time.

  .2 Thermite weld or braze the cable to the OCS support mast and preferably to the nearest transverse collector bar installed in the aerial structure deck.

  .3 Where it is not practical to connect an OCS mast directly to a transverse collector bar, because of excessive distance or other factors, connect the pole to a local transverse reinforcing bar using a copper cable and weld the transverse reinforcing bar to at least three upper layer longitudinal reinforcing bars in the deck.

- All copper to steel weld locations (bond cables) should be coated with a cold applied, fast drying mastic consisting of bituminous resins and solvents.

13.3.2.4 Utility Structures

All piping and conduit must be non-metallic, unless metallic facilities are required for engineering purposes. No special provisions are required if non-metallic materials are used.

Metallic Facilities (System Wide)

Pressure or non-pressure piping exposed within crawl spaces or embedded in concrete inverts do not require special provisions.

Pressure piping that penetrates station walls must be electrically insulated from the external piping to which it connects wall reinforcing steel, and from watertight wall sleeves.

Metallic Facilities (Yard)

Tracks in yards are grounded. Metallic piping in yards must be adequately protected from corrosion. Protective measures are to be jointly determined by ETS and the Utility Service Provider.

13.3.3 Facilities Owned by Others

13.3.3.1 Utility Relocations

Corrosion control requirements for buried utilities installed by the utility provider as part of LRT construction must be the responsibility of the individual utility provider. Minimum stray current corrosion control criteria, when guidance is requested by the utility provider, should be in accordance with the following Section 13.3.3.2.

Relocated or replaced utilities, installed by the LRT project contractor must be installed in accordance with the utility owner specifications. The following are the minimum provisions applicable to ferrous and reinforced concrete pressure piping. Other materials and structures will require individual review.

- Electrical continuity through the installation of insulated copper wires across all mechanical joints for which electrical continuity cannot be assured.
- Electrical access to the utility structure via the installed test facilities.
- The need for additional measures, such as electrical isolation, application of a protective coating system, installation of cathodic protection, or any combination of the preceding, should be based on the characteristics of the specific structure and should not adversely effect the existing performance within the environment.

13.3.3.2 Existing Utility Structures

The need for stray current monitoring stations will be jointly determined by ETS and the utility provider. If the utility provider requires assistance, the following minimum provisions can be suggested.

- Test facilities may be installed at select locations for the purpose of evaluating stray earth current effects during start-up and revenue operations. The suggested guidelines for location of test facilities are as follows:

  .1 At all utility crossings with the system, and on structures that are within 90 m and parallel to the system right-of-way.

  .2 At locations on specific utility structures that are within 90 m of the system traction power substations.

13.3.3.3 Existing Bridge Structures

Stray current corrosion control for existing bridge structures can be addressed by limiting earth current levels at the source (running rails). To provide the primary stray current control for these facilities refer to the guidelines outlined in Sections 13.3.1.1 to .3 and 13.3.2.2.

13.4 MISCELLANEOUS CORROSION CONTROL CONSIDERATIONS (COATINGS)

13.4.1 General Requirements

Coatings that are applied to control corrosion must:

- Have established performance records for the intended service and be compatible with the base metal to which they are applied.
- Be able to demonstrate satisfactory gloss retention, color retention, and resistance to chalking over their minimum life expectancies.
- Have minimum life expectancies, defined as the time prior to major maintenance or reapplication, of 15 to 20 years.

13.4.2 Metallic-Sacrificial Coatings

Acceptable coatings for carbon and alloy steels for use in tunnels, crawlspaces, vaults, or above grade are as follows:

- Zinc
- Aluminum
- Aluminum-zinc
- Cadmium and electroplated zinc (sheltered areas only)
- Inorganic zinc (as a primer)

13.4.3 Organic Coatings

Organic coating systems should consist of a wash primer (for galvanized and aluminium substrates only), a primer, intermediate coat(s), and a finish coat. Acceptable organic coatings, for exposure to the atmosphere, are as follows:

- Aliphatic polyurethane's
- Vinyl copolymers
- Fusion-bonded epoxy polyesters, polyethylenes, and nylons
- Acrylics, where not exposed to direct sunlight
- Alkyds, where not exposed to direct sunlight
- Epoxy as a primer where exposed to the atmosphere or as the complete system where sheltered from sunlight

13.4.4 Conversion Coatings

Conversion coatings, such as phosphate and chromate coatings can be used as pretreatments only for further application of organic coatings.

13.4.5 Ceramic-Metallic Coatings (Cermets)

This hybrid-type coating system is acceptable for use on metal panels and fastening hardware.

13.4.6 Sealants

All crevices should be sealed with a polysulfide, polyurethane or silicone sealant.

13.4.7 Barrier Coating System

There are two basic types of barrier systems available. One is where corrosion protection is needed but appearance is not a primary concern. The other is where both corrosion protection and good appearance are needed.

The Consultant should select a suitable barrier system based on the prevailing conditions

All coatings must be applied in accordance with manufacturer's specifications.

LRT DESIGN GUIDELINES

Chapter 14

2017 EDITION – Revisions Tracking Form

Section	Reference	Revision General Description	Issue Date
		NO UPDATES FROM 2011 EDITION	July 2017

14.0 IMPACT MITIGATION, AESTHETICS, ROW CONTROL

		Page
14.0	**IMPACT MITIGATION, AESTHETICS, ROW CONTROL**	**1**
14.1	GENERAL	1
14.1.1	Scope	1
14.1.2	Bylaws, Standards, Practices, Guidelines, References	1
14.2	LRT IMPACTS AND ABATEMENT MEASURES	1
14.2.1	LRT Impacts	1
14.2.2	Community Standards Bylaw	2
14.2.3	Abatement Techniques	2
14.3	AESTHETIC CONSIDERATIONS	3
14.3.1	General	3
14.3.2	Landscape Design Principles	3
14.3.3	Landscape Design Reference Documents	6
14.3.4	Architectural Requirements	6
14.4	ROW ACCESS CONTROL AND PROTECTION	6
14.4.1	Fencing	6
14.4.2	Signage	7

14.0 IMPACT MITIGATION, AESTHETICS, ROW CONTROL

14.1 GENERAL

14.1.1 Scope

This chapter provides the design guidelines for the following:

- Measures that can be implemented to mitigate the impacts that LRT can have on adjacent communities.
- Aesthetic treatment including landscaping along the LRT ROW and around stations.
- The control and protection of the LRT ROW.

14.1.2 Bylaws, Standards, Practices, Guidelines, References

City of Edmonton Community Standards Bylaw 14600
City of Edmonton Design and Construction Standards *(City Design Standards*)
City of Edmonton Urban Traffic Noise Policy C506
City of Edmonton Noise Bylaw 7255
City of Edmonton Zoning Bylaw 12800
Noise Position Paper – Stantec Consulting Ltd., March 2001
Residential Vibration Monitoring and Assessment – ACI Acoustical Consultants Inc., May 2003

14.2 LRT IMPACTS AND ABATEMENT MEASURES

14.2.1 LRT Impacts

In addition to affecting traffic and pedestrian patterns, the introduction of LRT into a community may be visually obtrusive, and may be perceived as increasing noise and vibration levels.

The development of transportation options during the planning phase is intended to present solutions related to mitigate the disruption of vehicular traffic and pedestrian patterns.

14.2.1.1 Visual Intrusion

The installation of the LRT infrastructure which includes the trackway, overhead catenary wires and support masts, signal support poles, grade crossing control measures, fencing, stations, and other ancillary structures, including the LRT train moving through the community, may be considered by some community residents as being visually displeasing.

14.2.1.2 Noise

The City of Edmonton has enacted Policy 506, the Urban Traffic Noise Policy. The policy defines noise level descriptors and specifies acceptable noise levels generated by urban traffic and high speed transit facilities. Mitigating the impact of LRT development is governed by the following criteria:

"The City of Edmonton will seek to achieve a projected attenuated noise level below 65 dBA *Leq_{24}, or as low as technically, administratively, and economically practical, with an objective of achieving noise level of 60 dBA Leq_{24}, where any transportation facility (major arterial roadway, light rail transit, or future high speed transit) is proposed to be built or upgraded through or adjacent to a developed residential area. Funding for noise attenuation, where appropriate, and subject to availability, is considered in the cost of the project".

***Leq (Equivalent Continuous Sound Level)** is defined as a calculated sound level over the measured time period that has the same acoustical energy as the actual fluctuating sound levels that occurred during the same period. It is a single number descriptor commonly used for environmental noise measurements.

The Consultant should refer to the Stantec *Noise Position Paper* for additional data derived from an environmental noise model study that was carried out for the South LRT Extension.

14.2.1.3 Vibration

Vibration can be caused by the movement of LRT trains along the tracks and LRT construction activities. Refer to Chapter 2 Vehicles, for a brief discussion on the degree of vibration generated by LRV's. The Consultant should also refer to the ACI *Residential Vibration Monitoring and Assessment Study* for the results of vibration monitoring and the prediction of vibration levels in the McKernan and Belgravia communities.

14.2.2 Community Standards Bylaw

The City of Edmonton has enacted Bylaw 14600, Community Standards Bylaw, February 13, 2008. The Bylaw defines noise level descriptors, specifies acceptable noise levels that can be generated by vehicles and what is acceptable for several classes of land use. It also specifies the penalty to be imposed when the noise levels are exceeded.

Noise from LRT operations is covered in the criterion for vehicular noise and should not exceed a 24 hour Leq of 60 dBA.

14.2.3 Abatement Techniques

14.2.3.1 Visual Abatement

Screen fencing, berming, depressed LRT alignment, landscaping, or combinations thereof, are all acceptable visual screening methods subject to ROW availability, and cost-benefit analysis. Screen fencing can be of wood, metal or concrete construction.

14.2.3.2 Vibration Abatement

Vibration as a result of LRT operations is not anticipated to be problematic as per the findings of the ACI *Residential Vibration Monitoring and Assessment Study*. Notwithstanding, Chapter 5 Trackwork, Section 5.2.5, describes trackwork design measures that can be employed to further reduce LRV vibration levels.

14.2.3.3 Noise Abatement

There are a number of techniques available to reduce or absorb the noise generated from a passing LRT train.

These techniques are:

- Trackwork design measures as described in Chapter 5 Trackwork, Section 5.2.5.
- Lubrication of rails on curves to reduce wheel squeal.
- Construction of depressed track sections or earth berming.
- Noise Walls or Barriers.

To be effective, the medium selected for a noise wall preferably should have sound absorption characteristics, and must be placed in the line of sight between the noise source and the point of observation.

The placement of trees and shrubs alone is not an acceptable medium for reducing noise.

The location, size and spatial requirements of the installation will be determined during preliminary engineering phase of the design activities.

Structural design considerations for noise walls are outlined in Chapter 9 Structures, Section 9.6.

14.3 AESTHETIC CONSIDERATIONS

14.3.1 General

Chapter 1 General, Section 1.2 describes, in general terms, the Design Physiology for LRT development in Edmonton. Section 1.2.2 Land Use, lists a number of related items that Consultants must examine through the planning and design process. Section 1.2.3 Aesthetics/Arts Program, provides details of City Policy C458C related to the provision of Artwork in City facilities.

The Consultant must become familiar with this material at the outset of design.

In addition, Policy F-5 of the City of Edmonton Transportation Master Plan (1999) states “Use current design when rehabilitating transportation infrastructure, unless this has adverse impacts which outweigh potential benefits”. The intent of the policy is to ensure that when an existing LRT corridor is upgraded, current design standards for landscaping, aesthetics, and screening are reviewed and applied, if appropriate.

14.3.2 Landscape Design Principles

14.3.2.1 General

From the broad principles, seven major design principles were formulated for landscape development in the LRT corridor. They are:

- Safety and security
- Maintenance
- Neighbourhood integration and mitigation
- Buffering
- Aesthetics
- Fiscal responsibility
- Public involvement

The principles apply to the LRT ROW, stations, Park and Ride, and Kiss and Ride facilities, traction power substations, structures, and roadway and pedestrian access elements.

14.3.2.2 Safety and Security

The safety of the public and City operating and maintenance staff within the LRT corridor should be an overriding consideration for the design of the LRT landscape.

The LRT corridor and its landscape components must:

- Be compatible and safe for all LRT users and City operating and maintenance staff;
- Be designed using the LRT Safety and Security Guidelines;
- Incorporate Crime Prevention Through Environmental Design (CPTED) principles; and
- Not compromise the security of the LRT stations, right-of-way or the adjacent communities.

14.3.2.3 Maintenance

Maintenance must be considered in all aspects of LRT landscape. Low maintenance will reduce long-term costs, help provide an enduring landscape and provide long term fiscal responsibility.

The LRT corridor and its landscape components must:

- Be durable, functional and able to withstand heavy use and potential vandalism;
- Be compatible with local climatic conditions. Considerations must be given to the environmental conditions (wind, sun, shade, snowdrifting, aspect and moisture regime) of the sites and their effect on the hard and soft landscape. Site specific conditions will have to be considered;
- Meet the City of Edmonton standards for road right-of-way planting requirements; and
- Accommodate typical City of Edmonton maintenance practices.

14.3.2.4 Neighborhood Integration and Impact Mitigation

Along the LRT corridor, integration of the LRT landscape and mitigation of impacts in the surrounding community will perpetuate and enhance the existing neighbourhood flavour and identity.

The LRT corridor and its landscape components must:

- Identify and reflect the character/theme of the neighbourhoods that it moves through by utilizing similar landscape architectural streetscape elements;
- Protect, retain and /or reuse as much of the existing hard and soft landscape as possible;
- Where possible, reconstruct distributed landscapes to a condition similar to pre-LRT development and/or as negotiated through the stakeholder process;
- Provide replacement compensation of permanently removed hard and soft landscape with other landscaping within the neighbourhood as negotiated through the stakeholder process;
- Maintain, facilitate and/or integrate major pedestrian movement systems, i.e. neighbourhood paths and major walkways;
- Maintain, facilitate and allow ease of movement of other modes of neighbourhood traffic, i.e. bicycle, etc.; and
- Satisfy the requirements of the Corporate Tree Management Policy and Bylaw 7829 concerning Boulevards, Flankages, Utility Lots and Boulevard Trees within the City of Edmonton.

14.3.2.5 Buffering

Landscape components used for screening or buffering of impacts of the LRT may help satisfy resident needs and help maintain the character of the remaining neighbourhood.

The LRT corridor and its landscape components must:

- Provide buffering from the adjacent land uses where feasible;
- Provide buffering of LRT parking lots from adjacent land uses;
- Provide buffering that reflects the community, its character and the adjacent setting; and
- Provide buffering with planting, berming, fencing or combination of these elements as space and design considerations, i.e. noise, snowdrifting, lighting, etc., and budget allow.

14.3.2.6 Aesthetics

The LRT development must be attractive and visually pleasing to the general public. Landscape may be used to soften and enhance the visual character of the LRT corridor and present a positive image to attract ridership while retaining safety and security.

The LRT and its landscape components must:

- Recognize and provide visual interest for all seasons through the use of a variety of materials, color, etc.;
- Provide a sense of unity for the corridor with the use of similar materials and theme;
- Provide a sense of scale appropriate for the corridor and the adjacent land uses. Landscaping may be used to reduce the scale of retaining wall, fencing, overpasses, parking lots, etc. or provide a more intimate scale to a space for meeting or seating areas;
- Define special sites and uses such as schools, major intersections, commercial, etc.;
- Enhance and define the uses of the adjacent sites;
- Frame important views, neighbourhood identity features and landmarks to increase their significance;
- Selectivity screen views and facilities to reduce their impact on the adjacent community;
- Integrate the corridor, stations and platforms into the neighbourhood within the use of similar materials and design theme;
- Incorporate significant existing site features such as signage, buildings and existing plant materials into the landscape; and
- Provide orientation in the neighbourhood and within the LRT corridor.

14.3.2.7 Fiscal Responsibility

The LRT landscape development must meet the established budget for the project. All design must:

- Show fiscal responsibility;
- Produce an enduring, long lived development within the community;
- Recognize the interconnection of site design and facility maintenance operations; and
- Minimize impacts but maximize the value received for the dollars expended.
  Preference will be given to development which retains community stability and meets the budget.

14.3.2.8 Public Involvement

The LRT landscape development must incorporate a comprehensive public involvement process (refer to Ch. 1 General Section 1.2.1) for each geographic location. This process, at a minimum, must address the statement of principles of LRT planning and the landscape design principles listed above and allow for public input on the following:

- Safety concerns and issues;
- Retention or modification of existing landscape themes, i.e. naturalized or formal landscape, paving, etc.;
- Desired pedestrian and vehicular movement patterns;
- Desired visual screening/buffering of adjacent land uses;
- Existing views to be retained, enhanced or screened;
- Existing features/landmarks to be retained, enhanced or screened;
- Potential location(s) of compensatory landscape;
- Neighbourhood identity and character;
- City standards and maintenance requirements;
- Other site specific issues; and

- Review of proposed solutions, designs, schedules and budgets

14.3.3 Landscape Design Reference Documents

Several documents have been prepared by the City that provides the Consultant with the guidelines and standards to be used in the development of design landscape plans and specifications. The intent is not to restate the content here, but just list the documents for the Consultant's reference. They are:

City Design Standards - Volume 5 Landscaping
ETS Transit Centre Design Guidelines – February 2010 (Draft)

14.3.4 Architectural Requirements

The Consultant must prepare designs for LRT stations and Ancillary facilities, grade separation structures, noise, and screen and barrier walls, in accordance with the design principles stated in Chapter 10 Stations and Ancillary Facilities, Section 10.2.6.

14.4 ROW ACCESS CONTROL AND PROTECTION

For safety and security reasons, access onto the LRT ROW by the public (in vehicles, on bicycles, or on foot) must be controlled through the provision of fencing, barriers, and signage.

Where different types of fencing/barriers connect together, the design must accommodate a seamless transition in order to maintain the continuity of the fence/barrier.

14.4.1 Fencing

14.4.1.1 Exclusive, Semi-Exclusive Use ROW

All ROW in this operating category must be fenced to provide protection for the public. Normal fencing requirements will be heavy-duty chain link barrier fencing. The absolute minimum fence height is 1.2 m with a height of 1.8 m being typical. Fencing will generally be parallel to the track and located within the defined ROW. The Consultant should refer to the figures in Chapter 3, Clearances and Right-of-Way for further details.

Where aesthetics and community standards demand, other types of protection such as wooden, steel or concrete barriers, pipe rail, bollard and chain, or hedgerows may be considered. The location and type of barrier fence will be determined on a case-by-case basis.

Where necessary, gates that can be locked must be installed to provide access to the ROW by maintenance or emergency personnel and equipment. The locations should include direct access to all surface trackway turnouts. This requirement is also applicable to Section 14.4.1.2.

14.4.1.2 Shared Use ROW

Where the LRT alignment is located in a shared use ROW, the installation of fencing or barriers may be somewhat limited due to the roadway and pedestrian movements, and related crossing requirements. Each section of the LRT alignment must be analyzed carefully to determine feasible fencing or barrier locations.

14.4.1.3 Type II and III Stations

If practicable, fencing/barriers should be installed adjacent to surface LRT stations to prevent pedestrians from accessing the tracks except at controlled crossing areas.

The following factors should be considered when developing the fence/barrier location plan:

- Safety of pedestrians including persons with disabilities.
- Station platform access

- Grade crossing configuration and related control measures (refer to Chapter 18 Street Design, Section 18.5, Grade Crossing Safety)

14.4.1.4 Drop-Off and Parking Areas

Fencing or barriers should be considered for locations where there is the potential vehicular/ pedestrian conflict, or security may become an issue (refer to Chapter 18 Street Design, Section 18.7).

14.4.1.5 Tunnel Portals/Overpass Structures

Fencing should be considered for areas around tunnel portals and on bridges for use by pedestrians crossing over the LRT trackway. The objective is to discourage persons from dropping or throwing objects onto the LRT ROW.

In areas where pedestrians come into close proximity to the overhead catenary system, a protective shroud must be installed over the contact wires. The mesh in the shroud should be closely spaced to prevent any contact with the energized conductors (refer to Chapter 6 Traction Power, Figure 6.8).

14.4.1.6 Related Fencing Requirements

Vehicle service, maintenance and storage areas must be secured by a perimeter fence.

All fencing with a metal component to be located in areas where pedestrian movements occur must be grounded.

14.4.1.7 Standards Reference Documents

Standards for Screen, Uniform and Solid fences are provided in Volume 5 Section 10 Landscaping, of the *City Design Standards*.

The specification for steel chain link fencing is given in Volume 5, Section 02821. For chain link fence details, refer to Drawings 9450, 9452, and 9454.

Refer to Chapter 5 Trackwork, Figure 5.29 for the typical detail of bollard and chain (two chains) fencing mounted on ballast curb. Where a bus stop is located immediately adjacent to the LRT right-of-way, and bollard and chain is utilized, three (3) chains along the length of the stop.

14.4.2 Signage

Signage indicating that trespassing is prohibited on the LRT ROW should be erected at all locations where the public can gain access. Typical locations include road and pedestrian grade crossings and at stations. Other specific signage may be required at designated locations.

LRT DESIGN GUIDELINES

Chapter 15

2017 EDITION – Revisions Tracking Form

Section	Reference	Revision General Description	Issue Date
Appendix	Appendix I	Revised checklist.	July 2017

15.0 ACCESSIBILITY

		Page
15.0	**ACCESSIBILITY**	**1**
15.1	GENERAL	1
15.1.1	Introduction	1
15.1.2	Abbreviations, Acronyms	1
15.1.3	Definitions	1
15.1.4	Applicable Codes, Standards, Practices	2
15.1.5	Design References	2
15.1.6	Accessibility Features/ABC References	2
15.2	ACCESSIBILITY POLICIES	2
15.2.1	Policy C463 – Accessibility to City of Edmonton Owned and Occupied Buildings	3
15.2.2	ETS Accessible Transit Instruction	4
15.2.3	Stakeholder Groups	5
15.3	LRT STATION DESIGN	5
15.3.1	Accessibility Principles	5
15.3.2	Interior Accessible Routes	5
15.3.3	Platform, Public Areas and Amenities	10
15.4	STATION EXTERIOR AREAS	13
15.4.1	Exterior Accessible Routes	13
15.4.2	Passenger Loading Zones	14
15.4.3	Parking Lots	15
15.5	TRANSIT CENTRES	15
15.6	SAFETY AND SECURITY	15

List of Appendices

Appendix I – Checklist for Accessibility and Universal Design in Architecture

15.0 ACCESSIBILITY

15.1 GENERAL

15.1.1 Introduction

This chapter is a consolidation of the accessibility and barrier-free design criteria to be applied to the interior of LRT stations, their entranceways, station site access routes, and vehicular parking and drop-off areas adjacent to a station.

This chapter also provides a summary of the City and ETS Policy statements on accessibility, and definitions that are commonly used. It also indicates that Edmonton City Council has established an Advisory Board with the mandate to review LRT facility plans at the various stages of design development.

The purpose of consolidating these guidelines into one chapter is to provide design consultants and ETS and other City staff with one location within the Guidelines where most references to barrier-free guidelines and requirements can be found without having to search through the full text of several chapters of these guidelines (also refer to Section 15.1.6).

15.1.2 Abbreviations, Acronyms

CSA	Canadian Standards Association
TAC	Transportation Association of Canada
TCRP	Transit Cooperative Research Program
TTY	Text telephone for the hearing impaired
US DOT	United States Department of Transportation

15.1.3 Definitions

Accessibility is the design and construction in and adjacent to a building, including the building site and adjacent public ways, which allows ease of movement and safety for all employees, citizens, visitors and others, including persons with disabilities. To ensure accessibility for persons with disabilities, the building including the building site and adjacent public ways, shall be barrier-free and shall incorporate principles of barrier-free design (Source: City Policy C463).

Barrier-Free is a feature of a building and its related facilities whereby it can be approached, entered and use by persons with physical, mental or sensory disabilities. (Source: City Policy C463)

Barrier-Free Design is the incorporation and utilization of design principles to construct an environment that is functional, safe, and convenient for all users, including those with any type of disability. (Source: City Policy C463).

Note: Barrier-free design is also referred to as Universal Design.

Barrier-Free Design Guide is a design guide respecting the minimum building requirements for disabled persons in the most current Alberta Building Code in force in the Province of Alberta. (Source: City Policy C463)

Disabilities are physical, mental or sensory conditions, which require barrier-free buildings that can be easily approached, entered and used. (Source: City Policy C463)

Mobility Challenged are persons with disabilities, elderly persons, families with children or persons with temporary impairments or disabilities. (Source: ETS Transit Accessible Instruction)

Mobility Aids/Equipment means a wheelchair, walker, crutches, assistance dogs, strollers, scooters, canes and oxygen tanks. (Source: ETS Transit Accessible Instruction)

15.1.4 Applicable Codes, Standards, Practices

Americans with Disabilities Act (ADA) – Accessibility Requirements for Fare Equipment
Access Needs of Blind and Visually Impaired Travellers in Transportation Terminals – Canadian National Institute for the Blind (CNIB)
Alberta Building Code
Alberta Safety Codes Act
Accessibility to City of Edmonton Owned and Occupied Buildings - City of Edmonton Policy C463
CAN/CSA B651.M90 Barrier-Free Design, A National Standard for Canada,
CAN/CSA 3-T515-M85 Requirements for Handset Telephones
City of Edmonton Transportation Master Plan
ETS Accessible Transit Instruction – April 10, 2002
Geometric Design Guide for Canadian Roads – TAC (1999)
Highway Traffic Act RSA 2000 Chapter H-8
National Building Code
Plan Edmonton City of Edmonton Bylaw 11777, as amended

15.1.5 Design References

Accessibility for Elderly and Handicapped Pedestrians, US DOT, 1987
Barrier-Free Design Guide – Alberta Safety Codes Council 1999
City of Edmonton Design and Construction Standards (City Design Standards)
Design Guidelines for Accessible Bus Stops – Alberta Transportation 1994
*Design Guidelines for Pedestrian Accessibility, Alberta Transportation & Utilities 1996
Going Places – Access Needs of Visually Impaired Travelers in Transportation Facilities, CNIB 1997
Manual for Accessibility to City of Edmonton Owned and Occupied Buildings
Light Rail Transit Graphic Standards Manual
TCRP Report on Passenger Loading – Platform lighting Guidelines
Universal Design for Barrier-Free Park Development, City of Edmonton Community Services

***Note:** City of Edmonton Standards govern if they are at variance with Alberta Transportation & Utilities standards

15.1.6 Accessibility Features/ABC References

For the design consultants reference during the design development process an accessibility features checklist is provided starting with Section 15.3. The provision of the list does not relieve the Consultant from ensuring that the accessibility provisions of the applicable codes and related barrier-free guidelines are incorporated into all areas of LRT stations and related ancillary facilities. For a number of items, references are made to the applicable clauses of the Alberta Building Code. The bracketed numbers. (i.e. ABC 3.8.1.3) indicates the ABC reference. If no bracketed numbers are shown then the item is a direct City requirement or preference.

A checklist for Accessibility and Universal Design in Architecture has also been prepared by the Advisory Board on Services for Persons with Disabilities. This checklist is designated Appendix I to this chapter. To ensure the maximum degree of accessibility in City buildings, the City has directed that this checklist be followed by the Consultant along side the checklist detailed later in this chapter, the Barrier Free Design Guidelines, and the Alberta Building Code.

15.2 ACCESSIBILITY POLICIES

Chapter 1, General, Section 1.2.5 of these LRT Design Guidelines states that:

"Barrier-free design will be undertaken for all sites and as determined by the stakeholder involvement process. The design must utilize the following documents or resources to ensure a barrier-free design:

Advisory Board on Services for Persons with Disabilities
Barrier-Free Design Guide, Barrier-Free Design Advisory Committee of the Safety Codes Council and Alberta Municipal Affairs
City Policy C463
Universal Design for Barrier-Free Park Development"

15.2.1 Policy C463 – Accessibility to City of Edmonton Owned and Occupied Buildings

This policy states, in part:

> "The City of Edmonton is committed that all persons will have reasonable access to City of Edmonton owned and occupied buildings. Reasonable access should be provided to all persons, including persons with disabilities. This applies whether the person is an employee, citizen, visitor, official or other."

The main purpose of the policy is to ensure that over time, City owned and occupied buildings are safely useable for and provide reasonable access to persons with disabilities. All new building construction is subject to the provisions of the policy.

A key component of the policy was the establishment of the "Advisory Board on Services for Persons with Disabilities" with the mandate to promote recognition of entitlements and service needs of Edmontonians with disabilities, by facilitating changes in city policy and practice. Edmonton City Council appoints the Board members.

As one of the stakeholders, a Board responsibility is the review of city projects for reasonable access at each of the following five project stages:

- Project/program development
- Design development drawings
- Tender development
- Substantial completion
- Commissioning

Another key component of the policy is a manual titled "Manual for Accessibility to City of Edmonton Owned and Occupied Buildings". This manual outlines the specific procedures and requirements for Policy C463. Section 10 of the manual, Requirements for Reasonable Access, states that "the requirements of the Alberta Building Code shall form the basis of the requirements of the manual".

The Barrier-Free Design Guide was prepared by the Barrier-Free Design Advisory Committee of the Safety Codes Council, with the assistance of Alberta Municipal Affairs. It was developed to assist designers, consultants, builders and other Building Code users in meeting barrier-free design standards and principles. It forms the appendix to the Manual for Accessibility to City of Edmonton Owned and Occupied Buildings. In accordance with City policy the Barrier-Free Design Guide must be used as the main reference in the implementation of the provisions of the ABC.

City Policy C-466, Integration of Persons with Disabilities, has also been adopted by City Council. In part, the policy has been put into place to ensure that the planning, development and provision of civic services to persons with disabilities is in full consideration of their needs and the range of their abilities.

15.2.2 ETS Accessible Transit Instruction

As a supplement to Policy C463, ETS has adopted an instruction that states "the City of Edmonton and ETS are committed to providing an accessible public transit system"

This instruction lists a number of general accessibility principles. These principles apply to ETS employees, public transit vehicles and facilities. A principle that is directly applicable to the LRT system is:

"ETS facilities and equipment will be designed to be accessible to customers with limited mobility and their equipment such as wheelchairs, scooters, canes, walkers, strollers etc."

The Instruction also states that the following accessible features are to be incorporated into all transit facilities:

- At least one power assist or power operated entrance door
- Visual indicators of plate glass windows adjacent to doorways
- Ramp access to the facility
- Curb ramps to facilitate ease of movement to bus stops, in transit terminals, and entry into facilities
- Accessible parking stalls at Park and Ride locations and other ETS facilities
- High contrast edging on stairs, escalator steps and LRT platform edges
- Handrails on all stairways and ramps
- Emergency exits from platform ends are to be accessible and protected by gates
- Elevators in LRT stations and other ETS multi-story facilities must have Braille floor indicators, protruding buttons, oversize lit floor call buttons with Braille, floor arrival bells, handrails, and infrared beams to prevent doors from closing against person or object.
- Non-slip, colour contrasting surface to delineate the LRT platform edge.
- High contrast signage in facilities.
- Accessible bus shelters.
- Heated waiting areas at major transit terminals and LRT stations.
- Train arrival voice announcements at all LRT stations.
- Seating with armrests in LRT stations and major bus terminals.
- DATS loading bays at major transit terminals.
- Enhancements for the use of phones by the hearing impaired (TTY phones, 'call connect' feature on Emergency Phones).
- Enhancements for use of phones and facilities for the sight impaired (Braille numbers and instructions on Emergency Phones, raised line station maps).
- Emergency phones installed in public washrooms and elevators.
- Fare collection equipment will have numerous accessibility features such as voice, Braille, slots and push buttons at heights that are accessible.
- Wheelchair accessible washrooms (hands-free remote access system to LRT Security, light indicators at entrance doors to signal access granted) and
- "Elevator" directional signage throughout LRT stations and entranceways.

The Instruction states that a number of accessible features are also to be incorporated into the transit fleet, wherever possible. Those accessibility features related to LRV's are:

- Public Address systems for announcements
- High contrast edgings on steps and doorways
- Grabstraps, handrails, and stanchions
- Emergency alarm system
- Designated priority seating for those with mobility challenges
- Automated Access Ramp (as described in detail in Chapter 2, Vehicles, Section's 2.3.2.5) and 2.3.3.6).

15.2.3 Stakeholder Groups

In addition to the Advisory Board on Services for Persons with Disabilities (refer to Section 15.2.1) Edmonton City Council has also established the following Boards:

- Edmonton Transit System Advisory Board
- DATS Working Group

These groups are available for review of accessibility design issues as determined by ETS.

15.3 LRT STATION DESIGN

15.3.1 Accessibility Principles

The general design principles applicable to in the design development of a station are stated in Chapter 10, Stations and Ancillary Facilities. Section 10.2. The accessibility related principles are:

- Stations, and their approaches, must facilitate the barrier-free movement of passengers to and from the LRV, and other modes, in the most convenient and cost effective manner possible.
- The application of design guidelines and criteria, standards and practices must accommodate the needs of persons with physical, sensory, and mental disabilities.
- The Consultant should be proactive in the application of barrier-free design solutions that will provide persons with physical, sensory and mental disabilities the same reasonable access to facilities as those who are able-bodied.
- The Advisory Board on Services for Persons with Disabilities is required to review design plans during their development.

In addition to the forgoing, the following principles also apply:

- All areas serving the public must be accessible
- Pathways should be well lit, distinguishable and barrier-free.
- Stations should strive for the same general layout features to permit patron familiarity
- Provide at least one barrier-free entrance at every station.
- In order to access the station platform persons with physical, sensory, and mental disabilities must be provided with the following facilities:
  - Accessible emergency exits at platform ends (Type II stations)
  - Ramps (Type III stations)
  - Elevators (Type I and Type II stations)
- Provide sufficient designated wheelchair stalls to meet the projected demand.

15.3.2 Interior Accessible Routes

In general, interior accessible routes must be designed with the following features:

- Main circulation routes in large open areas should be defined by the use of flooring materials differentiating in colour and texture.
- To avoid possible depth perception difficulties, heavily patterned floors should be avoided, especially in areas where there are elevation changes.
- Finished flooring must be slip resistant.
- Must be wide enough to allow two wheelchairs to pass.
- Where an escalator is provided, an elevator or ramp must also be provided.
- Projections or obstructions must be kept to a minimum.
- Visual indicators on plate glass windows adjacent to doorways must be provided.

Specific requirements are:

- Floor surfaces, walks, ramps, stairs and curb ramps must be stable, firm and slip resistant. Grates must not have any opening larger than 13 mm. Elongated grate openings should be placed so the long dimension is perpendicular to the direction of travel. (ABC 3.8.1.3)
- Provide an unobstructed width of 920 mm (ABC 3.8.1.3). It should be noted however, that this width does not allow a person in a wheelchair to pass another with ease.
- Where an escalator is provided, elevators and/or ramps must also be provided (ABC 3.8.1.4). Access to other levels must be via an interior elevator or ramp. Reliance on exterior walkways to access other interior levels does not meet the intent of the code. (ABC 3.8.1.4)
- Obstructions located within 1980 mm of the floor must not project more than 100 mm horizontally onto the passageways in a manner that would create a hazard for visually impaired persons traveling adjacent to walls. (ABC 3.3.1.9 (3)) Horizontal projections are permitted to be more than 100 mm where it extends less than 680 mm above the floor. (ABC 3.3.1.9(4)).
- A downward change in elevation must be signaled by the use of a 600 mm wide color contrasting tactile warning strip placed 250 mm from the delineated edge (ABC 3.3.1.7 (4)).

15.3.2.1 Ramps

Specific accessibility requirements for ramps are:

- Must be stable, firm and slip resistant. (ABC 3.8.1.3(2))
- The slope must not greater than 1:12 however; ramps with a gradient of more than 1:16 can be difficult for someone with limited upper body strength and can be unsafe to descend especially if covered by snow and ice. Although the Code permits ramps of 1:12 for distances of up to 9 m, gradients of 1:20 are safer and less strenuous for the user (ABC 3.8.3.4(1)). In general, a slope no greater than 1:16 is preferred with rest areas every 9 m.
- Where ramps do not form part of a barrier free path they can be less than 1:12 (ABC 3.4.6.6)
- Provide a width of not less than 870 mm between handrails (ABC 3.8.3.4(1)). However, as this does not allow two wheelchairs to pass a width of 1500 mm is preferred. (ABC 3.8.3.2(2))
- A level area of at least 1500 mm by 1500 mm at top and bottom and intermediate levels leading to a door is required to allow a person an opportunity to stop and rest if necessary (ABC 3.8.3.4(1)).
- Intermediate landings 1200 mm in length must be provided every 9 m along the ramp length to allow a person the opportunity to stop and rest if necessary. (ABC 3.8.3.4(1))
- A tactile warning strip contrasting in colour and texture must be placed at the top of ramps to provide a warning of a downward change in elevation (ABC 3.8.3.4 Appendix)
- Ramps must be equipped with handrails and guards. Protection at sides of ramps must be provided to prevent people using wheelchairs from accidentally going over the edge of a ramp. Curbs are often combined with handrails and guards. (ABC 3.8.3.4)
- Floors or walks having a slope steeper than 1:20 must be designed as ramps (ABC 3.8.3.4)
- Ramps must have a slip resistant finish or provided with slip resistant strips that extend not more than 1 mm above the surface. In most cases, a slightly more abrasive surface than the one being walked on is all that is needed. (ABC 3.4.6.1)
- Handrails on ramps must be 865 – 965 mm from the surface of the ramp. (ABC 3.6.4.6)

- At least one handrail at the side of a ramp must extend not less than 300 mm beyond the top and bottom of the ramp. (ABC 3.4.6.4). Handrails should be terminated by returning the ends into the wall or downwards to reduce the possibility of catching clothing on the ends of the handrail.
- A clearance not less than 40 mm must be provided between the handrail and any wall to which it is fastened. (ABC 3.6.4.6)). This should be increased to 60 mm where a rough texture is used.

15.3.2.2 Stairs

In general stairs must have the following features:

- Treads to be of non-slip surfaces and rounded nosings.
- A distinct visual contrast between the treads and the risers are to be provided including tactile warning cues for the visually impaired.
- The color of the stairway should be different than the surfaces it leads to and from.
- Open risers are not permitted.
- Continuous railings are to be provided on both sides of the stairs.

Specific accessible requirements for stairs are:

- The preferred step run is 305 mm. The absolute minimum run is 280 mm (ABC 3.4.6.7(1)).
- The preferred step rise is 165 mm. The acceptable range is 125 mm to 180 mm (ABC 3.4.6.7(2)).
- Treads and landings of interior and exterior stairs must have a slip resistant finish or provided with slip resistant strips that extend not more than 1 mm above the surface. A slightly more abrasive surface than the one being walked on is all that is needed in most cases (ABC 3.4.6.1(1)).
- Treads and landings of exterior exit stairs more than 10 m high must be designed to be free of ice and snow accumulations (ABC 3.4.6.1(2)).
- Open risers should be avoided where possible. They can be awkward for persons equipped with foot or leg braces (ABC 3.4.6.7).
- Step nosings must have either a radius or a bevel between 8 mm and 13 mm in the horizontal dimension. Nosings that are not properly raked should be avoided as they can cause problems for people using braces where a foot must be dragged up each step (ABC 3.4.6.7).
- Nosing of stairs should be of a contrasting colour with respect to the treads and risers (ABC 3.4.6.7).
- The front edge of stair treads in exits and public access to exits must be at right angle to the direction of exit travel (ABC 3.4.6.7).

15.3.2.3 Railings

Specific accessible requirements for railings are:

- Exit ramps and stairways must have a handrail on at least one side and on both sides if 1100 mm or more in width. (ABC 3.4.6.4(1))
- If the exit ramp of stairway width is greater than 2200 mm then there must be one or more intermediate handrails that are continuous between landings and located so that there will not be more than 1650 mm between handrails. (ABC 3.4.6.4(2))
- Handrails must be continuously graspable along their entire length. (ABC 3.4.6.4(3))
- Handrails must have a circular cross section with an outside diameter between 30 and 50 mm. Any non-circular shape must have a 100 to 155 mm perimeter with the largest cross-sectional dimension not more than 57 mm. (ABC 3.4.6.4(3)). A circular cross-section of less than 40 mm is preferred.

- Handrails on stairs must be 865 to 965 mm vertically from the stair nosing. (ABC 3.6.4.6(4))
- At least one handrail should be continuous through the length of the stairway including landings except where interrupted by a door or newels at changes in direction. (ABC 3.4.6.4). Continuous handrails are relied on by the blind or visually impaired to guide them on stairways. Continuous handrails also assist the elderly.
- Handrails must be terminated in a manner which will not obstruct pedestrian travel or create a hazard. (ABC 3.4.6.4(6)). At least one handrail at the side of a stairway must extend not less than 300 mm beyond the top and bottom of the stairway (ABC 3.4.6.4 (7)). Handrails should be terminated by returning the ends into the wall or downwards to reduce the possibility of loose clothing being caught on the end of the handrail.
- A clearance distance of not less than 40 mm must be provided between the handrail and any wall to which it is fastened. (ABC 3.4.6.4 (8)). This should be increased to 60 mm where the wall has a rough texture.

15.3.2.4 Escalators

In general escalators must have:

- A high contrasting edging
- A warning buzzer if the emergency stop button is being accessed
- Under-lit stairs

15.3.2.5 Passenger Elevators

In general elevators must have the following features:

- The location must be clearly identified by signage
- The floor covering must be slip-resistant and permit easy movement by persons in wheelchairs.
- Upon entering an elevator the controls must be readily available to the person in a wheelchair.
- Braille floor indicators
- Protruding buttons
- Oversized lit floor call buttons with braille
- Floor arrival tones
- Handrails
- Infra-red beam curtain to prevent doors from closing against a person or object
- Emergency phones to the ETS Control Centre (hands free direct dial phones with Braille and lit call connect indicator).
- Security features (refer to Chapter 10 and Chapter 16)

Specific accessible requirements are:

- If there is one or more elevators in a building all stories must be served by at least one elevator sized to accommodate a stretcher 2010 mm long by 610 mm wide. The elevator meeting this requirement must be clearly marked on the main level of the building (ABC 3.5.4.1(1)). The minimum inside dimensions will be 2032 mm x 1295 mm.

  The preferred elevator size is 2032 mm x *1500 mm as this allows a wheelchair to turn around with ease.

***Note:** To allow a wheelchair to turn around with ease it is preferred that an area of 1500 mm by 1500 mm be provided.

- Emergency controls and door operating buttons must be grouped together at the bottom of the control panel. The alarm and emergency stop button must not be less than 890 mm above the floor. The highest car control button should not be higher than 1370 mm above the floor. Other controls may be located where it is convenient to do so.

- Must be equipped with a telephone connected with the ETS PABX System operated out of the ETS Control Centre. The phone should not be located at a mounting height lower than the lowest push buttons and no higher than 1220 mm from the floor. The phone cabinet can be located opposite the control push buttons. It must be identified by the international symbol for telephones in a contrasting colour. The symbols must be at least 38 mm in height and raised at least 0.75 mm. Telephones must be equipped with a volume control.
- Automatic leveling is provided to within 13 mm of the floor level
- Minimum door clear width of 910 mm.
- Door reopening device is required in case the car door is obstructed and must be capable of sensing an object at 125 mm and 735 mm above the floor without requiring contact for activation.
- Door-opening devices must remain effective for not less than 20 seconds.
- The allowable minimum door delay is 4 seconds from the time the doors start to open to the time they start to close if it is a hallway call and 3 seconds if it is an elevator call. This time may be reduced if after operation of the door close button.
- Elevator controls must be readily available from a wheelchair upon entering an elevator.
- Floor registration buttons are to be a minimum 19 mm in size and can be raised, flush or recessed. The full recessed depth when depressed must not be more than 10 mm.
- Arabic numerals must be to the left of the floor buttons and on a contrasting colour background. Markings must be at least 16 mm high and raised at least 0.75 mm. The raised markings may be on the buttons.
- Visual and momentary audible indication must be provided to show each call registered. The visual indication can be extinguished when the call is answered.
- A lit elevator position indicator must be provided to indicate the floor the elevator is stopped at or passing. It must be on a contrasting colour background and at least 16 mm in height.
- Handrails must be provided at a height of 800 mm to 920 mm and spaced 35mm to 45 mm from the wall.
- The illumination level at the elevator control panel must be at least 100 lux.
- Hallway call buttons must be located 1070 + - 25 mm above the floor and must be at least 20 mm in size and mounted one above the other. A visual indication must be provided that will extinguish when the call is answered.
- A lit elevator position indicator must be provided in the hallway to indicate the floor the elevator is stopped at or passing. It must be on a contrasting colour background and at least 60 mm in the smallest direction. An audible signal must be provided when the elevator stops at the landing (once for up; twice for down).

15.3.2.6 Entranceways, Doors and Gates

In general, a station or a transit facility must:

- Provide at least one barrier-free entrance (ABC 3.8.1.2)
- The barrier-free entrance will incorporate automatic door(s). It is preferable that automatic doors slide open parallel with the wall rather than open toward or away from the pedestrian line of travel.
- Automatic doors to be identified with the international symbol for accessibility
- The identification of entrances should be done by using contrasting colours for door frames, handles, etc.
- Entrances must be well lit.

Specific requirements are:

- Every doorway located in a barrier-free path must have a clear width of not less than 800 mm when the door is in the open position (ABC 3.8.3.3)
- The design of door operating devices must not require tight grasping and twisting of the wrist as the only means of operation (ABC 3.8.3.3(3)). It is recommended lever handles be used on doors that are latched. Levers with their handles turned towards the door are less prone to catch the closing of someone passing by.
- Door hardware should be installed between 800 mm and 1065 mm from the finished floor. (ABC 3.8.3.3)
- Doors that provide a barrier-free path of travel at an entrance in buildings of assembly must be equipped with a power door operator. (ABC 3.8.3.3)
- Automatic swing doors should have guardrails and sensing devices.
- For ease of passage of people using wheelchairs and to avoid tripping, raised thresholds should be avoided. Where necessary, they must not exceed 13 mm in height above the finished floor surface. If higher than 6 mm, it should be beveled and be distinguished in from the surroundings with a contrasting colour/brightness (ABC 3.8.3.3).
- The location of the activating device for an automatic door must not interfere with the movement of a wheelchair (ABC 3.8.3.3)
- In the event of a power failure, power-activated doors must be able to be opened manually with a force applied to the handle of not more than 38 N (exterior door) or 22 N (interior door). (ABC 3.8.3.3).

  Note: Greater opening forces are allowable where greater forces are required in order to close and latch the door against the prevailing difference in air pressure on opposite sides of the door (ABC 3.8.3.3)

- An interior door closer must have a closing period of not less than 3 seconds measured from the time the door is at 70 degrees of the open position to when the door reaches the closed position. (ABC 3.8.3.3(9))
- The minimum door height to be provided is 2030 mm (ABC 3.4.3.6(3))
- Minimum clear headroom to be provided below a door closure is 1980 mm (ABC 3.4.3.6(4))

15.3.3 Platform, Public Areas and Amenities

15.3.3.1 Platform Floor

The platform finish floor must have the following features:

- Have a non-slip surface.
- Detectable non-slip warning strips must be placed at LRT platform edges in accordance with the requirements stated in Chapter 10 Stations and Ancillary Facilities, Section 10.4.1.6 and as shown in Figure 10.3.
- For any other barrier-free path of travel, with a downward change in elevation (stairways, escalators, ramp approaches) the color brightness and texture of the flooring must be different from the platform flooring (ABC 3.3.1.7(4)). Install a 600 mm wide tactile warning strip placed 250 mm from the edge for the full width of the access.

Persons using a cane for finding their way rely on tactile changes to surfaces for clues regarding their environment. The grid should feel noticeably different when walked on but should not cause a person to stumble. A grid of truncated domes placed 60 mm apart forming a floor texture can serve as a tactile warning strip.

15.3.3.2 Waiting Areas

In general, the following features should be provided:

- Heated waiting areas
- Train arrival voice announcements and lighted train arrival signs
- Seating with armrests at each seat

15.3.3.3 Public Washrooms

In general, where public washrooms are provided they must:

- Be barrier-free
- Have automatic water controls and flushers on toilets and urinals
- Have controlled access

Specific requirements are:

- The provisions of the ABC 3.8.2.3, and ABC 3.8.3.8 through 3.8.3.12 addresses washroom dimensions, water closet stall design, toilet design, urinal design, lavatory design, design of and locations for grab bars, location of soap and towel dispensers, design of mirrors, and amenities such as coat hooks and change tables for babies.
- Automatic flushers for toilets and urinals in accessible stalls are preferred over hand operated flushing mechanisms.
- Automatic water controls are preferred over lever handle faucets.
- Water should be heated in the temperature range of 45-60 C. Hot water and drain pipes under lavatories must be insulated or otherwise protected where they could be a burn hazard to those using wheelchairs.
- Tilt mirrors are preferred over lowered mirrors since they offer better use for a variety of conditions.
- Require the installation of an access phone on the exterior wall adjacent to the doorway to the washroom.
- Door locking /unlocking will be remotely controlled.

15.3.3.4 Counters

In general, every counter that is more than 2 m long and serves the public must have at least one barrier-free section in conformance with the code (ABC 3.8.3.14).

15.3.3.5 Public Telephones

The following are the general accessibility requirements for public telephones:

- At least one phone in each station must be provided with a build in TTY.
- Volume control
- Pre-programmed emergency numbers in Proof of Payment areas
- Telephone heights and maneuvering space in front of telephones must meet the code requirements as per ABC 3.8.3.15.

15.3.3.6 Emergency Phones

The following are the general accessibility requirements for emergency telephones:

- Hands-free
- Braille identification and instructions
- Written instructions provided to deaf users
- Phone locations must be monitored by CCTV

15.3.3.7 Fare Equipment

In general, Ticket Vending Machines and Ticket Validators must be readily accessible to persons with disabilities and comply with the relevant requirements of the Americans with Disabilities Act (ADA).

The specific accessibility requirements for TVM's are:

- All operable controls should be between 380 mm and 1370 mm of the finished floor from a side reach parallel approach to the TVM.
- Pushbuttons and other operable controls are to be identified with high-contrast, raised lettering at least 16mm high. Braille instructions must also be at least 16 mm high.
- Braille and other instructional information should be no more than 1525 mm from the finished floor
- No objects should protrude more than 100 mm from the finished floor to a height of 2030 mm on the front surface of the equipment.
- The minimum clear space wheelchairs require for a parallel approach to the TVM is 760 x 1220 mm.
- Provides audible voice instructions, upon request by the customer.

The specific accessibility requirements for Validator's are:

- All operable controls should be between 380 mm and 1370mm of the finished floor level from a side reach parallel approach.
- The minimum clear space wheelchairs require for a parallel approach is 760 x 1220 mm.

15.3.3.8 Signage

The *Light Rail Transit Graphic Standards Manual* incorporates handicapped access signage into all wayfinding elements.

All people rely on cues to find their way. In addition to signage, cues can include:

- Lighting – the intensity and distribution of lights used to accent areas and passageways.
- Audio – subtle audible cues such as music or verbal announcements assist with the individual's orientation.

<u>Wayfinding Signage</u>

- High contrast signage is required.
- Signs incorporating the international symbol of accessibility for persons with physical disabilities must be located to indicate the locations of a barrier-free entrance. (ABC 3.8.3.1)
- Washrooms and elevators designed to be barrier-free must be identified with the international symbol of accessibility for persons with physical disabilities. The type of facility that is available must be clearly indicated by the provision of appropriate graphic or written directions (ABC 3.8.3.1).
- Doors and openings that lead from and through spaces the public is permitted to enter must be identified with letters not less than 60 mm high, be raised 0.75 mm above the surface, located 1350 mm above the floor surface and beginning not more than 150 mm from the door openings.

<u>Information Signage</u>

As a general rule, wherever audible signals are used, a lighted visual signal must also be provided.

15.3.3.9 Lighting

Lighting Principles are presented in Chapter 10, Stations and Ancillary Facilities, Section 10.2.7. For convenience they are listed below:

- The lighting color spectrum should be as close to natural light as possible to bring out the true color of objects.
- Lighting should be constant, uniform, and diffused. Glare should be minimized.
- Lighting, particularly interior lighting, should be instant-on to enable immediate recovery after a power outage.
- The lighting design must promote safety by identifying and properly illuminating areas and elements of potential hazard.
- Pedestrian access lighting should provide well-defined walkways, crosswalks, ramps, stairs and bridge corridors.
- Platform edges, shelters, seating areas, fare collection equipment areas, ramps and stairs, LRT and bus loading areas, pedestrian walkways and crossings, parking areas and wayfinding signage must be appropriately illuminated.
- Light trespass into adjacent neighborhoods areas should be minimized.
- Light fixtures and standards should be incorporated into the architectural elements of the stations as much as possible.
- Care should be taken in the design to avoid “light pollution”.
- Light fixtures, luminaries, and related equipment should be selected on the basis of: maximizing standardization across the system, cost effectiveness, durability, ease of maintenance and energy efficiency.

The Design Guidelines for Lighting are presented in Chapter 11 Electrical Systems, Section 11.10.

The following illumination levels are taken from the Lighting Guidelines given in Chapter 11, Section 11.10.4.

- Station Platforms – 200 lux minimum
- Stair nosings - 200 lux minimum
- Elevator cabs - 400 lux minimum
- Exterior walkways/ramps – 25 lux minimum
- Exterior Stairs – 55 lux minimum
- Passenger loading zones and parking lots – 20 lux minimum
- Emergency lighting in tunnels including catwalks – 10 lux minimum

Changes in lighting levels of more than 100 to 300 lux range from one area to the next should be avoided.

Several of the reference documents listed in Section 15.1.5 provides suggestions on illumination levels and should be reviewed by the Consultant. For example, Going Places – Access Needs of Visually Impaired Travelers in Transportation Facilities recommends that the IES suggested levels be increased by 25 to 50%.

15.4 STATION EXTERIOR AREAS

15.4.1 Exterior Accessible Routes

In general, exterior routes such as sidewalks, ramps, pathways etc. will have the following accessible features:

- Provide well-lit, distinguishable barrier-free pathway(s) leading to each barrier-free facility entrance.
- Finish surfaces to be slip resistant
- The pathways will incorporate ramp access where stairs are otherwise suitable
- Curb ramps must be installed at roadway intersections adjacent to LRT stations, provide ramps at all four corners as well as the access points to the platform.

The specific requirements are:

- Curb / cut ramps are to be provided with deep grooves parallel with the slope of the ramp that are detectable with a cane (refer to *City Design Standard*s).
- Not less than 50% of the pedestrian entrances including walkways leading from the LRT property line to the entrances must be barrier-free (ABC 3.8.1.2(1)). However, it is ETS's preference that all access routes used by the public be barrier-free.
- Every barrier-free path of travel must provide an unobstructed width of 920 mm (ABC 3.8.1.3(1))
- Floor surfaces, walks, ramps, stairs and curb ramps located along a barrier-free access route must be stable, firm and slip resistant. Grates must not have any opening larger than 13 mm. Elongated grate openings should be placed so the long dimension is perpendicular to the direction of travel. (ABC 3.8.1.3)
- A well-lit distinguishable barrier-free path must be provided from each-barrier free entrance to an exterior parking area, if exterior parking is provided (ABC 3.8.2.2(1)) The use of lighting, contrasting colours, changes in texture and handrails all help to identify the barrier-free path.
- A barrier-free path must be provided from each barrier-free entrance to at least one parking level if parking is provided in a parking structure. Floors within parking structures served by elevators must be accessible. (ABC 3.8.2.2(1))
- An accessible passageway must be provided to the barrier-free building entrance from sidewalks, roadways or parking areas (ABC 3.8.3.2). Parking should be arranged so that people using wheelchairs do not have to pass behind parked cars
- Walks must have an even surface and provide a continuous and uninterrupted path of travel. (ABC 3.8.3.2). Pre-cast units such as bricks, pavers, concrete slabs or tiles should not be used however, if they are used, all joints should be within 6 mm of flush. In all cases the selected material must be slip resistant. (ABC 3.8.3.2).
- Exterior walks must be at least 1100 mm wide with wheelchair passing area of 1500 mm in width every 30 m. It is preferred, however, that the sidewalk be 1500 mm in width over its entire length to allow two wheelchairs to pass (ABC 3.8.3.2).
- Walks should be easily discernable from the surrounding areas (ABC 3.8.3.2).
- Pathways through parking lots and large plazas should be identified through use of different textures and contrasting colours (ABC 3.8.3.2).
- To aid persons with visual impairments, walkways should be free of any obstructions (examples: directional signs, tree branches, guy wires). Handrails with a maximum projection of not more than 100 mm into the clear area are permitted (ABC 3.8.3.2).
- Any part of a path that has a slope greater than 1:20 must be designed as a ramp (refer to Section 15.3.2.1). A 75 mm curb is required to assist a person who is sight impaired and using a cane. It will also prevent wheelchair wheels from accidentally going over the path edge where the drop off exceeds 75 mm. (ABC 3.8.3.2).

15.4.2 Passenger Loading Zones

The specific requirements are:

- Where a passenger loading zone is provided, provision should be made for side and rear loading/unloading operations from a vehicle. The majority of vehicles transporting persons with disabilities are equipped with side loading platforms.
- Curb ramps are required to accommodate rear loading/unloading (ABC 3.8.3.2(3))
- Passenger loading zones require sufficient space for a wheelchair to turn around (ABC 3.8.3.2)
- A lay-by designated for DATS vehicles is to be provided as part of the kiss and ride drop off area

15.4.3 Parking Lots

In general, the following accessibility features should be provided:

- Barrier-free access to facilities and to bus stops at Transit Centres.
- Passenger loading zones to accommodate the loading/unloading of wheelchairs.
- Designated parking stalls for the self-driving disabled LRT patron as per the self- drive accessible requirements detailed below.
- Sufficient designated wheelchair stalls to meet the projected demand.

The specific requirements are:

- Allocate at least 3 designated parking spaces for the first 100 parking stalls required plus an additional designated stall for each additional increment of 100 parking stalls or part thereof. (ABC 3.8.2.2).
- Accessible parking stalls must be provided near station entrances.
- Accessible parking stalls should be as close to the elevator or the accessible station entrance as possible (ABC 3.8.2.2).
- A mobility-impaired patron should not be required to cross any roads en route to the station entrance.
- Mobility impaired patrons should not be forced to travel behind parked vehicles.
- Travel paths should be free of gratings that would constitute a hazard to a person on crutches or with a cane.
- Designated parking stall signage should include the words “Permit Required” (ABC 3.8.3.2(4)).
- Except for ramps in curbs, travel paths should preferably contain no longitudinal grades steeper than 5% and no cross-slopes steeper than 3%.
- Designated parallel parking stalls must be at least 3.7 m wide, have a firm slip-resistant, level surface, and be clearly marked for the use by persons with disabilities (ABC 3.8.3.2(4)).
- Curb ramps are required to gain access to sidewalks where the sidewalk is raised. (ABC 3.8.3.2)
- Where curbs are used within parking areas, openings to allow unimpeded passage by persons with disabilities using wheelchairs should be provided. The opening should be at least 760 mm wide (ABC 3.8.3.2).
- Curbs of any kind will be more easily detectable by persons whose vision is impaired if colour is used to distinguish curbs from surrounding surfaces, (ABC 3.8.3.2(1))

15.5 TRANSIT CENTRES

The accessibility features of Transit Centres are outlined in the *ETS Transit Centre Design Guidelines* Section 7.0.

15.6 SAFETY AND SECURITY

The provision of safe and secure passage for all users is of primary concern to ETS. Chapter 16 Safety and Security presents the guidelines, and safety and security measures provided on Edmonton’s LRT System.

Appendix I – Checklist for Accessibility and Universal Design in Architecture

aac | ACCESSIBILITY ADVISORY COMMITTEE

Edmonton

CHECKLIST FOR ACCESSIBILITY & UNIVERSAL DESIGN

The City of Edmonton Accessibility Advisory Committee (AAC) has created this checklist to promote the concepts of Universal Design. The Barrier-Free Design Guide provides only a minimum standard for accessibility. With an aging population and increased independence and involvement of persons with disabilities in the community, there is a need to exceed minimum standards for accessibility where possible. For example, many scooters today require a 10-foot turning radius instead of the standard five feet. Strollers for children are larger and require more room for maneuverability.

Good design should incorporate principles of Universal Design, offering solutions as to how spaces can be designed and developed to meet the needs of all users.

The following checklist draws attention to several areas where accessibility can be improved by good design. For additional information or alternate formats, please call 311 or email 311@edmonton.ca.

THE AAC MANDATE:

The Accessibility Advisory Committee provides advice and recommendations to City Council about facilities and other infrastructure, programs, services, activities and policies, for the purpose of improving the City's livability, inclusiveness and accessibility for individuals with disabilities.

LEGEND

Code (required)

Best Practice

Physical Access

Blind or Low Vision Access

Deaf or Hard of Hearing Access

Cognitive Limitations Access

CHECKLIST FOR ACCESSIBILITY & UNIVERSAL DESIGN

1. PARKING AREAS		Y/N N/A
♿	1.1 Designated accessible parking spaces located closest to accessible entrance	
♿	1.2 Barrier-free unobstructed path of travel (minimum width of 1200mm) from parking area to building entrance (clear of snow, garbage cans, sign posts and other obstacles; pathway well lit) not behind vehicles	
♿	1.3 Curb ramp to sidewalk located between parking spaces	
♿	1.4 Access aisle painted on pavement between parking spaces	
♿	1.5 Accessible parking symbol painted on pavement at the entrance of each stall	
♿	1.6 Vertical accessible mounted sign located near the centre line of each designated stall (minimum 1500mm/60” from ground to mid sign, max 2500mm/98” high)	
♿	1.7 Number of designated accessible parking spaces per number of parking stalls: 1 accessible stall per 2-10 spaces, 2 per 11-25 spaces, 2 per 26-50 and 4 per 51-100. One additional accessible stall for each additional increment of 100 or part thereof	
♿	1.8 Passenger loading zones need: an access aisle not less than 1500mm wide/6000mm long adjacent and parallel to the vehicle pull-up space, a curb ramp where there are curbs between the access aisle and the vehicle pull-up space and a clear height of not less than 2750mm at the pull-up space and along the vertical access and egress routes	

CHECKLIST FOR ACCESSIBILITY & UNIVERSAL DESIGN

2. ENTRANCES		Y/N N/A
	2.1 Barrier-free path of travel to entrance	
	2.2 Signage at all non-accessible entrances should clearly indicate location of accessible entrance	
	2.3 Doorway clearance is 800mm/31.5” when the door is in the open 90 degree position (920mm/36” preferred)	
	2.4 Door operating device should not require tight grasping or twisting of the wrist (doors should have lever handles)	
	2.5 The primary entrance is accessible (automatic sliding doors are optimal; power doors with large paddle/push plate is the next best alternative)	
	2.6 If entrance is through doors in a series, leave enough room (1200mm/47” plus the width of the door) for a wheelchair to occupy the vestibule while opening the 2nd door	
	2.7 Automatic door button is 800mm/31.5”-1200mm/47” from the ground and is located 1200mm/47” back from the door. Large well marked opener/button	
	2.8 Level, or beveled doorway threshold (maximum of 13mm/0.5” rise)	
	2.9 Color contrast to identify doorway threshold, frame or entrance. Corridors should be 1100mm/43” (recommend 1800mm/71”)	

3. SIGNAGE		Y/N N/A
	3.1 Facilities and services for persons with disabilities identified with appropriate symbols (e.g. availability of assistive listening devices)	
	3.2 Signage available in symbol form for those with visual processing difficulties or who are unable to read	
	3.3 Signage includes braille as well as large print, high colour contrast tactile lettering that is a mix of caps and lower case letters and be processed to prevent glare.	

CHECKLIST FOR ACCESSIBILITY & UNIVERSAL DESIGN

3. SIGNAGE		Y/N N/A
	3.4 General and way-finding signage consistent in design and easily identifiable	
	3.5 Braille signage mounted at appropriate height (chest level) and location	
	3.6 Signage font in Sans Serif (e.g., Verdana, Arial) for reading ease. Signage should be 1350mm/51” high from floor level and not located on a door (should be 150mm/6” from the door frame). If tactile signage is installed it should be 1200mm from floor level (building directories should be tactile)	
4. STAIRS/ESCALATORS		**Y/N N/A**
	4.1 Slip-resistant, tactile finish or strips contrasting in color and texture on all landings, treads edges, and the beginning and end of a ramp	
	4.2 Tactile strips in contrasting color on all stair nosings. Step demarcation in yellow on sides and back of escalator steps	
	4.3 Steps for stairs have a rise between 125mm and 180mm and a run of not less than 280mm (should not be open between steps)	
	4.4 Avoid single isolated steps	
5. ELEVATORS		**Y/N N/A**
	5.1 Doors have clear colour contrast from door surroundings	
	5.2 Location of elevators clearly identified at main entrance	
	5.3 Preferred dimension of elevator car to allow for optimal turning radius of 1500x1500mm/60x60” with elevator door at least 910mm/36” wide (one elevator has inside dimensions that will accommodate a stretcher at 2010mm/79” long and 610mm/24” wide)	

CHECKLIST FOR ACCESSIBILITY & UNIVERSAL DESIGN

5. ELEVATORS		Y/N N/A
	5.4 Elevator buttons and emergency controls mounted at accessible height (1045mm/41”-1095mm/43” from ground)	
	5.5 Elevator buttons and emergency controls incorporate large print tactile numbers and Braille mounted in a raised fashion (not flush or recessed)	
	5.6 Braille and tactile numbers placed on both sides of door jams at appropriate height to identify floor level	
	5.7 Visual indicator in elevators to indicate “help on the way” for use in an emergency	

6. RAMPS		Y/N N/A
	6.1 Ramps are used for any slope steeper than 1 in 20 in a path of travel	
	6.2 Preferred maximum slope is 1 in 16 (1 in 12 in AB building code)	
	6.3 Ramp width minimum 1500mm/60” to allow 2 wheelchairs to pass (or wheelchair and pedestrian, stroller,etc.); 870mm/34” min between handrails. Level landings/resting areas provided at 9m/10yd intervals along ramp	
	6.4 Minimize or avoid tight turns or switch-backs	
	6.5 Strong color contrast and tactile surfacing on all ramp landings and a 15mm/0,6” wide strip in contrasting color and texture at the top of ramp to warn users of a change in elevations	
	6.6 Landings designed to accommodate larger chairs and scooters (able to open door without backing onto ramp). Landings must be min 1200mm/47”long	

CHECKLIST FOR ACCESSIBILITY & UNIVERSAL DESIGN

7. HANDRAILS		Y/N N/A
	7.1 A stairway should have a handrail on at least one side but if it is 1100mm or more wide it shall have handrails on both side and are continuously graspable. Ramps should have handrails on both sides (recommend handrails on both sides of stairwell regardless of width). Handrails should have a diameter not less than 30mm/1.18” or more than 43mm/1.69”	
	7.2 Handrails in contrasting color to wall or surrounding area	
7. HANDRAILS		**Y/N N/A**
	7.3 Handrails provided at two heights with unobscured view between. Handrail height should be 865mm/34” and no more than 965m/38”	
	7.4 Handrails extend horizontally beyond last stair and terminate to wall or ground	
8. WASHROOMS		**Y/N N/A**
	8.1 Single door entrance is optimal	
	8.2 For washrooms without entrance door, there is only one turn with clear corner so persons who are blind do not become disoriented	
	8.3 Proper signage located outside entrance and cubicle door	
	8.4 Sinks, garbage cans, etc. located around perimeter rather than in the centre of the room	
	8.5 Accessible sink (minimum knee space of 735mm/29”) with soap and towel dispenser close to sink at preferred height of 1200mm/47” (to wash and dry hands prior to wheeling); include low mounted or tilt mirror. Include low mounted or tilt mirror 1000mm/39” above floor and insulate any exposed pipes	

CHECKLIST FOR ACCESSIBILITY & UNIVERSAL DESIGN

8. WASHROOMS		Y/N N/A
	8.6 ACCESSIBLE CUBICLE: • minimum 1700mm x 1500mm/70 x 60” • door that swings outward so person in wheelchair can close it independently • equipped with door pull handle, coat hook, grab bars at appropriate height and placement • can be locked from the inside with a large, sliding latch (not thumb-turning) • toilet paper reachable without leaning too far off toilet • accessible toilet height between 400mm-460mm/16”-18” • at least one urinal should have a vertically mounted grab bar installed on each side	
	8.7 Self-contained,unisex/family washroom available, with proper signage provided in an accessible location (allows for any individual requiring assistance to be accompanied by a companion or attendant)	
9. INTERIOR BUILDING ELEMENTS		**Y/N N/A**
	9.1 Public and emergency phones mounted at an accessible height with a minimum of 865mm and a maximum of 1370mm above the floor	
	9.2 TTY (built in typewriter) phone for users who are Deaf or hard of hearing (VRS, VRI are options to explore)	
	9.3 At least one drinking fountain at accessible height (610mm/24” from ground preferred) spout located near front, controls either automatic or easily operated, cane detectable. Proper knee space below	
	9.4 One accessible section of counter in all areas that serve the public. A barrier-free counter surface shall not be more than 865mm/34” above the floor	
	9.5 Shelving, coat hooks and light switches at an accessible height	

CHECKLIST FOR ACCESSIBILITY & UNIVERSAL DESIGN

9. INTERIOR BUILDING ELEMENTS		Y/N N/A
	9.6 Space for persons using wheelchairs to sit/park in all public seating areas, including companion seating (without blocking walk through areas)	
	9.7 Level wheelchair seating area (in theatres, lecture halls, sports arenas etc), to also include companion seating and unobstructed views	
	9.8 Glass doors or partitions include a contrasting strip of color across at eye-level	
10. ALARM SYSTEMS/EMERGENCY EXITS		**Y/N N/A**
	10.1 All alarm systems to include an audible and visual signal (e.g., flashing light)	
11. FURNITURE		**Y/N N/A**
	11.1 Furniture should only be placed outside the main path of travel (inside or outside) and is detectable by someone who uses a cane	
	11.2 There should be good colour contrast between street furniture and background surfaces (generally, grey colours should be avoided as they blend into the general background)	
	11.3 Variety of benches should be provided (some including a back and an arm rest)	

INCREASED ACCESSIBILITY TRANSLATES INTO AN INCREASED CLIENT BASE

Refer to the **BARRIER-FREE DESIGN GUIDELINES** for details regarding appropriate dimensions. The Barrier-Free Design Guide is available for a fee from the Safety Codes Council by calling **780 413 0099**

PHONE 311
FAX (780) 577 3525
WEB edmonton.ca/accessibility

@cityofedmonton
facebook.com/AACyeg
@AACyeg

LRT DESIGN GUIDELINES

Chapter 16

2017 EDITION – Revisions Tracking Form

Section	Reference	Revision General Description	Issue Date
		NO UPDATES FROM 2011 EDITION	July 2017

16.0 SAFETY AND SECURITY

		Page
16.0	**SAFETY AND SECURITY**	**1**
16.1	GENERAL	1
16.1.1	Introduction	1
16.1.2	Abbreviations, Acronyms, Definitions	1
16.1.3	Applicable Codes, Standards, Regulations, Design References	1
16.2	SAFETY AND SECURITY GENERAL PRINCIPLES AND GUIDELINES	2
16.2.1	Safer City Principles and Guidelines	2
16.2.2	General Guidelines for all Transit Facilities	2
16.2.3	LRT Facility Interior and Exterior Access Routes and Areas	3
16.4	LRT SYSTEM SAFETY AND SECURITY FEATURES	4
16.4.1	Surveillance	4
16.4.2	Stations/Facilities	6
16.4.3	Station Exterior Areas	8
16.4.4	LRT Right-of-Way	8
16.4.5	Light Rail Vehicles	9
16.4.6	Ownership, Maintenance and Management	10

16.0 SAFETY AND SECURITY

16.1 GENERAL

16.1.1 Introduction

The primary purpose of this chapter is the presentation of principles, guidelines and required safety and security measures for LRT passengers, service and maintenance staff in the following LRT facilities:

- Stations
- Exterior site areas including walks/pathways, parking, and drop-off areas
- LRT ROW
- LRV's

The security of LRT facilities and equipment, including the prevention of losses through burglary, damage and vandalism are addressed, in part, by the surveillance measures outlined in Section 16.4.

LRT systems fire/life safety requirements as a result of building code requirements (exiting, fire alarm / detection, smoke removal systems, sprinklers, train control) are addressed in other chapters or by direction to an applicable code.

Safety requirements related to traction power, signals, facility structural, electrical, and mechanical design, and barrier-free design are addressed in the chapters covering those particular topics in the Guidelines.

ETS has initiated the APTA developed and sponsored Safety Management Audit Program. Details of the Audit Program goals are provided in Chapter 1 General, Section 1.5.

16.1.2 Abbreviations, Acronyms, Definitions

ABC	Alberta Building Code
*CPTED	Crime Prevention Through Environmental Design
NBC	National Building Code

***CPTED** is defined as follows: "the proper design and effective use of the built environment can lead to a reduction in the fear and incidence of crime and an improvement in the quality of life".

***Note:** The source of this definition is the United States National Crime Prevention Institute.

16.1.3 Applicable Codes, Standards, Regulations, Design References

ABC/NBC
Barrier-Free Design Guide – Alberta Safety Codes Council
City of Edmonton Zoning Bylaw #12800 – Regulation 58 General Performance Standards for a Safe Physical Environment
City of Edmonton Design and Construction Standards (*City Design Standards*)
Crime Prevention Through Environmental Design in Parking Facilities CPTED – Research Brief, National Institute of Justice, April 1996
ETS Transit Centre Design Guidelines, Section 6.0, Safety and Security Features
ETS Safety and Security Information Brochure
Design Guide for a Safer City – City of Edmonton Sustainable Development Department – 1995
*Moving Forward: Making Transit Safer for Women – Toronto Transit Commission 1989

Transit Security Best Practices Review: A Strategic Approach for the Future - LEA Consulting, June 2004

***Note:** Moving Forward document provides a Personal Security Minimum Criteria List.

16.2 SAFETY AND SECURITY GENERAL PRINCIPLES AND GUIDELINES

An introduction and preamble to LRT Safety and Security principles is provided in Chapter 1, General, Section 1.2.6 of these LRT Design Guidelines.

16.2.1 Safer City Principles and Guidelines

The Design Guide for a Safer City is a City Council approved document prepared by the Planning and Development Department. It provides suggestions on measures that can be used to provide a safer urban environment.

The following broad principles, supported by a number of guidelines, are given in Section 2 of the Design Guide for a Safer City:

Awareness of the Surrounding Environment

The ability to see and to understand the surrounding environment through unobstructed sightlines, adequate lighting and pointing out possible situations to avoid confined and hidden areas.

Visibility by Others

The ability to be seen by others, reducing isolation, improving the land use mix, intelligent use of activity generators, and creating a sense of ownership through maintenance and management of the built environment.

Finding Help

The ability to communicate, find help, or escape when in danger through improved signs and design.

16.2.2 General Guidelines for all Transit Facilities

Section 3 of the Design Guide for a Safer City, discusses a number of safety and security concerns and presents specific guidelines for transportation elements including surface and below grade transit stops parking, sidewalks, and pedways.

Those guidelines for transit stops (refer to Design Guidelines for Safer City, Section 3.1.6) are summarized below for the Consultant's convenience:

Sightlines

Transit Riders at transit stops / shelters and entrances to LRT stations should be clearly visible from streets and buildings. Any wall, berms, bushes, hills, power boxes or solid fences that block the view should be eliminated, modified or the transit stop / shelter should be relocated. Advertisement on bus shelters should be relocated to ensure visibility of transit users.

Avoidance of Entrapment Spots

Nearby entrapment stops created by landscaping or built form should be eliminated, modified or the transit stop / shelter should be relocated.

Signs and Information

Passenger information signs should indicate route schedules and provide security/safety contact information for appropriate authorities (e.g. Transit Watch information).

Reduce Isolation

Bus stops and LRT entrances, where possible, should not be adjacent to isolated areas such as large parking lots, vacant land, alleys, ravines, or buildings set back from the street.

*Bus Shelter Design

Design to reduce the possibility of entrapment. Provide vandal resistant material.

***Note:** These guidelines apply to shelters on Type III station platforms as well.

Lighting

Areas adjacent to transit stops should be well lit, however shelters should not be over-lit such that they make the users feel uncomfortable.

Maintenance

Shelters and transit stops should be well maintained.

Formal Surveillance

Measures should be taken to improve the ability of transit drivers to respond to dangerous situations, e.g. through two way communications or a panic alert button. Drivers should be trained to respond to emergencies.

All LRT stations should have video, CCTV, and / or other forms of formal surveillance.

Patrols

Transit Security personnel and Police should be made aware of problematic transit stations or stops.

16.2.3 LRT Facility Interior and Exterior Access Routes and Areas

16.2.3.1 Sightlines

It is important to be able to clearly see what is ahead along a given travel route. The line of sight should not be interrupted by sharp corners, walls, earth berms, fences, bushes, garbage cans, signs, or pillars. Where grade separation and landscape screens may be required for functional or aesthetic reasons, they should be assessed against the potential for risk to personal safety.

Factors to consider are:

- Ensure sightlines are considered from appropriate heights and angles including pedestrian (adult or child), vehicle or wheelchair heights.
- Visibility – unobscured landscaping, open perimeters edges, see-through structures
- Dead-ends must be avoided at all times.

16.2.3.2 Predictable Routes, Entrapment Areas, and Isolation Points

Predictable routes offer no escape alternatives for pedestrians. An attacker can predict where pedestrians will end up once they are on the path. Examples of predicable routes are pedestrian tunnels, overpasses, escalators and staircases. Predictable routes are of particular concern when they are isolated or when they terminate in entrapment areas. Entrapment spots can be small, confined areas near or adjacent to well-traveled routes that are shielded on three sides by some barrier, such as walls or bushes. Isolated areas can be those that have limited activity such as parking lots, parkades and pathways.

Factors to consider are:

- Ensure visibility by providing clear sight lines
- Introduce surveillance measures

- Consider the introduction of activity functions
- Provide convenient emergency phones and/or panic hardware
- Provide appropriate security lighting

16.4 LRT SYSTEM SAFETY AND SECURITY FEATURES

This section describes the specific LRT passenger orientated safety and security features that are required in the design of the system elements and components. References are made to the corresponding chapter of these Guidelines for additional considerations.

16.4.1 Surveillance

Surveillance measures, both formal and informal are used to manage and maintain security. Natural surveillance should be encouraged through the placement of physical elements, activities and people to maximize visibility in accordance with the principles and criteria provided earlier in this chapter.

Formal surveillance including communication equipment is also necessary and should complement and improve upon the natural surveillance system.

16.4.1.1 ETS Control Centre

The communications hub for the Edmonton LRT System is the ETS Control Centre located at Churchill Station. It houses the amalgamated functions of LRT Operations, Bus Operations and Security to allow for the efficient dispatching of staff resources. Formal surveillance is performed from this location. Chapter 8, Communications and Control provides the design guidelines for the ETS Control Centre.

16.4.1.2 CCTV

The Edmonton LRT System is equipped with a closed circuit television surveillance system that assists in the management of train operations, public safety and security. It is comprised of video imaging, processing, display, and recording equipment along with its own dedicated video transmission system. Cameras are remotely controlled from the security area located at the ETS Control Centre.

The CCTV surveillance system serves two distinct functions defined as follows:

Operational needs are those requirements deemed necessary for the safe and orderly dispatch of passengers. Monitoring is carried out for the purpose of ensuring the safe movement of people in both normal and crush conditions.

Security needs are those requirements deemed necessary for protection of assets, prevention of vandalism, and the safe passage of passengers and the general public.

Camera coverage is required for the following security sensitive areas:

- Entrances to cash vaults
- Fare equipment
- Continuous coverage of all platform areas
- Emergency telephones
- Elevator / escalators
- All entrance doors
- Washroom entrance doors
- Tunnel portals
- Continuous coverage of pedway entrances and exits to all levels
- Continuous coverage of walkway entrances and exits to all levels
- Continuous coverage of stairwell entrances and exits to all levels

Camera coverage should be provided with the objective of eliminating all blind or hidden areas.

Station approach access routes and adjacent parking and loading areas also require coverage. The appropriate infrastructure should be added to light standards to allow for possible camera installation. Activity should be identifiable for a distance of up to 45 m.

Chapter 8, Communications and Control, Section 8.9 CCTV, provides the guidelines and criteria to be used in the design of the Closed Circuit Television System for future LRT extensions along with an overview of the existing system and related components.

16.4.1.3 Telephone Systems

The following telephone systems are provided on the Edmonton LRT System and are available for public use:

- Local Phones
- Emergency Phones
- Elevator Emergency Phones
- Washroom Access Phones
- Information Phones
- Public Pay Phones

Emergency Phones are generally located on the station platforms next to information panels, seating areas and elevators, on station mezzanine levels in paid fare areas close to information panels and fare equipment.

Emergency phones must be readily identifiable through the use of high visibility color/lettering/ markings. Each phone has a direct connection to the ETS Control Centre and is monitored by CCTV. When a call is placed a video recording is activated at the Control Centre.

Direct access Pay Phones are located in the proof of payment areas of a station. They provide coin free calling button access to 911, 611, 411, 0 and ETS Security at ETS Control Centre.

Chapter 8, Communications and Control, Section 8.6,Telephone Systems, provides the guidelines and criteria to be used in the design of the Telephone System for future LRT extensions.

16.4.1.4 Public Address (PA) and Variable Message (VMS) Systems

Voice paging announcements are required for ETS LRT Security and Operations messages to the LRT patron.

All stations on the Edmonton LRT System are equipped with amplified public address voice messaging systems. As a minimum each station should have speakers at the platform level.

The loudspeakers operate in a zoned manner to allow individual area announcements as well as all – call general announcements from dedicated telephone sets at the ETS Control Centre.

Chapter 8, Communications and Control, Section 8.7, Public Address (PA) and Variable Message (VMS) Systems, provides the guidelines and criteria to be used in the design of the PA System for future LRT extensions.

16.4.1.5 Manned Security Patrols

Security Officers patrol the entire LRT system on a continuous basis during operating hours using an “intelligence-led” model for optimal coverage with limited resources. Security Officers and Transit Inspectors are equipped with two-way radios. They can contact the ETS Control Centre at Churchill Station if emergency assistance is required.

16.4.2 Stations/Facilities

16.4.2.1 Architectural Treatment

The choice of surface treatments and construction materials should take into consideration safety, budget, practicality and maintenance. In general:

- Materials should be resistant to damage.
- Consideration should be given to textured surfaces to discourage graffiti.
- Wall materials should be utilitarian but not be so rough that they could cause injury to individuals.
- Low ceilings should be avoided, they are easily damaged and vandalized.

Reference should also be made to Chapter 10, Stations and Ancillary Facilities (Section 10.2.6 for additional architectural principles and Section 10.11 for materials and finishes), and Chapter 15 - Accessibility.

16.4.2.2 Corridors/Passageways/Entranceways

Refer to Section 16.2.3 for sightline and entrapment requirements.

16.4.2.3 Exiting

All emergency exiting must conform to the latest editions of the National Building Code and the Alberta Building Code. For other exiting considerations refer to Chapter 10, Stations and Ancillary Facilities, Section 10.3.3.

16.4.2.4 Non Public Restricted Zones

Prevent public access to potentially unsafe areas through the provision of:

- Gates, fences
- Locking gates/remote controlled doors with status indicators
- Intrusion alarms, motion sensors/detectors
- Increased gradients (steepen areas) to prevent climbing
- Landscaped and/or appropriate surface treatment to separate and delineate travel corridor
- C-Cure door access System – refer to Chapter 8, Section 8.4 Security

16.4.2.5 Vertical Circulation Elements

All stairs, escalators, elevators, passageways, etc., must be located to provide safe convenient, direct access to and from the station.

<u>Passenger Elevators</u>

For security reasons, at least one transparent side must be provided in an elevator car at each stop position. Vandal proof materials must be used as much as possible. Lighting fixtures must have protective mesh or screening (refer to Chapter 10, Stations Section 10.3.4.5).

All elevators must be equipped with a hands-free direct dial telephone that connects with the ETS PABX System operated out of the ETS Control Centre at Churchill Station. The telephone must include Braille directions plus a lit call connect indicator.

Elevators should have the provision to be access controlled from the security monitor room at the ETS Control Centre.

For additional design considerations and criteria, refer to Chapter 10, Stations and Anc. Fac. Section 10.3.4.5 and Chapter 15, Accessibility Section 15.3.2.5.

16.4.2.6 Public Washrooms

Public washrooms are to be provided with emergency lighting to provide passenger safety during local power failures. The locking and unlocking of the washroom doors must be remotely controlled.

Refer to Chapter 10, Stations and Anc. Fac. Section 10.4.4.5 for additional design considerations and criteria.

16.4.2.7 Lighting

Lighting is a critical security feature. The lighting design must provide the following:

- Adequate and uniform light levels in each area. Avoid shadows created by weak and uneven lighting.
- The nighttime light level must be high enough to allow the transit patron to detect, recognize, and identify objects and events.
- Ample lighting in vulnerable areas. The lighting should avoid spotlighting points, which leave surrounding areas dark.

Lighting Principles are stated in Chapter 10, Stations and Ancillary Facilities, Section 10.2.7. Lighting design guidelines that include illumination levels for various public areas are contained in Chapter 11, Electrical Systems, Section 11.10.

All station areas and rooms regularly accessed by the public or staff (i.e. station platforms, stairways, underground pedestrian access, utility rooms, communication/electrical/mechanical rooms, washrooms etc.)are to be provided with emergency lighting to provide occupant safety and assist in maintaining scheduled services during local power failures. For Emergency Lighting and Power Sources, refer to Chapter 11, Electrical Systems Section 11.10.7.

16.4.2.8 Acoustics and Vibration

Unnecessary or conflicting noises create confusion and causes difficulties when trying to deal with safety and security issues such as listening to the public address system or using help phones.

- Acceptable noise and vibration levels to be established. Refer to Chapter 14, Impact Mitigation, Aesthetics, ROW Control for guidelines related to noise and vibration.
- Acoustical characteristics with the objective reducing the echo effect should be considered in the facility design stage.

16.4.2.9 Directional and Informational Signage

Well designed / located signs and maps contribute to a feeling of security.

They should:

- Be strategically located and plainly visible from the reader's height.
- Provide clear and consistent messages and are easy to understand.
- Be consistent in design.

Refer to Chapter 10, Stations and Ancillary Facilities, Section 10.10 for Information Signage and Graphics guidelines.

16.4.2.10 Fare Equipment

For guidelines pertaining to Fare Equipment refer to Chapter 10, Stations and Ancillary Facilities, Section 10.5.

16.4.3 Station Exterior Areas

Sidewalks, pedways, parkades and surface parking lots require special consideration related to access and should be handled through judicial placement of entrances/exits, adequate signage, lighting, landscaping and fencing.

The following guidelines are applicable to the following exterior areas:

Sidewalks and Pathways

- Provide the most direct routing to station entrance.
- Ensure that the illumination levels are in accordance with Chapter 11, Section 10.4.

Passenger Loading Zones

- Place in close proximity to station entrance.
- Avoid routing passenger loading or unloading vehicles through the park and ride areas.
- Ensure that the illumination levels are in accordance with Chapter 11, Section 10.4.

Parking Lots including circulation and access roadways

- Avoid conflicts between vehicular and pedestrian and bicyclist traffic.
- Provide drop-off and short term parking in close proximity to and visible from the station platform and entrances.
- Avoid dead-end aisles.
- Ensure that the illumination levels are in accordance with Chapter 11, Section 10.4.
- Self drive accessible parking stalls to be in accordance with Chapter 18, Section 18.7.3.4.

Refer to Chapter 18, Streets Design for additional design considerations and criteria.

Landscaping

Refer to Chapter 14, Impact Mitigation, Aesthetics, ROW Control, and designated references, for safety and security considerations in LRT landscape design.

Fencing

For the security and safety of the LRT patrons and their vehicles surface LRT park and ride lots must be fully fenced. Fencing is to be installed in accordance with Chapter 14, Impact Mitigation, Aesthetics, ROW Control, Section 14.4. Reference is also made to Chapter 18 Streets Design, Section 18.9. All metal fencing must be grounded.

16.4.4 LRT Right-of-Way

16.4.4.1 Access

The design of LRT facilities must permit the safe evacuation of passengers in the event of a train breakdown and/or catching fire. This may require the installation of catwalks (walkways/refuge areas) stairs, etc., especially in tunnels to enable passengers to leave the train safely.

In addition, emergency lighting must also be provided for patron safety in enclosed tunnels exceeding 100 m in length from portal to portal and in all enclosed tunnels where the portal is not within the line of sight.

Safe access along the open tracks during LRT operations must also be provided. Walkways/ refuge areas are to be provided on each side of the trackway within the LRT ROW. Where absolutely necessary, both walkways/refuge areas may be replaced with a single walkway/refuge area 600 mm wide between each set of tracks. Refer to Chapter 3, Clearances and ROW for additional guideline criteria and figures showing the walkway/refuge area requirements.

16.4.4.2 Pedestrian at-grade Track Crossings

Chapter 18, Streets Design, Section 18.5 outlines the analysis process associated with determining appropriate safety measures at both vehicular and pedestrian grade crossings. Chapter 5, Trackwork, Section 5.5 provides the infrastructure requirements for the physical track crossing for both types of grade crossings.

16.4.4.3 Land Use Mix or Activity Generators

Land use mix and activity generators help create spaces that promote multi-use by bringing into a space different types of positive activities. Mixed uses should be compatible with one another and with the community in order to encourage activity, natural surveillance and contact among people during the day and evening.

- Spaces that support positive usage encourages natural surveillance and greater safety.
- Provision of community gathering areas.
- Art provides a focus and encourages people to stop or take notice.

16.4.5 Light Rail Vehicles

The Consultant should refer to Chapter 2, Vehicles for the general characteristics of Edmonton's LRV. Safety and Security features that are incorporated are:

Red Emergency Alarm Handles

Handles are located at alternate doors on the LRV. Pulling handle activates an emergency signal to the Operator. The Operator can then communicate two-ways with the passengers.

Yellow Touch Strip Passenger Emergency Alarms

A passenger touching the strip activates two-way communication with the Operator.

Intercom System

Each car has an Operator controlled one-way public address system that can be used for exterior or interior announcements.

Automatic Voice Announcements

Provide information to the passenger on station stops.

Radio System

On board two-way radio system is housed in the cab of the LRV and can be used by the Operator to communicate with the ETS Control Centre.

Safety Glass

Safety glass is provided in all LRV windows.

Door Control

Can be operated by the passenger or the LRV Operator.

Automatic Train Stop

Refer to Chapter 7, Signals Section 7.3.4.2, Speed Control.

LRV Camera System

The new SD160 LRV's will have a suite of cameras monitoring and recording activity both in the vehicle's passenger compartment, and the external areas to the front and rear of the vehicle. The SD160 motorman will be able to select and monitor any of the cameras within the vehicle consist.

16.4.6 Ownership, Maintenance and Management

LRT property should be well maintained to create a perception of responsible ownership and the provision of a safe and secure environment. Shared spaces will require consistent maintenance and management policies and agreement standards.

Specific requirements are:

- Prompt attention to cleaning, maintaining/upgrading of the property (where required)
- Prompt removal of graffiti
- Well placed and well maintained garbage receptacles
- Prompt removal of snow and ice.

LRT DESIGN GUIDELINES

Chapter 17

2017 EDITION – Revisions Tracking Form

Section	Reference	Revision General Description	Issue Date
		NO UPDATES FROM 2011 EDITION	July 2017

17.0 UTILITIES

		Page
17.0	**UTILITIES**	**1**
17.1	GENERAL	1
17.1.1	Introduction	1
17.1.2	Applicable Codes, Standards, Practices and Reference Guidelines	1
17.1.3	Ownership	1
17.2	GENERAL DESIGN GUIDELINES	3
17.2.1	All Utilities	3
17.2.2	Utilities Impacted by LRT Construction	3
17.3	RESPONSIBILITIES AND COORDINATION REQUIREMENTS	4
17.3.1	Process Overview	4
17.3.2	LRT Utility Design Consultant	4
17.4	NOTICE REQUIREMENTS	6
17.5	LRT UTILITIES	6
17.5.1	General	6
17.5.2	Utility Service Connection	6
17.5.3	Utility Placement At-Grade Trackway	6
17.5.4	Utility Placement in Underground Tunnels or Structures	6

17.0 UTILITIES

17.1 GENERAL

17.1.1 Introduction

This chapter presents the design guidelines for the following:

- The relocation, adjustment, or abandonment of existing utilities within existing or proposed LRT right-of-ways.
- The placement of new utilities across or adjacent to the LRT ROW.
- The placement of utility services that are required for the operation of any new or upgraded LRT facility.

Utilities include those that are owned by the City of Edmonton civic departments, public utility corporations, private companies, other governmental agencies, and utility services to adjacent private properties.

17.1.2 Applicable Codes, Standards, Practices and Reference Guidelines

All utility work must be designed in accordance with the applicable standards and criteria established by the utility owner/service provider and the standards and criteria of the local jurisdictional authorities, as appropriate.

In reference to a standard, the following abbreviations and acronyms are used to denote the organization that issues that standard or regulation.

API	American Petroleum Institute
AWWA	American Waterworks Association
ASC	Alberta Safety Code Act
CGA	Canadian Gas Association
CSPI	Corrugated Steel Pipe Institute
EAPUOC	Edmonton Area Pipeline and Utility Operator's Committee
IOA	Insurer's Advisory Organization
ULC	Underwriters Laboratories of Canada

The abbreviations for other requirements that are frequently referred to are;

TESP	Transportation Electrical Services Plan (refer to Section 17.1.3.2)
ULA	Utility Line Assignment permit (per City of Edmonton *Bylaw #12846)

***Note:** Bylaw #12846 is the Regulation of Work and Equipment Installation on City Lands. It requires any person who wants to do utility work on Municipal Rights of Way to apply and obtain the required permits.

The City of Edmonton has prepared a Design and Construction Standards Manual for use by developers and engineering consultants designing roadway and utility projects on behalf of the City. It is referred to as the *City Design Standards* throughout these guidelines. The Consultant must refer to this document for design related criteria for drainage, power, and water utilities.

The LRT Section of Edmonton Transit has prepared a policy "Infrastructure on LRT Tunnels". This policy provides the guidelines and process for the installation of electrical infrastructure in LRT tunnels.

17.1.3 Ownership

17.1.3.1 Utility Type/Owner Agency

The following are the majority of the utility service providers within the City boundaries as of the date of the issuance of this edition of the Design Guidelines.

Storm, Sanitary and Combined Sewers	City Infrastructure Services – Drainage Branch
Bus Trolley Lines/LRT Utility Infrastructure	City Transportation Services – ETS
Traffic Signals & Street Lights	City Transportation Services – Operations Branch
Water Distribution	EPCOR Water Services Inc.
Power Distribution Overhead and Underground	EPCOR Distribution & Transmission., Fortis (outside of City boundary)
Power Transmission Overhead and Underground	EPCOR Transmission Inc., Altalink
Natural Gas Distribution and Transmission	Atco Gas
Telecommunication Lines Aerial, Underground	TELUS, BELL, MTS Allstream, Shaw, City Infrastructure Services, Others – verify through Geo Edmonton Database.
Radio Communications	Research Facility Owners
Cellular	Research Facility Owners
Broadcast Towers (Radio, Cellular, Microwave)	Confirm with ETS and City Police Services
Pipelines for Liquid and Petroleum Products	Verify through Geo Edmonton Database.

Other major utility service providers include the University of Alberta, and the Province of Alberta.

It should be noted that any one utility service provider may have more than one contact person dependent on the specific utility they are responsible for and where it is located geographically.

17.1.3.2 Transportation Electrical Services Plan (TESP)

As indicated in the section above, the Transportation Services Department owns and operates the Trolley, LRT, Signal and Street Lighting systems. The TESP is a Transportation Services Department internal quality assurance plan designed to provide a regulated framework, obligation and commitment to ensure responsible ownership.

The TESP identifies the procedures, practices and process that must be adhered to when any work (construction, alterations, repairs, relocations, maintenance) is performed in a manner that ensures an “electrically safe condition”.

As authorized by the General Manager of Transportation Services, all City staff, contractors, and developers that perform work on these *electrical distribution systems must do so in compliance with the TESP.

***Note:** Electrical Systems in LRT Stations and buildings are exempt. TESP is only required for the LRT Catenary and Signals systems, and roadway or Shared Use Paths lighting.

17.2 GENERAL DESIGN GUIDELINES

17.2.1 All Utilities

The following guidelines must be followed for all utility work:

- In general no new utilities should be located within an existing or proposed surface LRT Right of Way (ROW), except to transit across the LRT ROW as outlined below. Utilities that are required to service the proposed LRT facilities are exempt. It should be noted that under Federal legislation privately owned Telecommunications utilities may be allowed to locate within the LRT ROW parallel to the tracks. Refer to the ETS policy on Infrastructure in LRT Tunnels.
- Existing, relocated or proposed utilities that run longitudinally adjacent the LRT ROW should be located an absolute minimum of 4000 mm from the centerline of the closest track or it will be considered to be "Impacted by LRT Construction" as described below (refer to Figures 3.18 and 3.22).
- Where possible, utilities should cross beneath the LRT ROW at a 90 degree angle to the LRT track centerline. The depth of cover must be a minimum of 1830 mm from TOR to the top of all utility encasements (refer to Figures 3.18 and 3.22).
- A Design Guideline variance application must be submitted to LRT D&C and ETS where these design minimums are not met. LRT D&C and ETS have the ability to accept, reject, or negotiate an alteration to a variance application.
- In general ETS prefers that *utilities within the "Impacted by LRT" zone (crossing or parallel to the trackway) be sleeved or cased. Concrete casing is preferred, but suitable alternatives may be evaluated by the Consultant as acceptable. If another protective option is recommended it must have the approval of ETS prior to final design.

***Note:** Natural gas lines are to be reviewed on an individual basis with the service provider.

- All abandoned utilities beneath the trackway should be removed. If they cannot be removed they must be abandoned appropriately for the type of utility such that the safety or stability of the LRT line is not compromised.
- Future utility crossings could be bored. However, due to limited ROW availability it is recommended that consideration be given to the provision of ducts for future utility installations if the future utility crossing location has been fixed.
- Where possible, utilities should be constructed with non-conductive materials (refer to Chapter 13, Corrosion and Stray Current Control).
- Pipelines carrying water, oil, gas, highly flammable, volatile, or other pressurized substances are to be suitably cased, or bridged over with a structural concrete slab. If they are encased, the casing material must also be designed to withstand LRT loadings and should employ appropriate cathodic and corrosion protection devices.

17.2.2 Utilities Impacted by LRT Construction

The following guidelines must be followed for all utility work:

- Utilities encountered or located close enough to be deemed to be affected by LRT construction must be;
  - Maintained in place and in operation during construction, if they do not present an impediment to LRT construction as scheduled,
  - Temporarily relocated and maintained in operation during construction,
  - Temporarily relocated and maintained, then, upon the completion of LRT construction, replaced by a new utility installation, or
  - Permanently relocated to a new location in accordance with LRT utility separation requirements.

- Any utility servicing private property within the zone of influence should not be interrupted. If temporary service has to be provided it should be installed so as to be permanent at the completion of LRT construction.
- New installation of any existing utilities should be designed to provide service equal to that offered by the existing installation.
- No betterment of the service is to be provided unless specifically directed by LRT D&C.
- Where the LRT tracks cross power transmission lines, railway, gas, oil, or other high-pressure pipelines, a crossing agreement must be obtained. Further detail on this requirement is provided in Volume 1 of the *City Design Standards*. Refer to Section 17.3.2.1.

17.3 RESPONSIBILITIES AND COORDINATION REQUIREMENTS

17.3.1 Process Overview

On behalf of ETS, all utilities affected by LRT construction or that are required to service LRT facilities, will be coordinated by the LRT Project Office through the Utility Design Consultant and the respective utility service provider.

The utility documentation, coordination and design review process will generally be as follows:

- Notification to Utility Companies of the proposed LRT Right of Way.
- The identification and documentation of all abandoned, existing, and proposed utilities within the immediate vicinity of the LRT corridor as per Section 17.3.2.1. Identification of proposed utilities within the corridor and within the sphere of influence of the corridor is also required.
- The LRT Utility Design Consultant in consultation with the applicable utility must identify those utilities that may be impacted by LRT construction and prepare proposals for their relocation in accordance with these design guidelines for submission to the utility owner.
- Video inspection to determine the condition of active storm and sanitary lines affected by LRT development should be considered.
- The utility service provider will review the Utility Design Consultant's utility record plan and relocation proposal and will provide comments, suggestions, or present alternatives back to the Utility Design Consultant.
- The Utility Design Consultant must review all utility service provider's comments. A composite utility plan will be developed showing the proposed utility relocation alignments and orientations. This plan is to be reviewed again with each utility service provider.
- Each utility service provider will review and respond to the Utility Design Consultant with either acceptance of the proposed alignments and orientations or a submittal of a request for further alterations. Upon acceptance the utility service provider will sign-off the plan.
- The signed off plan will be submitted by the Utility Design Consultant to the City ROW Management Office who will in turn issue a ULA number in accordance with ULA requirements.
- The Utility Design Consultant will issue a final composite utility plan showing the proposed locations and orientations of all relocated and new utilities.

17.3.2 LRT Utility Design Consultant

17.3.2.1 Preliminary Engineering Phase

The following tasks are to be undertaken by the Utility Design Consultant during the preliminary engineering phase of the LRT design work:

- All utility service providers are to be notified of the proposed LRT ROW route and are to be coordinated with to supply and receive the following;
    - Data and documentation (including plans and profiles – where available) of existing active and abandoned utilities that may affect or be affected by LRT construction.

- Data and documentation of proposed utilities within the corridor and within the sphere of influence of the corridor that may be affected by LRT construction.
- Determination of the responsibility for relocation costs and notice timeline requirements (as per existing agreements with the City).

- Major property owners adjacent to the LRT construction may have to be contacted to obtain available utility service documentation that is unavailable from the utility service owner.
- Utilities that are within the Impacted by LRT Construction zone that will require relocation are to be identified as soon as possible during this phase of the work. The removal process to be employed in the abandoned facility should also be determined at this phase of work.
- Verification by field survey of critical elevations and locations of existing utilities must be completed.
- Right-of-way or easements required to relocate or install new utilities to service proposed LRT facilities must be identified.
- Preliminary cost estimates for relocated utilities and LRT facility services must be prepared.

The City has developed procedures that are to be followed for the protection of utilities and the crossing of high-pressure pipelines. Where applicable, the Consultant must take these procedures into consideration during the utility design process. These procedures can be found in Volume 1 of the *City Design Standards* as follows:

Procedures for Crossing High Pressure Pipelines – Section 01561
Procedures for Protection Existing Utilities and Structures – Section 01562

17.3.2.2 Final Design Phase

The Utility Design Consultant must clearly and correctly identify the following information on the final design drawings for:

<u>Relocation of Existing Utilities</u>

- Utilities retained in place and in service during and following LRT construction.
- Utilities that will be restored upon completion of LRT construction.
- Utilities permanently relocated beyond the immediate limits of LRT construction.
- Utilities that have been abandoned in place, or are to be abandoned and removed.
- Final plan and profiles including any special protection measures required.
- All right-of-ways, existing and proposed, and all easements, existing and proposed.
- Construction Cost estimates and Schedule

<u>Utilities Required to Service the LRT Facility</u>

- Final plans and profiles of proposed utility including any special protective measures required.
- Construction Cost estimates and Schedule

The Utility Design Consultant must refer to the appropriate sections of the *City's Design Standards* for design related criteria for drainage, water, street-lighting (includes drawings), and power (includes drawings), facilities and appurtenances.

There may be instances whereby the utility service provider will assume the responsibility for final design. This should be verified at the time the utility service provider is initially contacted.

17.4 NOTICE REQUIREMENTS

The timeline requirements for providing notice to affected utility service providers of the intent to carry out utility related construction activities is outlined in each agreement with the City. The notice period must be followed so the utility service provider can not only budget for the work but also schedule the work in accordance with the LRT construction schedule.

17.5 LRT UTILITIES

17.5.1 General

As stated previously, all utilities specifically designed for the LRT must conform to the applicable codes, standards regulations, and requirements of the utility service provider and the City of Edmonton, as the authority having jurisdiction.

The design of the utility will be done by the Consultant that is designing the new LRT facility/component requiring the utility service.

The chapters listed below present the design guidelines for the major utility infrastructure and services that are required to provide a functional LRT extension.

- LRV's – refer to Chapter 6 Traction Power
- Signals – refer to Chapter 7 Signals
- Communication systems and devices – refer to Chapter 8 Communications & Control
- Facility internal and external lighting – refer to Chapter 11 Electrical Systems
- Facility (*other) and ROW – refer to Chapter 11 Electrical Systems

***Note:** pumps, fans, service power, etc.

- Facility and ROW Storm drainage and Sanitary Sewers – refer to Chapter 12 Mechanical Systems
- Facility Gas and Water Service – refer to Chapter 12 Mechanical Systems

17.5.2 Utility Service Connection

The Facility Design Consultant must contact the utility service provider to determine:

- The number of LRT project site plans that need to be submitted.
- The location that the utility service will enter the project site.
- The number of ducts that are required to service the project (if applicable)

The Contractor constructing the facility is responsible for making application and paying for the applicable utility service and any associated apparatus.

17.5.3 Utility Placement At-Grade Trackway

Clearance requirements and the typical placement of major LRT utility elements for surface and open portal sections are illustrated on Figures 3.18A, 3.18B, 3.22 and 3.23.

17.5.4 Utility Placement in Underground Tunnels or Structures

Clearance requirements and the typical location of LRT utilities to be placed in tunnels or underground grade separation structures are illustrated on Figures 3.10, 3.11, 3.16, 3.17, 3.19, and 3.20. Also refer to ETS policy on Infrastructure in LRT Tunnels.

Exposed natural gas lines servicing LRT stations must only enter the station from an end wall. This requirement is to reduce the risk of the gas line being contacted by operations and maintenance personnel that are primarily working on the track sides of the station.

LRT DESIGN GUIDELINES

Chapter 18

2017 EDITION – Revisions Tracking Form

Section	Reference	Revision General Description	Issue Date
		NO UPDATES FROM 2011 EDITION	July 2017

18.0 STREETS DESIGN

		Page
18.0	**STREETS DESIGN**	**1**
18.1	GENERAL	1
18.1.1	Introduction	1
18.1.2	Abbreviations	1
18.1.3	Applicable Standards, Regulations, Practices, Guidelines	1
18.1.4	Plan Approval Procedure	2
18.2	STREET GEOMETRIC DESIGN	3
18.2.1	Medians	3
18.2.2	Private Crossings/Curb Cuts	3
18.2.3	On-Street Parking	3
18.2.4	Bus Loading Zones	3
18.2.5	Sidewalks/Walkways/Shared Use Paths /Boulevards	3
18.2.6	Curb Ramps	4
18.2.7	Landscaping	4
18.2.8	Street Lighting	4
18.2.9	Temporary/Detour Roads	4
18.2.10	Clearance Requirements (edge of road to LRT)	4
18.3	STREET CONSTRUCTION	4
18.3.1	General	4
18.3.2	Grade Crossings of the LRT Trackway	4
18.4	TRAFFIC CONTROL MEASURES	4
18.4.1	General	4
18.4.2	Crosswalks	4
18.4.3	Vehicular Access and Parking	5
18.5	LRT GRADE CROSSING SAFETY	5
18.5.1	General	5
18.5.2	Mitigation Measures	5
18.5.3	Evaluation Procedure	6
18.5.4	Road Crossings of Arterial Roadways	7
18.5.5	Protective Measures for At-Grade Pedestrian Crossings of Arterial Roads	7
18.6	STREETS DRAINAGE	8
18.7	STATION ACCESS	8
18.7.1	Access Modes	8
18.7.2	Vehicular Access	8
18.7.3	Surface Park and Ride Lots	9
18.8	EMERGENCY AND MAINTENANCE VEHICLE ACCESS	11
18.9	TRANSIT CENTRES	11
18.10	FENCING	12

List of figures

Figure 18.1 - Pedestrian Controls Decision Tree
Figure 18.2 - Four Lane Cross-section All Pedestrian Crossings
Figure 18.3 - Four Lane Cross-section Pedestrian Crossing One Side Only
Figure 18.4 - Four Lane Cross-section No Pedestrian Crossings
Figure 18.5 - Section Widened for LRT Station Pedestrian Crossings One Side Only
Figure 18.6 - Section Widened for LRT Station No Pedestrian Crossings

18.0 STREETS DESIGN

18.1 GENERAL

18.1.1 Introduction

This chapter presents the guidelines that are needed by the roadway design consultants to carry out the preliminary and final design of changes to existing roadways and related facilities that may be impacted by the construction of LRT facilities. Included are recommended guidelines for grade crossings. In addition, the guidelines are also applicable to new roadway construction, including surface parking facilities that are to be constructed as part of the LRT project.

The geometric and pavement design of all public streets and roadways must be approved by the City Transportation Services Department (refer to Section 18.1.4).

18.1.2 Abbreviations

AASHTO	-	American Association of State Highway and Transportation Officials
FHA	-	Federal Highway Administration
MUTCD	-	Manual on Uniform Traffic Control Devices
OSCAM	-	On-Street Construction and Maintenance
TAC	-	Transportation Association of Canada
TCRP	-	Transit Cooperative Research Program

18.1.3 Applicable Standards, Regulations, Practices, Guidelines

18.1.3.1 Standards and Practices

The Consultant's primary source for streets design criteria will be the latest edition of the City of Edmonton Design and Construction Standards referred to in these Guidelines as the *"City Design Standards"*. It has been developed from a number of design standards documents currently in industry use (see below) and the City's background and experience in streets and roadway development. Its purpose is to ensure that municipal improvements and related systems in the City of Edmonton are designed consistently by consultants and the development industry.

Unless stated otherwise, all design work must conform to or exceed the requirements of the latest editions of all applicable codes, standards and regulations.

A Policy on Geometric Design of Highways and Streets (ASSHTO)
Barrier-Free Design Guidelines – Alberta Safety Codes Council
City of Edmonton Design and Construction Standards *(City Design Standards)*
City Policy C452 Street Maintenance and Construction Coordination for Traffic Flow
Design Vehicle Dimensions for Use in Geometric Design (TAC)
Edmonton Traffic Bylaw 5590
Edmonton Zoning Bylaw 12600
Edmonton Light Rail Transit Graphic Standards Manual
Geometric Design Guide for Canadian Roads (TAC)
Metric Curve Tables (TAC)
Manual Uniform Traffic Control Devices (FHA)
Procedures Manual for On-Street Construction Safety –Transportation Services Department, Traffic Operations
Road and Walkway Lighting Manual – Transportation Services Department Traffic Operations

Traffic Signals Construction and Maintenance Specification –Transportation Services Department, Traffic Operations
Urban Supplement to the Geometric Design Guide for Canadian Roads (TAC)

Replacement of roads, sidewalks, landscaping or other related infrastructure located on privately owned property, which is affected by LRT construction, must be designed and constructed in kind, unless otherwise directed by the City acting on behalf of the property owner.

18.3.1.2 Other Design References

TCRP Project 13 Light Rail Service Pedestrian and Vehicle Safety
H.W. Korve, J.T. Siques
ETS Transit Centre Design Guidelines – February 2011
Edmonton SLRT Extension Traffic Control and Circulation Study
Korve Engineering, April 2004
Edmonton SLRT Extension Traffic Control and Circulation Study- Segments 2 & 3
Korve Engineering, July 2007

18.1.4 Plan Approval Procedure

All new additions or modifications to municipal roadways and drainage facilities must be approved by the City using the *Municipal Improvement Agreement" procedure.

***Note:** Although this is not a mandatory requirement for LRT extensions, the City has determined that the procedure must be utilized by all LRT Consultants preparing road and drainage designs.

This procedure requires that the following information be provided on the drawings:

- Notes to indicate tie-ins to existing pavement, curbs, etc. will be to the satisfaction of the City of Edmonton.
- Existing elevations on pavement indicating the direction of surface drainage.
- Curb returns, cross-fall, and roadway longitudinal slopes including crossings to abutting property.
- Cross-sectional details showing landscaped areas, roadway cross-fall, light pole locations, road/walk structure and limits of construction.
- Show references to *City Design Standards* drawing numbers on all drawings and cross-sectional details.
- Provision for the approval signature by the Transportation Services Department, Director of Roadway Design.

Pavement marking and signage plans are also to be prepared and approved by the Supervisor Pavement Markings/Detours Traffic Engineering Section of the Traffic Operations Branch. These elements are generally supplied and installed by the City. Other Traffic Operations signatures that may be required are: Director of Traffic Engineering; Director of Signals and Street Lighting.

Other signatures that are required on applicable plans for Drainage; Infrastructure Services Department and for Landscaping; Infrastructure Services Department

18.2 STREET GEOMETRIC DESIGN

A table summarizing the geometric design standards in accordance with the roadway classification is presented in Volume 2, Section 10 of the *City Design Standards*. Drawings of each classification have also been developed. Related drawings for each class can also be found in that chapter.

In general, final design should be based upon the roadway geometry developed during the preliminary engineering phase.

18.2.1 Medians

For details refer to drawings 5060, 5062, 5064 contained in Volume 2 of the *City Design Standards*. Other drawings in this chapter may also show median details.

18.2.2 Private Crossings/Curb Cuts

In general, all existing crossings affected by LRT construction must be replaced in kind, where practical. The closure of crossings required to facilitate LRT operations or construction must be approved by Transportation Services Department, Transportation Planning and Traffic Operations Branches.

Drawings 5040 to 5050 inclusive contained in Volume 2 of the *City Design Standards* provide the Consultant with the details of various crossing configurations.

18.2.3 On-Street Parking

Wherever practicable, all on-street parking stalls that are affected by LRT construction should be replaced in kind.

18.2.4 Bus Loading Zones

Bus loading zones on existing or new streets designated as bus routes are either parallel or recessed in relation to the curb. Locations, dimensions, and arrangements for the relocation of, or new zones will be determined by ETS. Loading zones are constructed in concrete.

Bus loading zones should be located adjacent to and in close proximity to LRT stations where the LRT corridor parallels a roadway that is designated as a bus route. Further related details are provided in Volume 2, Section 7 of the *City Design Standards*.

18.2.5 Sidewalks/Walkways/Shared Use Paths /Boulevards

Existing sidewalks affected by LRT construction must be replaced in kind where practical. Sidewalks must be provided for pedestrian access to LRT stations.

Shared use paths accommodating pedestrians and cyclists may be developed within the LRT ROW. This will be determined during the LRT extension planning phase. Typically the following widths should be provided:

- Minimum width = 3 m + 0.6 m offsets from both edges (clearance to vertical barrier)
- Preferred width = 4 m + 0.6 m offsets from both edges (provide when high bike/ped volumes are forecast).

Pedestrian/cyclist crossing of the LRT tracks immediately adjacent to Type III stations or at other locations along the LRT alignment must be reviewed on an individual basis with ETS (refer to Section 18.5).

Refer to Volume 2 Roadways, Section 3 of the *City Design Standards* for details and drawings.

18.2.6 Curb Ramps

Curb or wheelchair ramps must be provided as follows:

- Restore or replace any ramps that are affected by LRT construction.
- At roadway intersections adjacent to LRT stations, provide ramps at all four corners as well as at the access points to the platform.

For details refer to drawings 5052, 5054, and 5056 contained in Volume 2 of the *City Design Standards*.

18.2.7 Landscaping

LRT corridor and station landscaping guidelines are presented in Chapter 14, Section 14.5 of these guidelines. For streets landscaping design criteria, refer to Volume 5 of the *City Design Standards*.

18.2.8 Street Lighting

Refer to Volume 6 of the *City Design Standards* for street lighting design standards.

18.2.9 Temporary/Detour Roads

In general, temporary or detour roads should comply with the provisions of Volume 2, Section 6 of the *City Design Standards*.

18.2.10 Clearance Requirements (edge of road to LRT)

The minimum distance from the centerline of the closest track to the curb of the roadway is 4100 mm for tie and ballast. For embedded track the distance is 2600 mm. (refer to Chapter 3 Figures 3.8A and 3.8B of these guidelines).

18.3 STREET CONSTRUCTION

18.3.1 General

For detailed criteria, refer to Volume 2 the *City Design Standards*, and the relevant specifications and drawings.

18.3.2 Grade Crossings of the LRT Trackway

For current roadway and pedestrian grade crossing cross-sectional details refer to Chapter 5, Trackwork Section 5.5, and Figures 5.21 and 5.22A to 5.22D of these guidelines.

18.4 TRAFFIC CONTROL MEASURES

18.4.1 General

Through Traffic Bylaw 5590 and City Council Policy C452, the Transportation Services Department's Manager of Traffic Operations has been granted the authority to control all work occurring on the road ROW.

In addition, the Traffic Operations Branch is responsible for developing and or approving any changes to traffic signals, pavement markings, and signage installations. The design of traffic operational measures is to be done in accordance with the Traffic Signals Construction and Maintenance Specification.

18.4.2 Crosswalks

Crosswalks should be provided at all intersections adjacent to LRT stations. In some instances mid-block crossings may be warranted.

18.4.3 Vehicular Access and Parking

Any construction activity that will take place on street right-of-way must comply with the requirements of the City of Edmonton Procedures Manual for On-Street Construction Safety. It is mandatory that an OSCAM permit be obtained prior to any work being started.

Refer to Volume 1, Section 01550 of the *City Design Standards* for additional details and requirements.

18.5 LRT GRADE CROSSING SAFETY

18.5.1 General

The introduction of LRT systems into the urban environment introduces elements that differ from typical traffic control measures for streets and operating railways.

These elements include:

- LRT trains crossing roadways/sidewalks are much more frequent than an operating railway. The Edmonton LRT System operates on a 5 minute headway in each direction during its peak periods.
- LRV's tend to be quieter than operating railways or adjacent vehicular roadway traffic.
- A large number of patrons embark and disembark from a passenger station on a daily basis.
- Pedestrian at-grade crossings of LRT tracks in particular, have proven to be a safety concern for the majority of LRT operating systems. Pedestrian, and vehicular incidents, can be serious.

ETS is committed to ensuring that the LRT system attains an optimum level of safety by taking all the appropriate due diligence steps through planning and design to ensure that pedestrian and vehicular safety is ensured.

In addition, the dissemination of information by the transit operating agency to the public about the hazards and cautions that are required when mixing LRT with pedestrians and vehicles in an urban environment is also an important element in the due diligence process.

Through the planning process associated with any LRT extension, the objective is to minimize the number of at-grade crossings to the extent feasible, considering alignment objectives and community and environmental impacts.

The provision of grade-separated crossings is subject to the number of projected pedestrian/vehicular volumes. The feasibility and associated impacts of providing a grade-separated crossing must be part of the analysis.

Once it has been determined that an at-grade crossing is required, the challenge during the planning and design process should be to eliminate identified hazards and unacceptable safety risks associated with each individual crossing.

If the hazard or degree of risk cannot be adequately reduced both active and passive warning devices must be considered to provide the appropriate level of protection that is required. A Specialist Consultant is generally retained to provide analysis and recommendations in this regard.

18.5.2 Mitigation Measures

There are a wide range of methods that can be considered to mitigate the potential danger as follows:

- Signage on the sidewalk and at eye level to guide pedestrian behavior.
- Signage – "Look both ways", "Watch for second train" signs.

- Pedestrian crossing gates should be designed to discourage persons from jumping over or crawling under.
- Pedestrian swing gates and crossing gates design should raise “awareness of danger” and/or “awareness of a safe area” near trains.
- Provision of a clearing (refuge) zone between the gates and the track with clear visibility by the Train Operator.
- Ensure that the crossing controls allow enough time to complete crossings safely with special attention to the predominant user in the area.
- Pedestrian mirrors or stainless steel type sign outside to assist with line of sight.
- Directional audible warning devices with messages that trains are approaching (both directions).
- Consideration for specific needs relevant to location of school or special needs crossings.
- Ramping should avoid rounded edges; squared corners are preferred as they provide direction for visually impaired.
- Width considerations to accommodate motorized wheelchairs/scooters.
- Standardized location of activated crossing signals in proximity to the crossing location.

18.5.3 Evaluation Procedure

In summary, a review of each at-grade crossing must be undertaken that considers the following factors:

- The LRT operating environment, design and anticipated operating speed.
- LRT alignment geometry.
- Degree of sight restriction.
- Volume and frequency of vehicular and pedestrian activity. Potential for pedestrian inattention or hurried behavior.
- School Zones.
- Identify the safety hazards/risks associated with each crossing. Eliminate if feasible. Mitigate or warn.
- Perform a safety analysis of the crossing.
- Apply passive/active treatments if deemed to be required (refer to previous section)

TCRP Report 69 presents a pedestrian controls decision tree (refer to Figure 18.1) that can be used as a tool by the Consultant for evaluating the type of treatment that should be installed at a pedestrian grade crossing based on site-specific conditions. The decision tree defines the type of pedestrian devices and controls that are desirable based on six criteria (decision points) relative to the pedestrian crossing environment.

The six key decision points are:

Decision Point 1	-	Pedestrian facilities and/or minimum pedestrian activity is present or anticipated
Decision Point 2	-	LRT speeds exceed 55 km/hr
Decision Point 3	-	Sight distance is restricted on approach
Decision Point 4	-	Crossing is located in a school zone
Decision Point 5	-	High levels of pedestrian activity occur
Decision Point 6	-	Pedestrian Surge occurs or high pedestrian inattention

The Consultant should refer to the *Korve Design Reference* for additional information regarding the decision tree analysis process.

18.5.4 Road Crossings of Arterial Roadways

LRT operating in the median of the roadway is preferred over running along side of the roadway for the following reasons:

- Trains travel in the same directions as the roadway traffic on either side of the centerline. The driver expectation is that there are no oncoming trains to the right of the driver.
- Conflicts with driveways and property access points are minimized.
- Queuing conflicts are minimized. Drivers generally do not queue up through the centre of a intersection, whereas with side running, queuing across the tracks is commonplace.
- Median alignments do not interfere with the drainage of the roadway lanes which can occur along the curb regardless to the presence of the LRT trackway.
- Allows right-hand turn movements on both sides of the intersection.

The biggest concern with median operation is the control of left turn movements made by the mainline road vehicle traffic into the crossing roadway. It is imperative that positive control measures for the left-turns be provided such as:

- Left turn signals
- Signals should be a lagging phase activated after the mainline traffic has been served
- Left turn movements are allowed to overlap

Automatic crossing gates are generally required once the speed of the LRT trains exceeds 56 kph through an intersection when the traffic control is provided solely by a signal.

There are a number of options for the placement of the gates. For roadways with wide medians it is not possible to completely barricade off access across the trackway.

- Crossing gates are placed parallel to the trackway
- Left turn gates are placed perpendicular to the trackway along with the provision of supplemental cross-street gates
- Left turn gates are placed at 30 degrees to the trackway along with the provision of supplemental cross-street gates.

For the 111 Street section of the South LRT Extension to Century Park crossing gates parallel to the trackway was selected as the preferred option for the following reasons:

- The visibility of the crossing gates and supplemental flashing light devices are maximized.
- The likelihood of broken gate arms is reduced compared with the other options.
- Additional protection can be provided by the use of supplemental crossing gates on the outside of the intersection if the cross street is wide.

The following figures are included in this chapter. They show a number of gated road crossing configurations with and without the provision for the pedestrian's crossings.

Figure 18.2 – 4 Lane Cross-section all pedestrian crossings.
Figure 18.3 - 4 Lane Cross-section pedestrian crossings one side only.
Figure 18.4 - 4 Lane Cross-section no pedestrian crossings.
Figure 18.5 – Section (median) widened for LRT Station Pedestrian crossings one side only.
Figure 18.6 – Section (median) widened for LRT Station No Pedestrian crossings.

18.5.5 Protective Measures for At-Grade Pedestrian Crossings of Arterial Roads

Where pedestrian crossings are included as part of the roadway intersection design, the following treatments are to be provided:

- Barrier channelization/swing gates– force the pedestrian to use the designated pedestrian crossing location. Include *detectable warning strips where practicable.

- Active Warning Devices – Use both visual and audio devices in conjunction with the swing gates.
- A pedestrian service phase long enough to allow pedestrians to cross both sides of the roadway including the median, if feasible.
- Countdown timers on pedestrian signal heads.
- Pedestrian refuge trapezoidal area – minimum of 1.5 m to 2.5 m by 3.0 m wide between swing gates and the edge of the roadway at the median.
- Locate the cross-walks as close to the intersection as possible; avoid skew angle crosswalks, where possible and avoid changes in crosswalk orientation with intersections.
- Use "Signals Stop Line" signs to designate stop bar locations.
- For open crossings or controlled by a crossing arm provide a *detectable warning strip coloured yellow with STOP written on the approach side.
- For crossings with pull (swing) gates provide a *detectable warning strip coloured yellow.

***Note:** Refer to Chapter 5 Trackwork, Section 5.5.2 and Figures 5.22A TO 5.22D incl. for further details regarding the layout and construction of the warning strips.

18.6 STREETS DRAINAGE

Volume 3 of the *City Design Standards* provides the streets design consultant with all of the City standards related to the drainage requirements for roadways. In addition, specification clauses are provided for a variety of drainage related appurtenances such as catch basins, manholes, culverts, etc.

18.7 STATION ACCESS

18.7.1 Access Modes

LRT patrons will arrive or depart a typical LRT station by the following modes of travel:

- Walking
- Automobile passenger with a disability
- DATS
- Bus
- Automobile driver with a disability (at an adjacent park-and-ride *facility)
- Bicycle
- Automobile passenger drop-off/pickup
- Taxi
- Automobile driver/passengers (at an adjacent park-and-ride *facility).

***Note:** Facility includes surface parking lots and parking structures.

For the Edmonton LRT system, the above modes are listed in order of priority for providing convenience and directness of routing.

The layout of a station site, as well as the associated access roadways, must ensure that the provision is made for access by patrons in all the above access modes where applicable.

Station Interchange and Accessibility principles are presented in Chapter 10, Stations and Ancillary Facilities, Sections 10.2.2 and 10.2.3.

18.7.2 Vehicular Access

Provision must be made in the design of the station access for the following vehicle access modes. They can be as simple as one mode only, or combined subject to the scope of the design.

- Entrance Roadways
- Private Vehicle Passenger Drop-off

- Taxi
- Bus / DATS Drop-off on street adjacent to the station
- Park and Ride facility
- Bus Drop-off from a Transit Centre located adjacent to a station
- Transit Centre combined with a Park and Ride facility

Parking for City service vehicles must be provided (refer to Section 18.7.3.5 and Chapter 10, Section 10.4.4). Manoeuvrability of emergency vehicles may also be a design consideration.

18.7.2.1 Entrance Roadways

The design of roadway entrances to station sites that interface with bus transit centres, park-and-ride facilities and vehicular drop-off areas must take into consideration adjacent land uses. Where possible, avoid large unplanted or paved areas that are out of scale with those uses. In addition, the design should take into consideration the following requirements:

- Avoid direct access from a major roadway. A secondary road from the main road to access the forgoing facilities, should be provided.
- Direct access from residential streets should be avoided, where possible.
- The entrance roadway should be designed to provide sufficient storage to meet the expected peak period transit ridership and avoid having vehicular traffic backing up onto the public street.
- Avoid conflicts between the entrance road, pedestrian and bicycle flow corridors and access points.
- Strive to provide more than one entrance roadway to large parking areas (more than 1000 stalls).

Entrance roadway design must be in accordance with the *City Design Standards*.

18.7.3 Surface Park and Ride Lots

18.7.3.1 General

Surface Park and Ride lots may be provided at selected LRT stations as determined through the planning process. The configuration and quantity of spaces to be provided will be determined by the projected demand and site restrictions. The park and ride area must be designed to optimize the available site area.

Special circumstances such as site constraints, joint-use partnerships, etc. may determine that a parking structure be constructed. Chapter 19, Parkades, provides the design guidelines for parking structures.

Designated parking stalls for the self-driving disabled LRT patron must be provided as per the self-drive accessible requirements below.

Designated short-term parking and taxi stalls must be provided adjacent to the area.

Circulation roadways, drop-off and parking areas must be hard-surfaced in accordance with the provisions of the Edmonton Zoning Bylaw 12800, Section 54.6.

Typically fencing must be provided around the perimeter of surface Park and Ride Lots. The Consultant will review this requirement with ETS early in the parking lot design phase.

18.7.3.2 Parking Lot Circulation

The design of the parking area traffic circulation system should strive to minimize:

- Vehicular travel distances
- Conflicting movements
- Number of turns

The vehicular movements within the parking area can be dispersed by the strategic placement of entrances, exits and aisles.

If the normal aisle standards provide inadequate vehicle circulation, additional two-way or one-way circulation roadways should be provided. Minimum widths are:

- Two-way circulation road – 7.3 m
- One-way circulation road – 5.5 m

18.7.3.3 Aisles and Parking Stalls

Aisles should be aligned to facilitate convenient pedestrian movement toward the station.

- Strive to keep the aisle length less than 122 m.
- Aisle width – 7 m minimum.
- Stalls dimensions are: 2.6 m wide by 5.5 m in length minimum for 90 degree angle parking. If they are adjacent to landscaped areas, with no obstructions, consideration can be given to reducing the width by 0.6 m.
- At the head of the parking stall, the horizontal clearance required must be 0.75 m from the front face of the curb to any obstruction.
- At the sides of stalls, if adjacent to wall or raised planters, provide an additional 0.3 m minimum clearance.
- Dead-end aisles must be avoided.

Light Standards or landscaping should be considered in areas where a parking stall cannot be placed.

18.7.3.4 Self-Drive Accessible Parking Stalls

As per Chapter 10, Stations and Ancillary Facilities, Section 10.2.2, a minimum of one stall for every 100 stalls must be allocated to self-drive persons with disabilities.

Accessible parking stalls must be provided near station entrances in conformance with Alberta Barrier-Free Design Guide and meet the following requirements:

- A mobility-impaired patron should not be required to cross any roads en route to the station entrance.
- Mobility impaired patrons should not be forced to travel behind parked vehicles.
- Travel paths should be free of gratings that would constitute a hazard to a person on crutches or with a cane.
- The stall must be identified with appropriate signage that restricts the use of the space to disabled persons.
- Ramps must be provided in curbs that will be traversed by persons in wheelchairs.
- Except for ramps in curbs, travel paths should preferably contain no longitudinal grades steeper than 5% and no cross-slopes steeper than 3%.
- Sizing of parallel stalls should be 7 m x 3.7 m.

18.7.3.5 Service Vehicle Parking

A minimum of two (2) parking stalls must be provided for service vehicles. Refer to Chapter 10, Stations and Ancillary Facilities, Section 10.4.1.11.

18.7.3.6 Signage

Parking lot signage must conform to the requirements of the Light Rail Transit Graphic Standards Manual.

18.7.3.7 Curbs and Medians

Curbs must be provided around the entire perimeter of the parking area, circulation roadways, at raised concrete medians and other locations as deemed necessary by ETS. Curb design must be in accordance with the *City Design Standard.*

18.7.3.8 Drainage and Grading

Drainage analysis and design must be done in accordance with the *City Design Standards* and the process identified in Chapter 12, Mechanical Systems Section 12.7

- Pavement cross slope should not be less than 1% or greater than 6% (5% for accessible routes).
- A minimum slope of 0.5% must be provided in concrete gutters.
- The preferred maximum slope from the head of the stall to the rear is 2%.
- Drainage must be directed away from pedestrian corridors.
- Wherever possible, catch basins should not be located in aisles.
- The depth of ponding over catch basin inlets must not exceed 350 mm.

18.7.3.9 Pavement Design

The pavement design for the parking and drop-off areas, circulation, and access roads and walkways, must be done in accordance with the requirements of the *City Design Standards*.

18.7.3.10 Lighting

Where applicable, the lighting principles stated in Chapter 10, Section 10.2.7 should be followed. Lighting levels to be provided are contained in Chapter 11, Electrical Systems, Section 11.10.4. Applicable lighting criteria, standards and requirements provided in the Transportation Services Department's Road and Walkway Lighting Manual must also be utilized.

Placement of the lighting poles (in addition to providing the required illumination levels) should be coordinated with the landscaping plan. They may be placed in areas that are not used for parking, such as: the end of rows, adjacent to walkways at the corners of the parking, and medians, etc.

18.7.3.11 Planted Areas

The total area required for landscaping must meet the requirements of the City Zoning Bylaw 12800. The landscaping design should be done in accordance with the principles stated in Chapter 10 Stations and Ancillary Facilities, Section 10.2.9 and the guidelines contained in Chapter 14, Impact Mitigation, Aesthetics, ROW Control, Section 14.3.

18.8 EMERGENCY AND MAINTENANCE VEHICLE ACCESS

There must be provision to allow maintenance and Emergency vehicle access points along the LRT ROW. For each section of at-grade ROW in between stations, there must be at least one vehicle access point. Signage and other measures must be provided in the vicinity of the vehicle accesses to:

- Discourage trespassing
- Indicate the prohibition of any obstructions such as parking the of private vehicles

18.9 TRANSIT CENTRES

The station designer must refer to and follow the *ETS Transit Centre Design Guidelines* if a proposed Transit Centre adjacent to an LRT station is to be designed and constructed as part of the LRT Station contract package.

18.10 FENCING

Fencing is required around surface parking lots for security and to provide safe passage for pedestrians. It must be designed and installed in accordance with the guidelines presented in Chapter 14, Section 14.4.1 and the standards given in the *City Design Standards*.

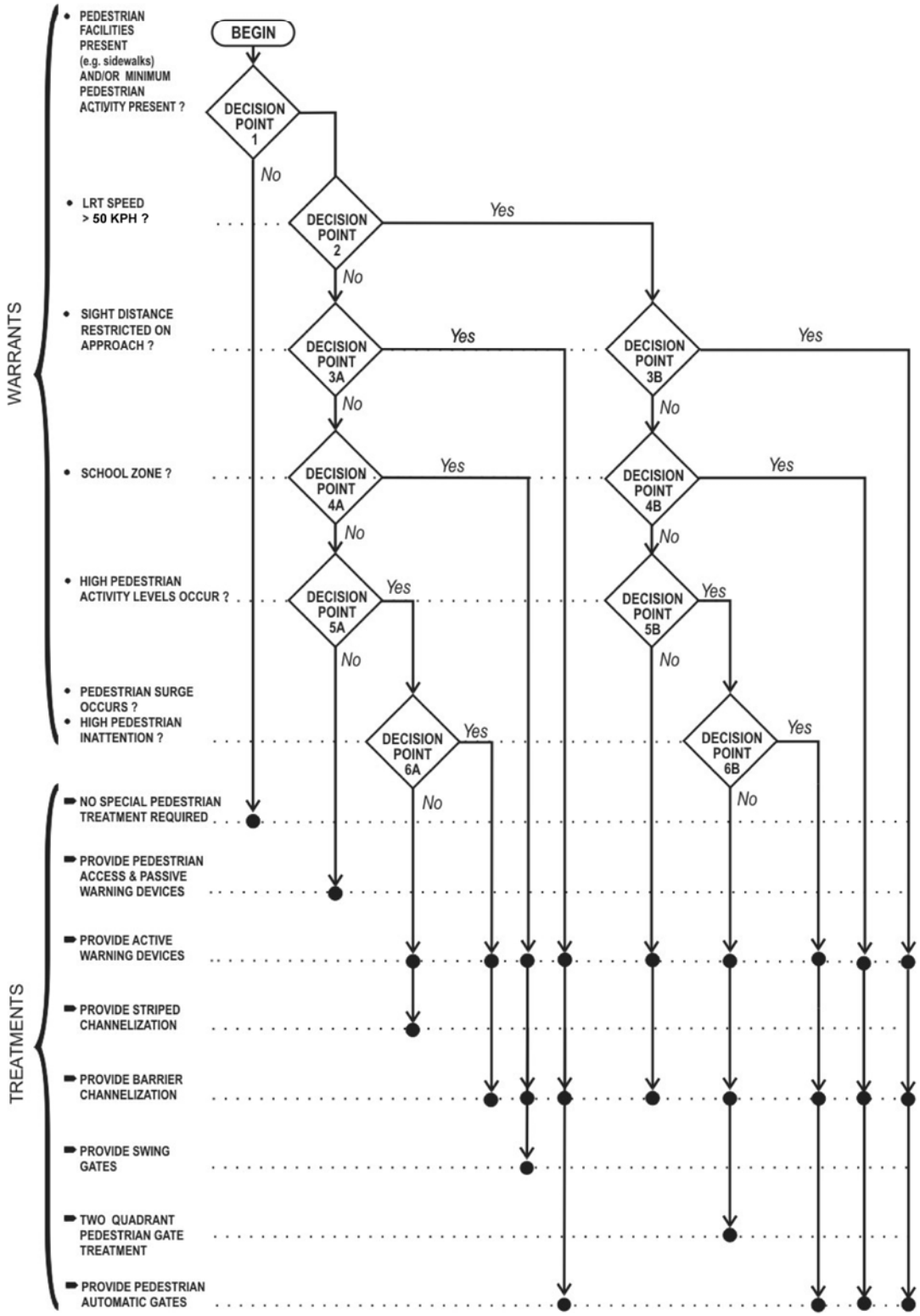

		FIGURE 18.1 PEDESTRIAN CONTROLS DECISION TREE	CHAPTER 18 STREET DESIGN
Date	Revision		

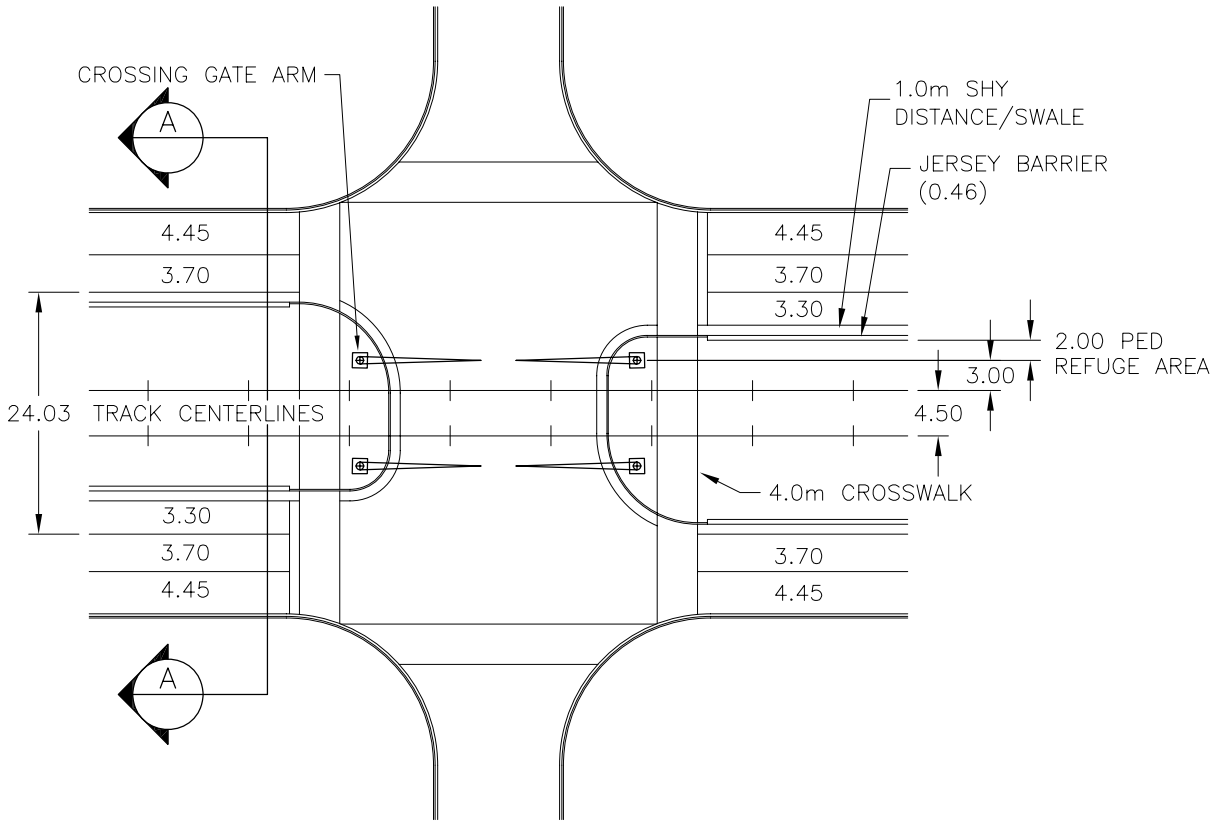

PLAN VIEW

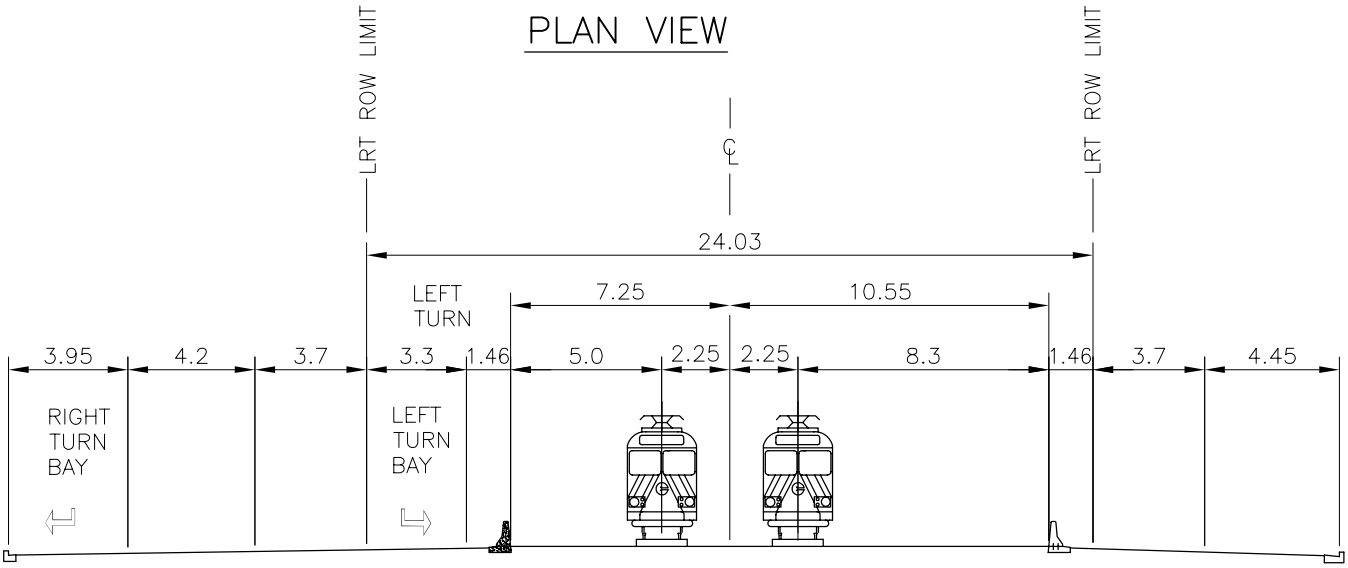

A–A SECTION VIEW

		FIGURE 18.2 4 LANE CROSS–SECTION ALL PEDESTRIAN CROSSINGS	CHAPTER 18 STREETS DESIGN
Date	Revision		

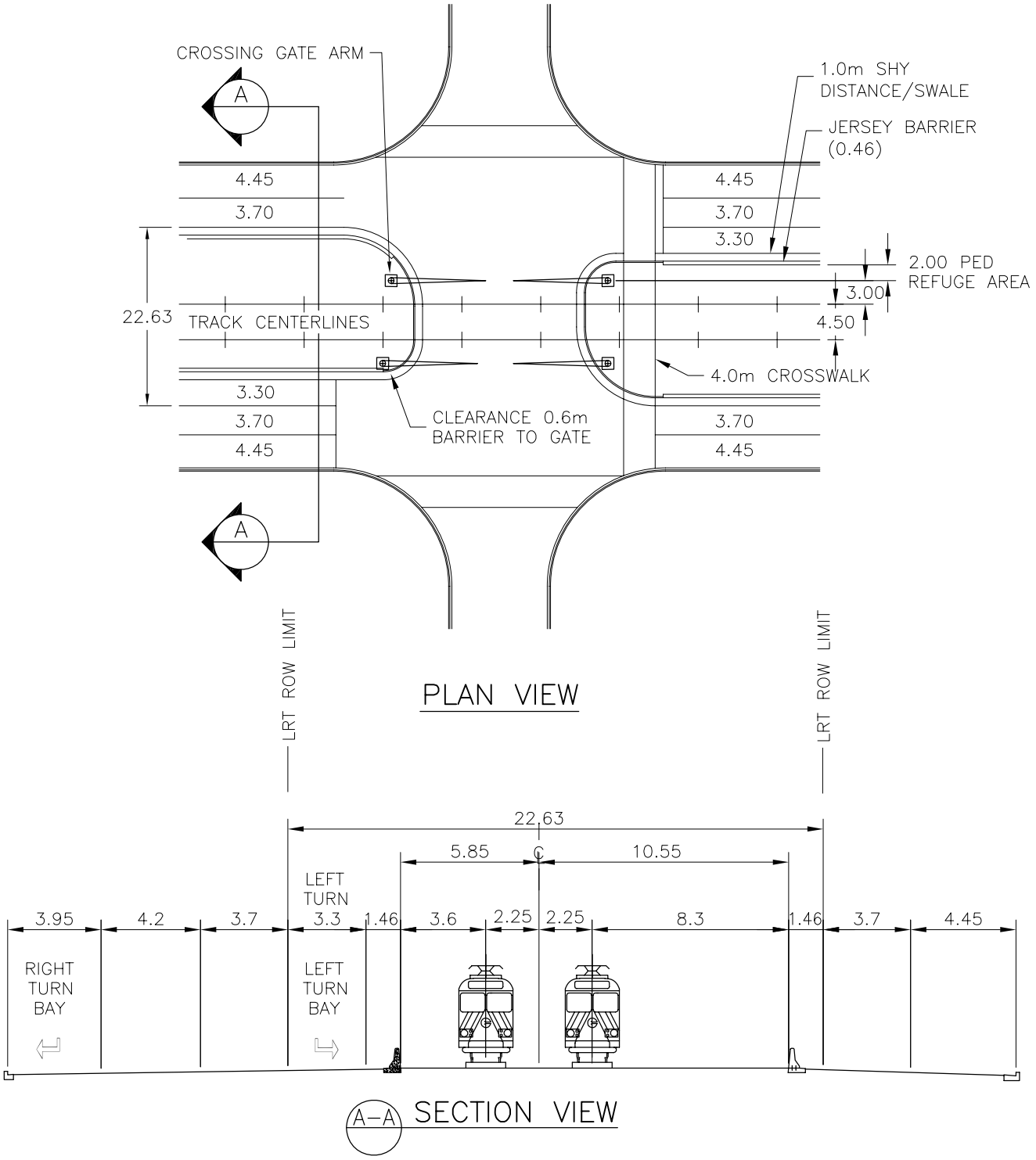

		FIGURE 18.3 4 LANE CROSS–SECTION PEDESTRIAN CROSSINGS ONE SIDE ONLY	CHAPTER 18 STREETS DESIGN
Date	Revision		

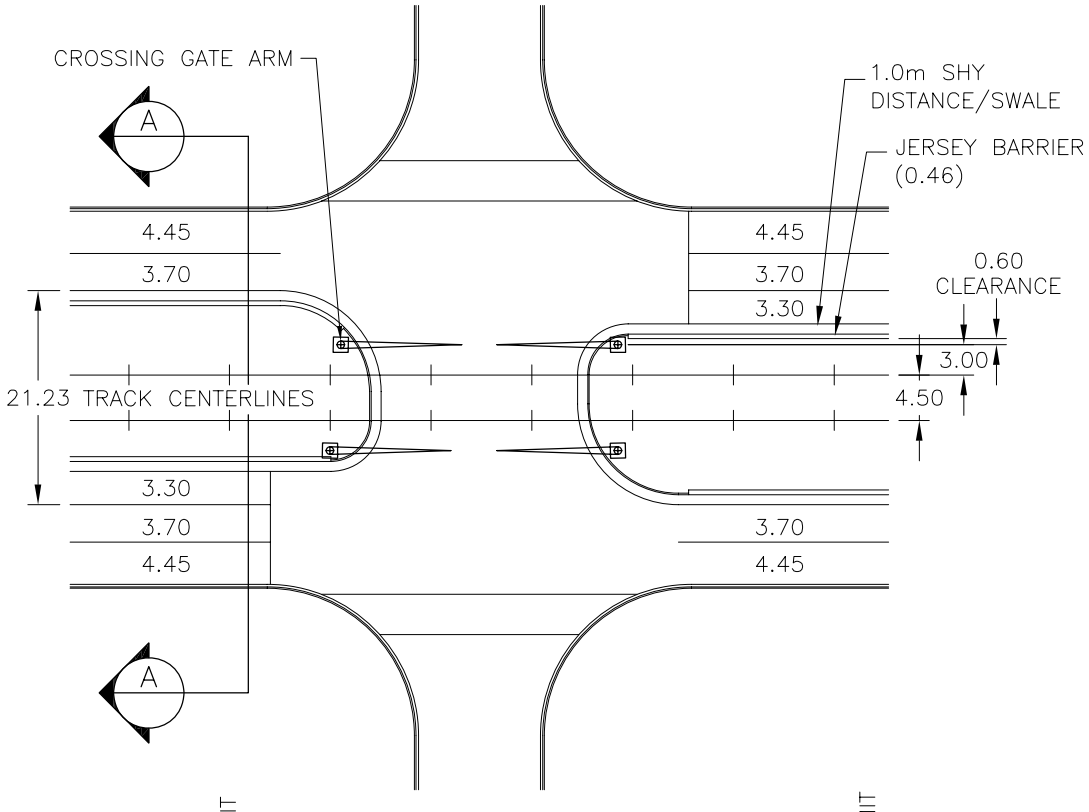

PLAN VIEW

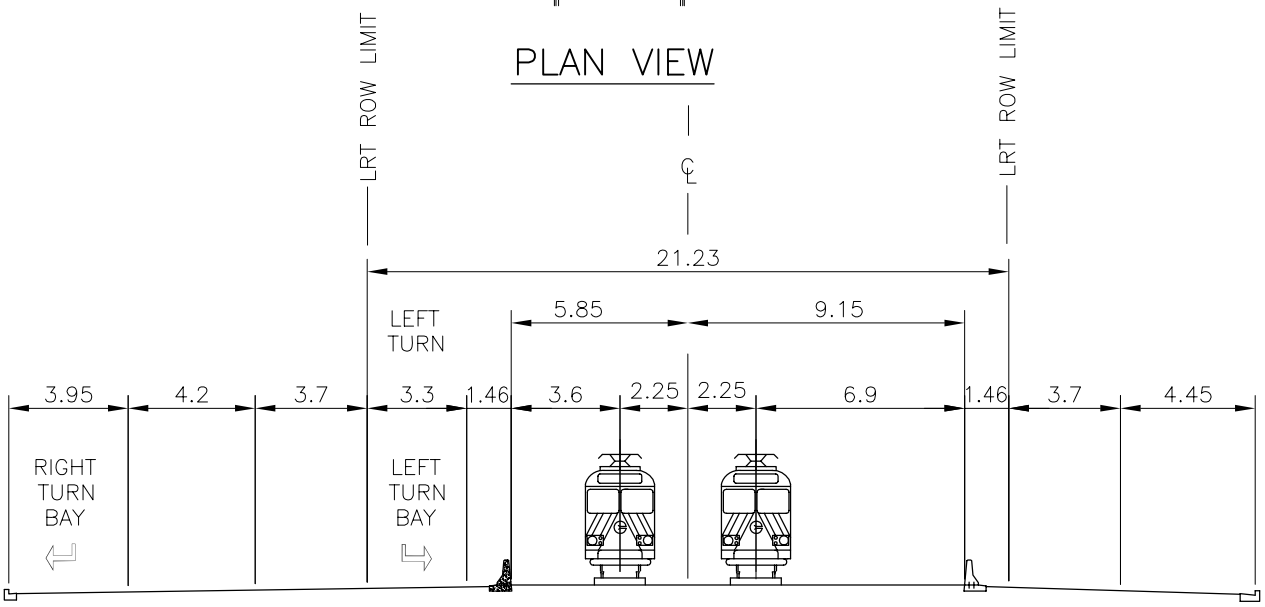

A–A SECTION VIEW

		FIGURE 18.4 4 LANE CROSS–SECTION NO PEDESTRIAN CROSSINGS	CHAPTER 18 STREETS DESIGN
Date	Revision		

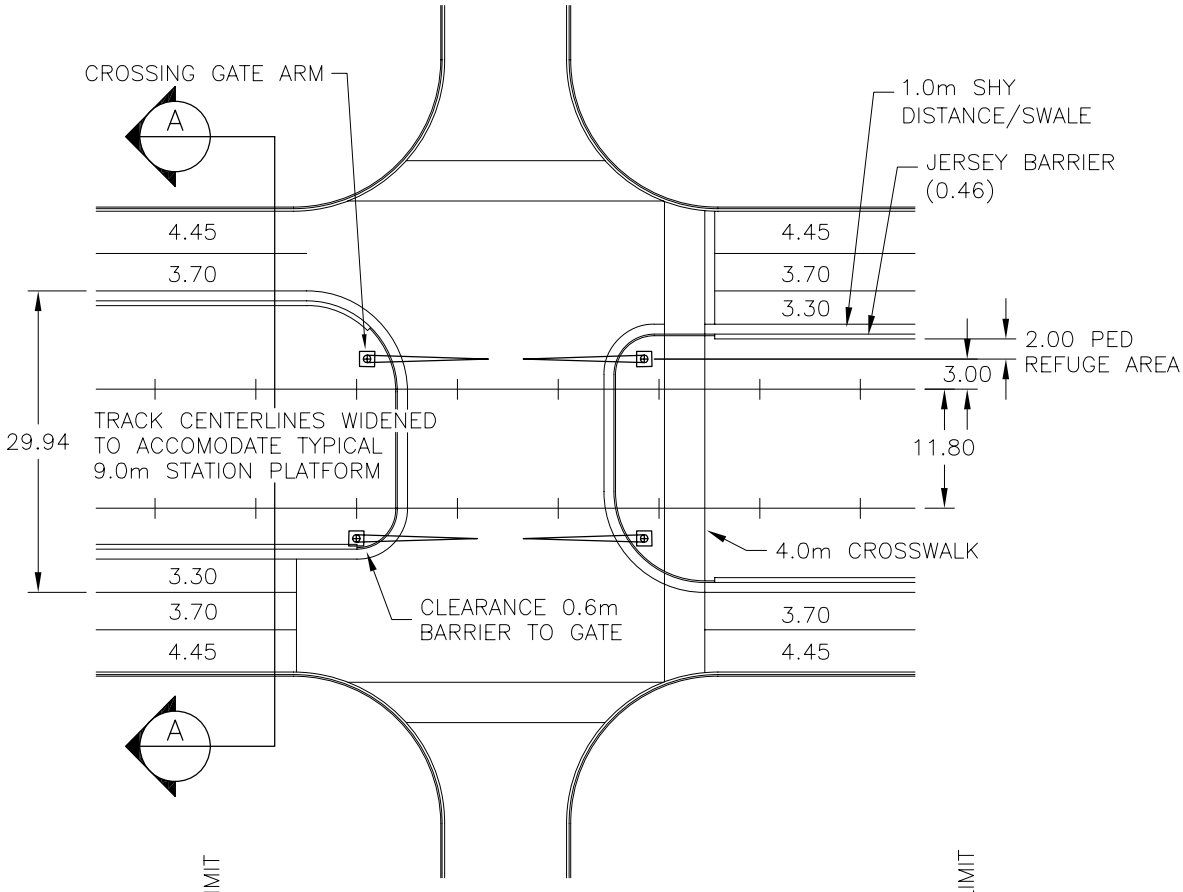

PLAN VIEW

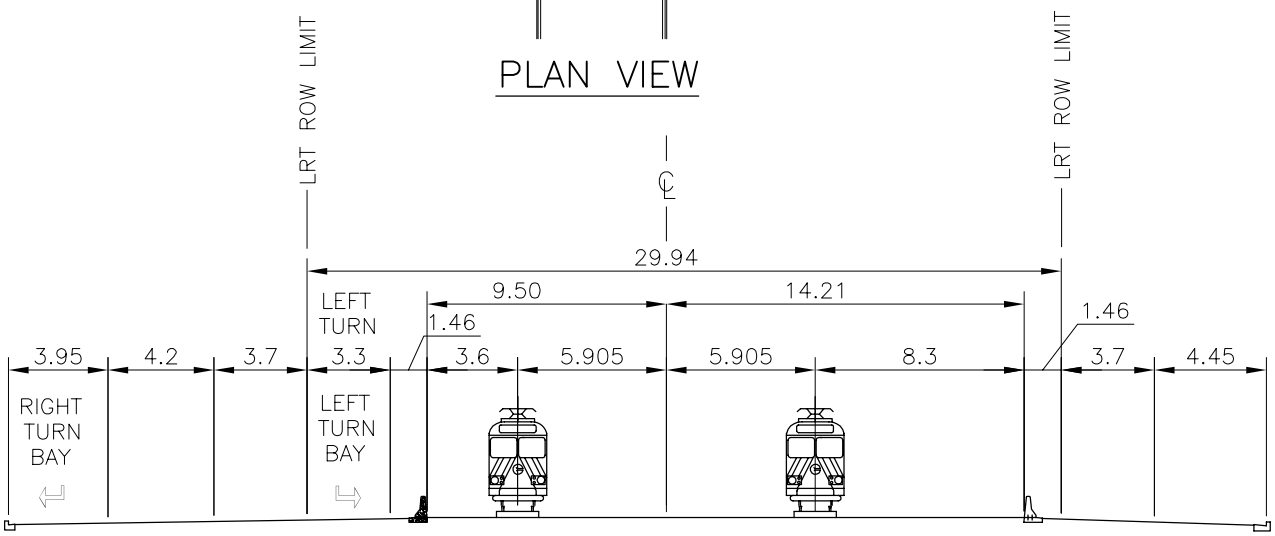

A–A SECTION VIEW

		FIGURE 18.5 SECTION WIDENED FOR LRT STATION PEDESTRIAN CROSSINGS ONE SIDE ONLY	CHAPTER 18 STREETS DESIGN
Date	Revision		

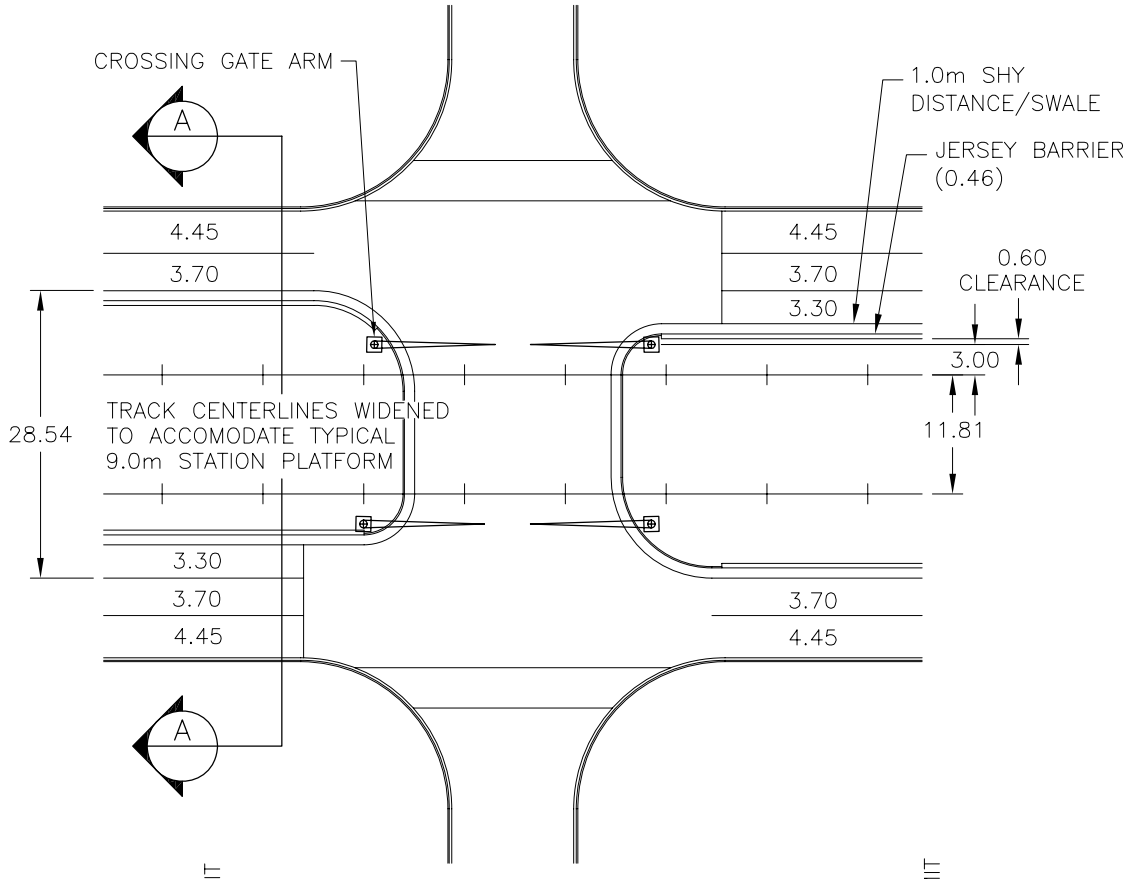

PLAN VIEW

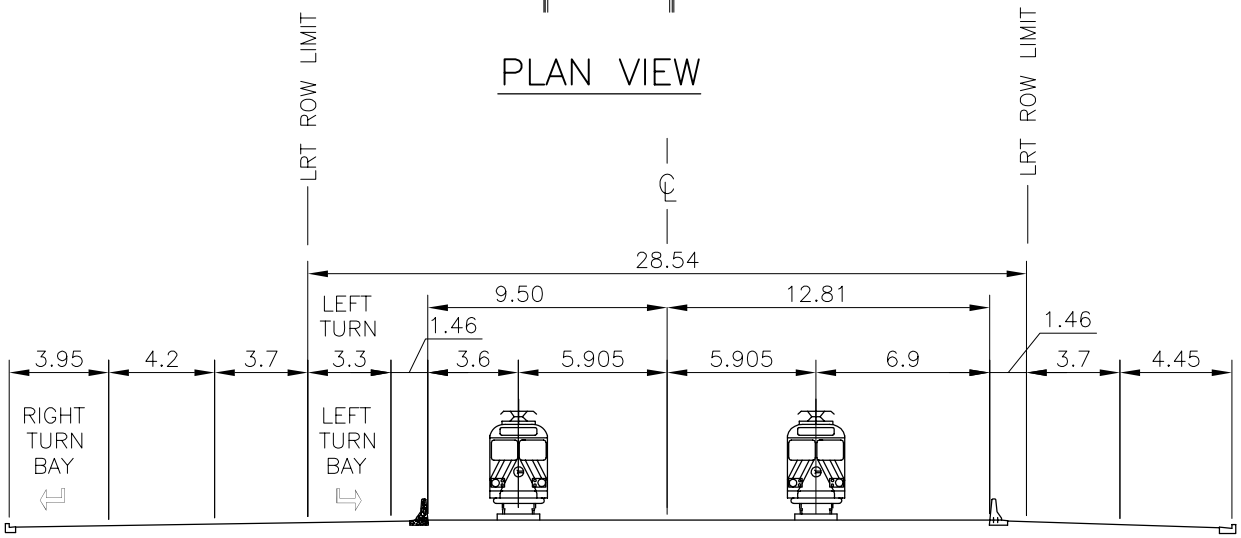

A–A SECTION VIEW

		FIGURE 18.6 SECTION WIDENED FOR LRT STATION NO PEDESTRIAN CROSSINGS	CHAPTER 18 STREETS DESIGN
Date	Revision		

LRT DESIGN GUIDELINES

Chapter 19

2017 EDITION – Revisions Tracking Form

Section	Reference	Revision General Description	Issue Date
		NO UPDATES FROM 2011 EDITION	July 2017

19.0 PARKADES

		Page
19.0	**PARKADES**	**1**
19.1	GENERAL	1
19.1.1	Introduction	1
19.1.2	Abbreviations and Definitions	1
19.1.3	Applicable Codes, Standards, Practices, and Reference Guidelines	1
19.2	FUNCTIONAL DESIGN OF PARKADES	2
19.2.1	Usage Projections	2
19.2.2	Required Level-of-Service	2
19.2.3	Accessibility for Persons with Disabilities	2
19.2.4	Emergency Access	2
19.2.5	Street Access	3
19.2.6	Access Control Devices	3
19.2.7	Above vs. Below Ground Structure	3
19.2.8	Vehicular Circulation	4
19.2.9	Parking Geometry and Layout	4
19.2.10	Pedestrian Circulation	5
19.3	BUILDING REQUIREMENTS	6
19.3.1	Classification	6
19.3.2	Required Service Areas	6
19.3.3	Architectural Finishes and Landscaping	6
19.3.4	Mechanical Requirements	7
19.3.5	Electrical Requirements	7
19.3.6	Communication Requirements	7
19.3.7	Structural Requirements	7
19.3.8	Drainage	8
19.3.9	Maintenance and Operation Considerations	8
19.4	SECURITY	9
19.4.1	Safety Audit	9
19.4.2	Passive Security	9
19.4.3	Active Security	10
19.5	SIGNAGE, GRAPHICS, AND PAVEMENT MARKINGS	12
19.5.1	General	12
19.5.2	Signage	12
19.5.3	Graphics and Painting	12
19.5.4	Pavement Markings	12

List of Appendices

Appendix 1 – Parkades Level of Service

19.0 PARKADES

19.1 GENERAL

19.1.1 Introduction

This chapter presents the basic guidelines for the design of park and ride parkades for the LRT System. The Guidelines presented in this chapter are limited to parkades only. They are not applicable to surface parking lots, which are presented previously in Chapter 18, Streets Design. Furthermore, this chapter focuses on free stranding parking structures as opposed to parking under buildings. These guidelines present the criteria needed by Designers to complete the preliminary and final design of parkades.

19.1.2 Abbreviations and Definitions

Abbreviations:

LOS	Level-of-Service
NPA	National Parking Association
PCC	Parking Consultants Council
UV	Ultra-Violet

Definitions:

Access Controls consist of two primary components - parking access controls and revenue controls. Parking access controls regulate the vehicles entering and exiting the structure. These can include but are not limited to automatic gates, manually-operated gates, etc. Revenue controls facilitate the collection of parking fees (if required). These devices can include ticket booths, ticket machines, etc.

Level-of-Service (LOS) is a method of determining the quality of transportation infrastructure. Primary qualitative factors taken into consideration are speed, time, and ease of use.

Open-Air Storey is a floor that has at least 25% of its exterior perimeter wall open to the outdoors that allows for air to flow across the entire storey, (based on ABC criteria).

Parkades are structures located near or adjacent to LRT stations. Their primary function is to provide vehicle parking for LRT patrons who are riding the LRT to and from work, shopping or major sporting events. They are also referred to as parking structures or parking facilities.

19.1.3 Applicable Codes, Standards, Practices, and Reference Guidelines

Unless stated otherwise, parking structures and their related ancillary facilities must be designed to meet all requirements of the latest edition of all applicable federal, provincial, and municipal codes and regulations.

Codes and Standards

Alberta Building Code (ABC)
Canadian Standards Association (CAN/CSA) Standard S413 Parking Structures
City of Edmonton Zoning Bylaw 12800
Illuminating Engineering Society of North America (IESNA) RP-20 Lighting for Parking Structures

Standards and Policies

Accessibility to City of Edmonton Owned and Occupied Buildings
City of Edmonton Policy C-458A – Percent for Art to Provide and Encourage Art in Public Places
City of Edmonton Specifications for LRT Elevators and Escalators
ETS Signage Standards – Light Rail Transit Graphic Standards Manual
Landscape Guidelines for South LRT Extension – UMA 2001

Reference Guidelines

Accessibility and Design Guidelines for the Visually Impaired
Americans with Disabilities Act (ADA)
Barrier-Free Design Guide – Alberta Safety Codes Council
Crime Prevention Through Environmental Design (CPTED) Principles
Design Guide for a Safer City – City of Edmonton Planning and Development
Parking Structures – Anthony P. Chrest, Mary S. Smith, Sam Bhuyan
ISBN 0-442-206

19.2 FUNCTIONAL DESIGN OF PARKADES

A number of factors such as: the type of user, size and dimensions of the parkade site, floor to floor height, parking geometry, peak hour volumes, and flow capacity will influence the functional design of a parking facility. These factors and others are outlined in greater detail in the following sections.

19.2.1 Usage Projections

All usage projections and required soft capacities for parking structures should be obtained from the City or a source explicitly approved by them.

19.2.2 Required Level-of-Service

The PCC of the NPA recommends that parkade design be based on a preferred minimum of “B” LOS. The Designer must confirm the LOS to be applied with ETS prior to proceeding into preliminary design. Refer to Appendix 1 – Parkade Levels of Service.

These recommendations cover all aspects of the functional design of parking structures ranging from stall size, circulation and flow patterns, queuing, entrance and exit designs, ramp designs, etc.

19.2.3 Accessibility for Persons with Disabilities

The parkade must be accessible by persons with disabilities and meet the requirements of Chapter 15 Accessibility, the Barrier-Free Design Guide, and the ABC.

19.2.4 Emergency Access

Chapter 10 Stations and Ancillary Facilities, Section 10.3.3 provides requirements for emergency access and egress. The City also prefers that the structure be designed to allow for access by *emergency vehicles, such as ambulances. As a minimum, the facility must allow for access by emergency personnel and stretchers throughout by means of elevators.

***Note:** The Designer will require specific information about the vehicle such as its dimensions and weight.

19.2.5 Street Access

Entrances and exits should be designed to allow for easy maneuverability of vehicle traffic. Obstructions to pedestrian and vehicle sight lines at entrances and exits should be minimized.

Entrance and exit lanes must be designed to meet the requirements of the *City Design Standards* and Bylaw 12800 as well as to achieve a preferred minimum "B" LOS during peak hours per the recommendations of the PCC of the NPA as indicated in Section 19.2.2. The effects of installing access control devices on the flow of traffic must be accounted for when determining the design Level-of-Service.

Provisions must be made by the Designer to allow for the future installation of access control equipment that may include but is not limited to: manned pay booths, card readers, ticket dispensers, and/or automatic gates. All entrance/exit medians must be able to accommodate automatic or manually-operated gates and/or manually operated ticket booths installed at a later date.

The following additional requirements should be met:

- Avoid direct access to the parkade from a major roadway. A secondary access roadway from the main road should be provided if required by Bylaw 12800.
- Direct access from residential streets should be avoided, where possible.
- The access roadway must provide sufficient storage to meet the expected demand generated by peak period transit ridership and to avoid having vehicular traffic queuing onto the public street.
- Avoid conflicts between the access road and pedestrian/bicycle flow corridors and access points.
- Strive to provide more than one entrance roadway to large parkades (more than 1000 stalls).

Three entrance/exit lanes must be provided at each entrance/exit with a reversible centre lane to accommodate fluctuations during morning and evening peak hourly flows. These three lanes must be separated by medians designed to meet the requirements of the *City Design Standards* and allow for future access control.

The Designer must include the provision for the parkade to be securely locked down to vehicles and pedestrians to prevent the potential for vandalism and tampering with the structures security. All vehicle and ground level pedestrian entrances and exits must have a rolling steel door or equivalent. Stairwells and connecting pedestrian walkways to adjacent structures must have doors that can be locked to prevent access to the parkade but still allow any patrons remaining inside to exit.

19.2.6 Access Control Devices

The City currently prefers that there are no access restrictions to parkades and ETS patrons are not charged a parking fee. The Designer is not required to provide include any form of access control devices in the design. However, provision should be made for the installation of access control devices in the future in case the operating philosophy of the City changes.

19.2.7 Above vs. Below Ground Structure

Above ground parkades are preferred by the City as underground structures are generally more expensive to construct and require mechanical ventilation and fire protection systems. Patron security is also more difficult to achieve in underground structures.

All underground parking structures require complete coverage by Active Security methods including CCTV, manned security patrols, and the provision of emergency intercoms/panic buttons.

19.2.8 Vehicular Circulation

Parking spaces and internal traffic aisles should be designed to allow for easy maneuverability of vehicle traffic. The type of circulation system is dependent upon the individual structure and should be selected by the Designer in conjunction with the City.

A one-way four bay side-by-side ramped parking structure for vehicular circulation is preferred. The floors along the exterior are horizontal for architectural reasons. The vehicular circulation system must be selected and designed to maintain an appropriate LOS as required by Section 19.2.2. Selection should consider, but may not be limited to, the following:

- Land availability, size and dimensions
- One-way vs. two-way traffic system
- 90 degree vs. angled parking (refer to Section 19.2.9)
- Parking on ramps
- Maximum allowable ramp slopes;
- Size of parkade (i.e. number of stalls required);
- Minimizing travel distances, turns, and conflicting vehicle movements;
- Dispersing traffic throughout the structure.

Turning radii and driving lane widths must meet a preferred minimum “B” LOS according to the recommendations of the PCC of the NPA as required by Section 19.2.2.

There are a wide range of types of ramps that can be used to obtain efficient vehicular circulation throughout the structure including circular, express, speed, and including parking ramps.

Special transition ramps are required whenever the change in slope at ramps is greater than 8%. The transition ramp must have a minimum length of 3.7 m and have a slope that splits the transition in half.

Ramp slopes should be minimized by maximizing ramp length. The preferred maximum slope of ramped parking is 4.0% and the absolute maximum slope is 6%. The limits for slopes for other types of ramps are determined by the LOS approach of the PCC of the NPA.

19.2.9 Parking Geometry and Layout

Coordination with the City is required to determine the design vehicle dimensions and loads. They can include, standard passenger vehicles, emergency vehicles, snow removal and maintenance equipment.

19.2.9.1 Stall and Aisle Sizing

The stall and aisle dimensions must meet the following requirements:

- Clause 54 of City of Edmonton Bylaw 12800,
- Section 18.7.3.3 for Standard vehicle parking at 90 degrees,
- Section 15.4.3 for Accessibility vehicle parking, and
- Preferred “B” LOS according to the PCC of the NPA.

The City prefers the following more stringent requirements:

- Standard vehicle spaces have a width of 2.75 m and a depth that varies from 5.5 m for Straight (90 degree) stalls to 4.75 m for Angled (60 degree) stalls (measured perpendicular to the wall face).
- Maintenance vehicles stalls are identical to standard vehicle spaces.
- All accessible vehicle spaces must be Straight (90 degree) stalls and have a width and depth of 3.7 m and 5.5 m, respectively.

- At the head of the parking stall, the horizontal clearance between the front face of the curb/wheel-stop to any obstruction must be a minimum of 0.9 m.
- At the side of a parking stall adjacent to wall, raised planters, or any other obstructions, provide an additional 0.3 m minimum clearance beyond the width of the parking stall.
- Aisle widths must be a minimum of 5.5 m for one-way traffic and 7.0 m for two-way traffic.

19.2.9.2 Stall Layout

Parking must be provided by Straight parking stalls for areas where there is two-way traffic flow and by Angled parking stalls for areas where there is one-way traffic flow.

Accessible parking should be located close to elevators, to means of disabled access, to station entrances, to pedestrian walkways, to pedestrian circulation routes, etc.

Parking of over-height vans should be limited to the ground floor level.

A minimum of four (4) parking stalls must be reserved and labeled for City Operations and Maintenance service vehicles adjacent to a station entrance. At least one (1) parking stall must be reserved and labeled near each exit/entrance having a control booth or room.

19.2.9.3 Overhead Clearances

In general, an overhead clearance of 2.75 m or greater throughout the facility is preferred. Provision must also be made to provide clearance for maintenance and tow trucks to all levels (refer to Section 19.2.4). Access by emergency vehicles may be a consideration as well. The true vehicle clearance is most critical at ramp transitions and must be checked against the allowable overhead clearances.

Headache bars must be provided at all entrances/exits and at any change in vertical clearance throughout the parking structure. The purpose of the bars is to provide an advance warning to vehicle drivers of the height restrictions and to protect the structure from damage caused by over-sized vehicles. Headache bars, as well as all connections and hardware, must be designed for the appropriate wind loads and a vehicle impact load of 1.5kN.

19.2.10 Pedestrian Circulation

Design a parkade layout that encourages pedestrians to walk down aisles to increase their visibility to vehicle drivers. Travel distance for pedestrians along aisles and pedestrian walkways should be minimized. When pedestrian flow cannot be oriented parallel to the aisles or when aisle lengths exceed 122 m in length, separate pedestrian sidewalks perpendicular to the aisles are acceptable. These pedestrian sidewalks must be clearly marked and meet the requirements of the *City Design Standards.*

Signage, graphics, and pavement markings must be provided to assist and direct pedestrian flow around each floor of the parking structure (refer to Section 19.5).

All pedestrian walkways and egress/access points must be well illuminated, highly visible, and located to provide safe pedestrian movements, protected from vehicular traffic and those with criminal intents.

The requirements for and the design of stairwells must comply with the ABC as well as Chapter 10 Stations and Ancillary Facilities Section 10.3.4.2, Chapter 15 Accessibility Section 15.3.2.2, and Chapter 16 Safety and Security Section 16.4.2.5. At least one (1) stairwell located adjacent to each elevator is preferred.

The requirements for and the design of elevators must comply with the ABC as well as Chapter 10, Section 10.3.4.5, Chapter 15, Section 15.3.2.5, and Chapter 16, Section16.4.2.5. Elevators should be located in the direction of the walking patron's destination (i.e. near a pedway or in this case, the LRT Station).

Non-slip surfaces should be installed on stairs and in elevator lobby areas (refer to Chapter 10 Stations and Ancillary Facilities, Section 10.11.4.1).

19.3 BUILDING REQUIREMENTS

19.3.1 Classification

Parkades must be designed for a 75 year service life. According to the ABC they are classified as Group F, Division 3 structures. The City prefers that the parking structure is designed such that no fire protection and mechanical ventilation systems are required. Therefore in accordance with the ABC:

- Each storey can be considered an open-air storey,
- The building is of non-combustible construction,
- The building is less than 22 m high (measured from the grade to the ceiling of the top storey),
- The building area is less than 10 000 m^2,
- No part of the floor area is greater than 60 m from an exterior wall opening.

19.3.2 Required Service Areas

Parkades may require rooms or dedicated areas to house staff and a variety of equipment and related cleaning material etc. The requirement for these facilities will be determined on an individual structure basis by the Designer, in conjunction with the City.

In general, the requirements are:

- Elevator Machine room housing all elevator equipment to properly maintain elevators as required by local inspection authorities. The requirements of the elevator codes and the manufacturer including outlets, lighting, and HVAC must be adhered to.
- Electrical room housing high voltage equipment and other electrical equipment.
- Communication room housing CCTV and PA racks, telephone system backboards, and other communication related equipment. This room, subject to the type and amount of equipment it houses, may be required to be air conditioned. (refer to Chapter 10, Stations and Ancillary Facilities, Section 10.4.4).

  Note: The Electrical and Communication equipment rooms can be amalgamated in one room if it is reasonable to do so.

- Maintenance/Mechanical room housing water pumps and other mechanical systems as well as providing storage for maintenance items. Chapter 10 Section 10.4.4.2, indicates the requirements for Utility Storage rooms that must be included in the Maintenance/Mechanical room, or provided for separately.
- Security Office/Control room housing all controls, devices, equipment, storage, and other items required for the regular operation of the facility. This room should also provide a washroom, small work/lunch table and lockers for facility operators.

  Note: Public washrooms should not be provided in parking structures as they pose a direct security concern.

19.3.3 Architectural Finishes and Landscaping

The Designer should refer to Chapter 14 Impact Mitigation, Aesthetics, ROW Control Section 14.3, for aesthetics and landscaping requirements. Clauses 54.2 and 55.0 of City of Edmonton Bylaw 12800 provide additional landscaping requirements.

Trash receptacles should be included at various locations around the structure along pedestrian routes and must be included at stairwells and elevator lobbies to help maintain cleanliness. Trash receptacles must meet the requirements of Chapter 10 Section 10.6.5.2.

19.3.4 Mechanical Requirements

Refer to Chapter 12, Mechanical Systems for the mechanical systems requirements. Mechanical venting and fire protection systems are not required when the provisions of Section 19.3.1 are met.

The provision of heated service rooms should be confirmed with the City early in the design stage. From a maintenance perspective a primary consideration for heating is the *type of equipment to be installed in the service room. If heated, a temperature of 20°C should be maintained.

***Note:** Some air compressors have difficulty starting at lower temperatures and therefore heating is required.

Heating systems must conform to the regulations of the ABC and Section 12.5.

A water system must be provided so that regular cleaning and maintenance of the parking and other surfaces can be carried out on a regular basis. Hose bibs or other water outlets must be provided evenly around the structure and be tamper resistant. This system must be accessible, reliable, provide equal pressure through the structure, and be drainable /closeable in the winter to avoid frozen pipes (if the system is not heated and insulated).

To allow for easy maintenance and to prevent corrosion problems conduits or piping must not be imbedded in the superstructure.

19.3.5 Electrical Requirements

Refer to Chapter 11 Electrical Systems, for the electrical system requirements. Lighting must meet the requirements of Clause 51.0 of City Bylaw 12800, Chapter 10 Stations and Ancillary Structures, Section 10.2.7, Chapter 11 Electrical Systems Section 11.10, as well as Section 19.4.2.

The requirement of individual stall plug-ins for patrons should be confirmed with the City early in the preliminary design stage.

Emergency power systems must meet the requirements of Chapter 11 Electrical Systems, Section 11.7. Sufficient power must be supplied to provide emergency lighting for patron safety and emergency elevator operation for accessibility. If a permanent emergency stand-by generator is required, refer to Section 11.7.3.

To allow for easy maintenance and to prevent corrosion problems conduits or piping must not be imbedded in the superstructure.

19.3.6 Communication Requirements

To allow for easy maintenance and to prevent corrosion problems conduits or piping must not be imbedded in the superstructure.

19.3.7 Structural Requirements

19.3.7.1 General

The structure must use long-span construction to avoid the presence of columns in individual parking modules.

19.3.7.2 Loads

Live loads for these structures should be established in accordance with the ABC. Three types of live loads must be considered:

- A gravity uniformly distributed load on the floor.

- According to the ABC, a uniformly distributed load of 2.4 kPa is considered for passenger cars.

- A gravity concentrated load on the floor.
  - Individual concentrated loads as per Clause 4.1.6.10 of the ABC.
  - A gravity concentrated load on the floor surface of 20 kN is applied over an area of 13 000 mm^2. This load represents the load applied by a hydraulic jack while lifting a portion of the weight of a 3 600 kg vehicle over the approximate area of a jack. This point load may influence local connections but should not be assumed to act throughout a floor. Pattern loading should not be considered.

- A horizontal concentrated load on any barriers or vertical elements.

In addition, the Designer must provide loading allowances for snow removal equipment, and snow piling, including the provision for snow removal by means of a snow chute (refer to Section 19.3.9).

19.3.7.3 Durability

The concrete design must meet the following:

- The requirements for concrete materials in CAN/CSA S413.
- The equivalent minimum levels of corrosion protection that is given in Table 1 of CAN/CSA S413.
- Measures are provided to minimize and control cracking in all concrete work.

19.3.8 Drainage

The drainage system must meet the requirements of CAN/CSA S413 and Chapter 18 Streets Design, Section 18.7.3.8. including the pertinent provisions of Volume 3 of the *City Design Standards.*

Water at design peak flow must be prevented from spreading a horizontal distance greater than 610 mm from the face of any curbs, walls, or other vertical barrier. The design must prevent storm water from flowing into stairwell and elevator openings and should limit the ingress of precipitation into the interior of the structure, where possible.

19.3.9 Maintenance and Operation Considerations

19.3.9.1 General

The effects of all design decisions on the Parkade operation and future maintenance requirements must be considered. Where possible, minimize joints and connections in slabs and pavements to avoid high maintenance locations. Devices should be vandal resistant and preferably constructed out of stainless steel, galvanized steel, plastics, or coated to prevent early deterioration.

A waterproof membrane coating system must be placed on the floor to provide protection and prevent delamination. A minimum five (5) year warranty is required by the City. Regular inspection of the membrane must be carried out.

Locations likely to attract nesting of birds should be minimized. Consider the use of bird deterrent devices where potential nesting locations cannot be designed out.

19.3.9.2 Operations & Maintenance Plan

The Designer should coordinate with the City in the development of an O & M plan. This plan should include, but is not limited to the following:

- Cleaning, Inspection and Maintenance

Recommendations regarding cleaning, inspection and maintenance to expansion, control, and construction joints including provision of replacement schedules.

Regular joint inspection and replacement must be scheduled and coordinated with the City at the time of construction

- Snow removal

  The snow removal plan should make use of the City's resources where possible. This plan must include the provision for snow removal on the roof to minimize snow piling and still allow for parking on the roof structure during winter. Snow removal equipment must be equipped with rubberized blades to prevent damage to expansion, control, and construction joints. A snow chute or other means of removing the snow from the roof must be provided.

  Specific details on the allowable limits of snow piling, snow removal vehicles, and the snow removal process must be included.

- Wash-down/cleaning schedule.

  A schedule of regular wash-downs to clean the parking service must be included. The objective of this schedule is to prevent the build-up of de-icing salts that can cause potential corrosion problems.

19.4 SECURITY

Security of patrons in parking facilities is of paramount importance to the City. The Designer must refer to Chapter 16 Safety and Security, and Clause 54.7 of City Bylaw 12800 for safety and security requirements.

19.4.1 Safety Audit

To determine the structure's risk level and the safety features required to mitigate the risk the Designer must complete a safety audit, including a CPTED review, at the preliminary design stage. A preferred reference to help perform the Safety Audit and design the structure for safety is the recommendations of the PCC of the NPA produced in "Security Design for a Parking Facility". The audit documents due diligence in designing a safe structure may assist in reducing insurance premiums

19.4.2 Passive Security

Passive Security features are provided by the physical design of the structure including lighting and incorporate CPTED principles. The following requirements for Passive Security features must be met in all parkades. Chapter 16 Safety and Security, Sections 16.4.2 and 16.4.3 provide additional passive security requirements.

19.4.2.1 Lighting

Lighting is a highly important form of passive security.

The lighting requirements for a "B" LOS according to *RP-20 Lighting for Parking Facilities by IESNA must be met throughout the structure for safety purposes as follows:

- Provision of well-lit and uniform light levels throughout the structure including edges of parking stalls and driving aisles
- Night-time lighting levels must be high enough to allow the parkade patron to detect, recognize, and identify objects and events without causing glare
- Minimize glare by careful selection and positioning of fixtures.
- Avoid shadows created by weak and uneven lighting
- Avoid spotlighting points, which leaves surrounding areas dark

*IESNA RP-20 recommended lighting levels are as follows:

General areas – 54 lux average at pavement
Entrance, kiosk, gate areas – 540 lux
Corners and ramps – 110 lux

Note: If security cameras are to be installed levels may need to be higher

For other areas not stated above refer to Chapter 11 Electrical Systems, Section 11.10.4.

All lighting devices must be easy to maintain, reliable, weather resistant, and vandal-resistant.

Emergency lighting must be provided through the parking structure in case of local power failure.

19.4.2.2 Structure Design

The Designer must use open facades on all sides of the structure to maximize natural surveillance.

Stairwells must have maximum allowable openings to allow for natural light and surveillance. The City prefers that two (2) or more of the walls surrounding stairwells be open having windows covering these walls. These stairwells should be located in the exterior corners of the parkade to allow the opportunity for natural surveillance.

The design requirements for elevators can be found in Chapter 10 Stations and Ancillary Facilities, Section 10.3.4.5, and Chapter 16 Safety and security, Section 16.4.2.5. It is preferred that as many of the sides of the elevator car are transparent as possible at each stop position.

All openings at ground level or another other levels where pedestrians can climb into or access the parking structure that are not intended for pedestrian use must be fenced off. Chain-link wire fencing is preferred as it provides openness and allows for natural surveillance.

Any small interior spaces in which a person can hide should be closed in or fenced off. If feasible, use these areas for storage.

Local retailers should be encouraged to open businesses around the parking structure to increase pedestrian flow in the vicinity of the parkade.

All landscaping at ground level must be designed to avoid the creation of hiding locations for persons which may have criminal intents.

19.4.2.3 Painted Surfaces

To improve the overall brightness and light uniformity in the structure while helping to create a sense of well-being, the interior of the structure must be painted a bright color. White is preferred on all walls, ceilings including stairways. Some exceptions can be made when painting the walls if this wall space is required by Section 19.5 for pedestrian or vehicular way-finding symbols and graphics.

For dust control, all service rooms walls and ceilings surfaces should be painted as well, preferably in white. Refer to Chapter 10, Stations and Ancillary Facilities Section 10.11.4.4.

19.4.3 Active Security

Active Security features are those that involve both human activities the use of specialized equipment and devices. They include CCTV systems, manned security patrols, emergency telephones, emergency intercoms and panic buttons. Design requirements for active security features in the LRT System are presented in Chapter 16 Safety and Security, Section 16.4.1. They must be supplemented by Section 19.4.4 that provides requirements specific to parkades.

19.4.3.1 CCTV System

CCTV systems in parkades must meet the global requirements for the entire LRT System stated in Chapter 8, Communications and Control, Section 8.9 and Chapter 16 Safety and Security, Section 16.4.1.2. The Designer must consider the required coverage of the system based upon the security risk of the structure as determined by the Security Audit (refer to Section 19.4.1).

The Parkade design consultant should strive to maintain unobstructed views and provide adequate lighting of persons, property, and vehicle parking activity in the following areas:

- Ticket Distribution and Payment Equipment
- Operator Booths
- Entrances to Service Rooms
- Emergency Telephones
- Emergency Intercoms/Panic Buttons
- Elevator Interiors
- Elevator Entrances/Exits
- Stairwell Entrances/Exits at all levels
- Stairwell Interiors
- Vehicle Entrances and Exits
- Pedestrian Entrances and Exits

Cameras should be positioned to avoid directly viewing headlights. Camera technology should be selected to effectively handle extreme lighting conditions. In the case of “open” parking structures, camera positioning should also be avoided not to view directly outdoors from within the interior of the structure.

Parked vehicles, sloping floors, and shadows make it difficult to position surveillance cameras to fully cover all areas. Subject to a Cost – Benefit Analysis consideration may be given, to the installation of CCTV cameras that ride a track back and forth along the length of the parking aisles. The camera(s) can provide coverage of the areas between parked vehicles. A variety of control mechanisms are available that can be used to move the camera(s) to the specific locations to be observed.

If the initial design of the CCTV system does not provide complete parkade coverage, provision must be made to allow for future expansion of the coverage to cover the entire structure. A system that provides the minimum coverage required above as well as mobile coverage for the remaining areas of the parking structure is preferred.

19.4.3.2 Manned Security Patrols

Manned security patrols are referred to in Chapter 16 Safety and Security, Section 16.4.1.5. Patrols must be extended to include any transit park and ride parkades along the LRT system.

19.4.3.3 Emergency Telephones

Emergency telephones must be located at elevators and stairways at each level of the parking structure as well as any pedestrian access or egress locations from the structure. They should be highly visible and accessible. Design Guidelines are detailed in Chapter 8 Communications and Control, Section 8.6.1.2 and Chapter 16 Section 16.4.1.3.

19.4.3.4 Intercoms/Buttons

Emergency Intercoms/Panic Buttons should be located in highly visible and accessible locations throughout the parkade. They should compliment the locations of emergency telephones. They must be readily identifiable through the use of high visibility color/lettering markings.

Each device must have a direct connection to the ETS Control Centre located at Churchill Station and must be monitored by CCTV. When the device is activated a video recording is activated at the ETS Control Centre.

19.5 SIGNAGE, GRAPHICS, AND PAVEMENT MARKINGS

19.5.1 General

All parkade signage must be designed in accordance with the criteria presented in the Light Rail Transit Graphic Standards Manual. All markings and graphics should be clearly visible, simple, free from clutter, and easily read.

19.5.2 Signage

- Exterior parkade identification signs should be visible to passing motorists.
- Provide each parkade entrance with customer information signage i.e. displaying operational hours etc.
- Should be provided to direct pedestrians to means of egress including stairways and elevators.
- Locate signs at all decision points to direct drivers to available parking and exits. This will assist the vehicle driver in effective decision making and circulating efficiently.
- Illuminate signs that are critical to the operation of the parking facility during the night-time hours, so that they are visible to vehicular and pedestrian traffic.
- Should be UV resistant and non-corrosive.

19.5.3 Graphics and Painting

- Graphics should be used on each floor level to orientate patrons and to identify parking locations.
- Each floor level should be clearly labeled using numbers, color codes, and/or symbols to help patrons locate their vehicle quickly and easily.
- The forgoing means of identification must be provided in stairwells as well as elevator lobbies and cabs.
- The use of bright background colors enhances the safety and security of the parkade.

19.5.4 Pavement Markings

- Label all parking stalls by providing 100 mm wide painted lines on the pavement surface.
- Label all accessible stalls as required by the Barrier-Free Design Guide.
- To control vehicle speed in the parkade provide standard speed bumps at appropriate locations.

Appendix I – PARKADES LEVEL OF SERVICE

Roadway designers have developed a system based on the degree of congestion that is acceptable to vehicle drivers. They have classified conditions by Levels of Service (LOS). As congestion increases LOS decreases.

As it is an extension of the road transportation system in a community, the LOS approach for parking facilities has also been adopted by the National Parking Association. Adapting a LOS approach for parking facility design permits qualitative measures of such factors as:

- Freedom to maneuver
- Delay
- Safety
- Driving comfort
- Convenience

The LOS approach is applicable to a number of parking design considerations including:

- Entry/exits
- Geometrics
- Flow capacity
- Travel distance
- Spaces passed
- Turning radii
- Floor slopes

***Parkades Level of Service Criteria**

		Acceptable	**Levels**	**of**	**Service**
Design Consideration	**Prime Factor**	**D**	**C**	**B**	**A**
Turning radii, ramp slopes etc	Freedom to maneuver	Employees			Visitors
Travel Distance, number of turns	Travel time	Visitors			Employees
Geometrics	Freedom to maneuver	Employees			Visitors
Flow Capacity	v/c ratio	Employees			Visitors
Entry/Exits	Average wait time	Visitors			Employees

*Parking Structures - Anthony P. Chrest, Mary S. Smith, Sam Bhuyan ISBN 0-442-20655-0. LOS based on PCC of the NPA recommendations.

Factors to Consider in Selecting a LOS

- If the Parkade Owner wants a more comfortable design as a marketing feature then LOS B or LOS A is applied. If parkade cost is a more paramount consideration and the parkade does not require superior comfort, then LOS D or C should be used.
- A lower LOS would may be appropriate as long as reasonable traffic flows and stall widths appropriate for an this type of parkade can be maintained. However, if paid parking is contemplated a lower LOS may not be acceptable.