INTEGRATED INFRASTRUCTURE SERVICES
Business Planning & Support - Facility Engineering Services
Infrastructure Planning & Design - Facility Planning & Design

Facility Design & Construction Consultant Manual

Volume 2

Technical Guidelines v3.0

13th Floor Edmonton Tower
10111 - 104 Avenue
Edmonton, Alberta
T5J 0J4

Edmonton

Date of Issue: October 2017

Contents

4 Technical Guidelines

4.1 *Introduction*

.1 This document is Consultant Manual - Volume 2 of 2, and contains Section 4 – Technical Guidelines. This document is intended to be used with Volume 1 of 2 to form a complete manual.

.2 The Consultant Manual – Volume 1 of 2 contains the following sections:

.1 Section 1 – Introduction. Establishes the scope of the document and gives general contact information.

.2 Section 2 – Design Process. Describes the information flow on a typical project, standard deliverables expected at each design phase and an overview of minimum document and CAD standards to be followed.

.3 Section 3 – Design Guidelines. Describes policies and design requirements specific to the City of Edmonton Community Services – Facility and Landscape Infrastructure that are to be considered when designing buildings. The contents of this section may not apply to all building projects.

.3 Consultant Manual – Volume 1 of 2 can be obtained from the Project Manager.

.4 No content in either volume of this manual is designed for verbatim specification use and in general content should not be copied directly into a book spec for any project unless the consultant is explicitly so instructed.

4.2 *General*

.1 This section contains technical guidelines to follow when designing new buildings or major renovations for the City of Edmonton. These guidelines are to be used in conjunction with professional judgment to ensure that they are followed only to the extent they are appropriate. Consultants remain ultimately responsible for design.

.2 More specifically, the intent of this section is to:

.1 Describe the minimum requirements for various building components, assemblies and systems that have an impact on serviceability and anticipated life cycle of the facility.

.2 Alert consultants to design aspects that historically have been problematic.

.3 Provide solutions or problem avoidance techniques that have been developed through experience and have proven to be practical and effective.

.4 Provide a vehicle for communicating departmental design standards to consultants in an effective and expedient manner.

.5 Indirectly, provide a basis for evaluating designs.

.3 No attempt is made to address every conceivable condition. Rather, common sense solutions are provided where experience has indicated that problems commonly arise. This experience can be applied to new designs as a preventative measure, and to existing buildings to address problems that are attributable to design and/or execution that does not conform to these

technical design requirements.

.4 Where these guidelines do not address a technical design issue that arises on a project, it is the consultant's responsibility to address it. When a requirement, though normally applicable, may not be appropriate for a specific project, the consultant should propose an alternative for consideration by the project team. This may include design of facilities for temporary or short term use.

.5 Innovative designs or products are encouraged after thorough consideration of potential benefits and risks, value analysis and life cycle cost. Consult project team members and persons with expertise in facility operation and maintenance.

.6 Designs are required to comply with all applicable codes and regulations. Where the technical design requirements contained herein differ from building codes and other applicable codes and standards, apply the more stringent requirements.

4.3 *Site Services*

4.3.1 References

.1 Alberta Environmental Protection:

.1 Standards and Guidelines for Municipal Water Supply, Wastewater and Storm Drainage Facilities

.2 Stormwater Management Guidelines

.3 Risk Management Guidelines for Petroleum Storage Tank Sites

.2 Alberta Fire Code, by the Alberta Fire Prevention Council

.3 City of Edmonton Design and Construction Standards. These documents can be found on the City of Edmonton website.

.4 City of Edmonton Policy C463: Access to City Buildings. This document can be found on the City of Edmonton website.

.5 Standard Guideline for the Collection and Depiction of Existing Subsurface Utility Data, CI/ASCE 38-02.

.6 Geometric Design Standards for Canadian Roads and Streets, by the Roads and Transportation Association of Canada

4.3.2 Site Selection

.1 Existing projects where work may affect landscaped areas will require coordination with Parks.

4.3.3 Site Survey Plan and Site Plan

.1 Include the following items on the site plan in the contract documents (CI/ASCE 38-02 or similar – Level D and C):

.1 Legal description and address of the property, property lines and their legal dimensions, and legal pins.

.2 Adjacent trees, sidewalks, roadways, utilities, easements and how the new development will

tie to them.

.3 Work of the contract and work by other forces and contracts.

.4 Main floor elevations and geodetic datum and the equated elevation.

.5 All utilities, including power, water, gas, storm and sanitary sewer, telephone, fibre and Supernet (required for Libraries).

4.3.4 Site Access

.1 Design the location of site access in consideration to driveways and intersections adjacent to and opposite the site.

.1 Consider accessibility, garbage pick-up, deliveries, fire and ambulance.

4.3.5 Site Signs

.1 Determine the locations of signs with due consideration to vehicular sight lines.

4.3.6 Site Grading

.1 Grade site to a minimum of 2% to drain surface water away from buildings.

.2 Address potential ponding and icing problems associated with downspouts. Provide splash pads under downspouts. Locate downspouts away from building entrances and exits. Consider chain for downspout to prevent damage from freezing and vandalism.

.3 Provide drainage as required to meet City bylaw requirements. Coordinate with adjacent properties.

4.3.7 Roads, Walks and Parking

.1 Follow City of Edmonton Design and Construction Standards for design of roads, walks and parking.

.2 Lay out parking lots and walkways and locate parking fixtures, benches, bike racks, flower beds, etc to facilitate snow clearing and removal and to avoid damage from snow moving equipment. Provide adequate width and turning radii for snow moving equipment. Provide allowances for snow storage on site from snow clearing of walks and pathways and ensure drainage of these areas during melting.

.3 Ensure adequate design of concrete pads and paved approaches for front load recycle and waste bins and waste equipment.

.4 Ensure separation of vehicular traffic from main pedestrian traffic.

.5 Design for snow dumping areas to reduce snow removal requirements.

.6 Provide a pavement structure cross-section for parking and roadways.

.7 For parking lots where heavy trucks or fire lanes are anticipated, design pavement structure based on traffic projections.

4.3.8 Utilities

.1 All utility service providers are to be contacted to obtain the following information:

.1 Existing active and abandoned utilities that may affect or be affected by the construction.

.2 Proposed utilities that may affect or be affected by the construction.
.3 Determination of the responsibility for relocation and notice timeline requirements (as per existing agreements with the City).

.2 Where utilities are to be connected to municipal systems, confirm with City of Edmonton and utility companies the adequacies of their systems to service the site.

.3 Ensure specification instructs the contractor to provide horizontal and vertical GPS location of all utilities.

.4 Early in the design, confirm with City of Edmonton about any restrictions on stormwater discharge to the stormwater drainage system and confirm any impacts that the new development will have on the existing stormwater drainage system or stormwater management facilities. If applicable, provide on-site stormwater storage solutions in cases of limited stormwater drainage system capacity (e.g. storm water retention, bioswales, etc).

.5 Early in the design, confirm that existing level of building and/or site fire flows are adequate. Effort must be made to ensure adequate levels of fire protection.

.6 Contact the utility provider to confirm the municipal water pressure, and fire flow capacity. Determine whether on-site boosting is required for a fire sprinkler system.

.7 On large sites, locate utilities in utility corridors, keeping in mind any potential for future development.

.8 Coordinate provisions for future utilities with the City.

.9 Utilities within integrated sites and park areas with multiple buildings are typically managed and maintained by the City. Assistance from utility companies and cadastral information may not be available. In the absence of information, perform CI/ASCE 38-02 or similar – Level D to Level A collection and depiction of existing subsurface utility data.

.10 Perform a complete review of all utilities when developing a site within an Integrated Site or park area. Necessary upgrades to existing utility distribution or service connections are to be included as part of the new development.

.11 Where possible, provide single service connections to each property or integrated site. Size service connections for anticipated future needs.

4.3.9 Tanks for Petroleum Products

.1 Comply with requirements of the Alberta Fire Code, published by the Alberta Fire Prevention Council.

.2 Comply with the requirements of the Petroleum Tank Management Association of Alberta.

.3 Verify the need for fuel tanks. Consider using day tanks for emergency generators.

.4 When tanks are required, above ground tanks are preferred.

.5 Tanks are to be double-walled complete with leak monitoring of interstitial space between tank walls.

4.4 *Environment*

4.4.1 Hazardous Materials Audit

.1 The City will independently undertake a Hazardous Materials Audit that shall be included in all applicable project reports and design documents.

4.4.2 Building Considerations

.1 All identified hazardous materials that will be disturbed in a renovation/demolition are usually completely removed. Hazardous materials removal/disposal is usually the first component of work in a renovation/demolition.

.2 When selecting materials for a new building or an existing building renovation, asbestos containing materials should be avoided. Typical asbestos products manufactured today are considered non-friable materials (i.e. board and pipe products only).

.3 Mould resistant products are becoming more readily available and shall be preferentially used where applicable.

.4 Wherever possible avoid the potential for harmful chemical off-gassing when selecting materials for a new building or an existing building renovation. Examples include materials or products such as carpeting, glues, paints, particleboard furniture, etc., that may contain formaldehyde or volatile organic compounds. These materials or products should be off-gassed off site, prior to installing them in the building.

.5 Construction dust control and clean-up procedures should be implemented to assure building occupants are not overexposed to dust. Controls would include dust barriers, negative air pressure within the construction area, and sealing mechanical ventilation ductwork. Clean-up procedures would include HEPA vacuuming, wet wiping techniques and ductwork cleaning.

4.5 *Landscape Development*

4.5.1 References

.1 City of Edmonton landscape requirements as per Zoning Bylaw 12800.

.2 City of Edmonton, Design and Construction Standards, Volume 5 – Landscaping, March 2004. This document is available on the City of Edmonton website.

4.5.2 Exterior Landscape Development

.1 Refer to City of Edmonton Design and Construction Standards, Volume 5 – Landscaping.

4.5.3 Planting Near Buildings and Utilities

.1 Refer to City of Edmonton Design and Construction Standards, Volume 5 – Landscaping.

4.5.4 Irrigation Systems

.1 Where geotechnical information indicates the presence of highly plastic clay, avoid locating irrigation outlets close to buildings. Changes in moisture content in this type of clay results in volume changes and movement that can damage floors and foundations.

.2 Provide exterior hose bibs on buildings at every 50 m along building walls.

.3 Where sewage treatment charges are based on water consumption, provide separate meter if cost efficient.

.4 Where practical, contain all irrigation systems and equipment within the property lines of the project.

.5 Provide pipe sleeves for irrigation systems under roadways and sidewalks. Ensure complete coverage of landscape areas. Design irrigation systems to allow for emptying water from distribution pipes.

.6 Incorporate rain sensors in irrigation systems to prevent over watering

.7 Specify low water use systems where appropriate.

.8 Consult with user department before considering irrigation systems for landscape areas other than those adjacent to facilities.

4.5.5 Interior Landscape Development

.1 Provide gravel for drainage in all planting areas and planters.

.2 In atria, ensure access for maintenance requirements.

.3 Provide adequate lighting conditions to meet growing requirements of selected interior plants.

.4 Provide interior hose bibs every 15 m along building walls in atria where landscaping exists.

4.5.6 Environmental and Conservation Considerations

.1 Design to minimize maintenance requirements. Consider irrigation, mowing, trimming, pruning, fertilizing, pesticide application and general clean-up requirements.

.2 Use mulches to reduce maintenance and watering requirements for trees and shrubs.

.3 Minimize the requirement for irrigation through selection and placement of plant material.

.4 Minimize mowed grass areas. Use low maintenance ground cover plantings, including low maintenance grass mixes, where appropriate.

.5 Use plant material to reduce heating and cooling requirements for buildings.

.6 Use plant material to control snow drifting.

4.6 *Building Structure*

4.6.1 Design Loads

.1 The following design loads shall be a minimum. Professional experience and/or the current revision of the Alberta Building Code shall govern:

.1 Multi-service facilities: minimum floor occupancy live load 4.8 kPa or 9 kN concentrated, whichever produces the more critical effect.

.2 General Office Areas: minimum floor occupancy live load 4.8 kPa or 9 kN concentrated, whichever produces the more critical effect.

.3 Records Storage Areas: design live load to be based on type and layout of the proposed

storage system, but not less than 7.2 kPa.

.4 Mechanical Loads: minimum floor live load 3.6 kPa. Discrete loads from equipment shall be obtained from mechanical and electrical consultant where applicable. In mechanical rooms, allow for a minimum of 100 mm thick concrete housekeeping pads. Effects of vibration should be considered.

.5 Roof structures shall be designed with special consideration for plugged roof drains.

.6 New facilities, governed under City Policy C532, will accommodate the potential for future solar panel arrays. Unless directed or proven otherwise, assume a rooftop ballast stabilized system. More detailed, basis of design, information on this system will be provided by the City. Self weight, roof membrane protection, and ballast to resist sliding/uplift will be accounted for and considered a live load (principal load factor of 1.5). If a system is not specified, but future capacity is desired, assume a future load of 0.6kPa. Snow loading and drifting potential will be considered in addition to the previously identified load.

.7 When assessing existing structure to accommodate a new solar panel installation, the snow load, as defined by the most current code, will be applied.

.8 When there is a known plan to change the usage of an area in the future, design for the more stringent of current and future live loads.

.9 Maintenance and Equipment Loads: when the need for heavy equipment due to maintenance and replacement of various components is anticipated, an access path will be designated to accommodate these loads.

.2 Lift equipment commonly used:

.1 Genie Z-30/20N, Z-30/20 RJ, S-40/S-45, Z-34/22 IC

.2 JLG 340AJ, 400S

.3 Skyjack SJIII 3226

4.6.2 Foundations

.1 Have a Geotechnical Engineer review and approve aspects of design and construction that depend on soil or groundwater conditions.

.2 Maintain the integrity of existing structures and service lines adjacent to the Work.

.3 Do not incorporate “tie-back” earth retaining systems as an essential part of the permanent structure.

.4 Screw piles are not acceptable without City approval.

.5 A cost benefit analysis will be completed by the Consultant with the aid of the Geotechnical Engineer of record. If it is determined that the pile load testing is cost recoverable, the City will coordinate and pay for these efforts. Results of the testing will be incorporated prior to tendering of the Project.

4.6.3 Structure

.1 Do not use un-bonded post-tensioned reinforcement as an essential reinforcing element of a structural member.

.2 Design exterior slabs at doorways to avoid interference with outward door swings as a result of upward movement of slab caused by soil and frost heaving. Provide structural stoop where necessary.

.3 Structural Systems for Car Parking: design according to CSA S413M, Parking Structures. Provide protection against corrosion of reinforcing steel, including a positive slope, passive cathodic protection system, surface protection membrane, and drainage system with adequate allowances for construction tolerances and deflections.

.4 Provide protection against corrosion for structural elements that may be subject to spills or leaks of corrosive solutions (e.g. mechanical floors supporting brine tanks and water softeners).

.5 Design expansion joints, including those between existing and new structures, so that an abrupt change in floor elevation is prevented. Wheelchairs and carts must be able to pass over these joints with ease.

.6 Self-levelling or caulked expansion joint sealants are not accepted for use on slab-on-grade or structural slabs. Preformed joints shall be specified.

.7 In major renovations of existing buildings, investigate safety with respect to current seismic loading in areas where this is applicable. Upgrade as deemed appropriate for the specific project. At a minimum, ensure adequate lateral support for all non-structural components.

.8 Provide drain holes to allow the release of water in all HSS sections.

.9 Design shall allow for welding to be limited as much as is practically possible to shop fabrication.

.10 Design structural steel floors to prevent transient footstep induced vibration from exceeding the annoyance threshold. Refer to CISC Handbook of Steel Construction – Appendix G, Guide for Floor Vibrations and the National Building Code of Canada – Commentary A – Serviceability Criteria for Deflection and Vibrations.

.11 When floor slopes are relied upon for drainage of surface water, a minimum slope of 2.0% shall be used when runs are greater than 3.0 m. In no case shall floor slopes be less than 1.5%.

.12 Drainage trenches shall slope a minimum of 2% in all cases.

.13 Expansion/friction anchors will not be accepted in areas exposed to the elements, pools, or elements supporting or fixing vibration generating equipment.

.14 Special consideration will be provided on renovations and new construction where gaseous chlorine or salt chlorination systems are used.

.1 Concrete will be specified to accommodate C1 chloride exposure as defined by A23.1

.2 Crack control of concrete will be held to the higher standards set by water retention structures.

.3 Waterproofing membrane will be installed to protect the concrete tank, gutter, and surrounding deck structure as well as an integral waterproofing admixture.

.4 PVC waterstops will be used.

.15 Bentonite waterstops will only be used upon City's approval.

.16 Below grade, concrete structure penetrations where water infiltration is an issue, sleeves with

integral waterstop flanges will be used.

4.6.4 Coordination with Other Disciplines

.1 Structurally design and detail the fastening, support, and backup systems for exterior walls, brick veneers, cladding, and attachments. Specify galvanizing of steel connections outside the air barrier.

.2 Where possible, avoid thermal bridging. Where this is not possible, incorporate measures to minimize its effect.

.3 In the design of exterior wall back-up systems, limit deflections according to the properties of the cladding or veneer material being used.

.4 For roof slopes, refer to Building Envelope Section Roofs. Take into account the resulting non-uniform loads caused by accumulation of rainwater. Account for a 24 hr rain and the effects of a plugged roof drain.

.5 All guardrails, handrails, fixed ladders, and cages shall meet Alberta Occupational Health and Safety at a minimum.

.6 Fixed ladders and cages shall be detailed in accordance with PIP STF05501, as per Alberta OH&S.

.7 Fall arrest systems shall be coordinated with Building Envelope requirements.

.8 Advise and coordinate with the Prime Consultant, if applicable, of expected movements of the structure, including those due to deflection, shrinkage, settlement, and volume changes in the soil. Provide adequate allowances in all affected elements, including partitions and mechanical systems.

.9 If the expected movements of a grade-supported floor slab cannot justifiably be accommodated or tolerated, use a structural slab. Structural slabs constructed over a degradable void-form shall not be used where a significant amount of buried piping will be provided below the floor. The piping shall be protected within trenching or other means to isolate the piping from soil. If there is a significant amount of piping, a crawl space should be considered.

.10 Specify concrete floor flatness that is consistent with the flooring material to be applied and the architect's aesthetic requirements.

.11 Structural and Mechanical consultants are encouraged, where practical, to coordinate final rebar inspection prior to installation of hydronic heating lines.

.12 Structural and Electrical consultants must coordinate the grounding of metal elements.

.13 Ensure that the structure contains adequate access routes for heavy equipment removal and installation.

.14 IT/Server rooms shall be designed to accommodate worst case loading of fully loaded server rack. Server rack specifications will be provided by the City.

.15 Special fitness use areas, such as olympic lifting, medicine ball use, or any other high impact exercises shall be:

.1 Assessed accordingly to accommodate impact loading, vibration, and noise isolation.

.2 Located on grade supported structure OR on elevated concrete structure. The use of steel or OWSJ is not permitted. The zone of use will be isolated from surrounding structure.

.16 Code minimum for crack control may not meet Architectural requirements and is to be reviewed and designed accordingly.

.17 Coordination with the Prime Consultant and the City will be required to address crack control, aesthetics and serviceability limits, for the following concrete structures:

.1 Water retention tanks

.2 Architecturally finished concrete

.3 Skate parks

4.6.5 Paint

.1 Shop primer: to a minimum standard of Master Painting Institute MPI-23 or MPI-79. City to confirm colour.

.2 Shop prime structural steel to a minimum standard of MPI-23 or MPI-79.

.3 Clean and prepare structural steel exposed to view to a minimum standard of MPI-23 or MPI-79 and SSPC SP1 solvent cleaning and SSPC SP243 Hand tool cleaning.

.4 Remove any requirements for spare paint from project specifications.

.5 Coordinate AESS – Architecturally Exposed Structural Steel with architectural consultant.

.6 Specifications should address the need for a finish coat on glulam members. Recommended glulam finish is Sikkens Cetol 1 (first and second coat) and Sikkens Cetol 23 (third and fourth coat). Factory seal coat/wax restrictions imposed by Sikkens should be noted in the project specifications.

4.7 *Building Envelope*

4.7.1 References

.1 ASHRAE Handbook of Fundamentals, American Society of Heating, Refrigerating and Air-Conditioning Engineers, Inc., latest adopted edition.

.2 Brand, Ronald, Part 2, Architectural Details for Insulated Buildings, Van Nostrand Reinhold, 1990.

.3 CSC TEK-AID BARRIERS – DIGEST, Construction Specifications Canada, Toronto, March 1990. This publication includes a comprehensive listing of other publications (including the above), presents basic design principles and addresses building envelope problems that have concerned designers and building forensic experts.

.4 CSA S478-95, Guideline on Durability of Buildings, 1995.

.5 Hutcheon, N, Handegord, G, Building Science for a Cold Climate, John Wiley & Sons, 1984.

.6 National Energy Code for Buildings. National Research Council Canada, 2014.

.7 Commercial Buildings Building Envelope Thermal Bridging Guide, Version 1.1, BC Hydro, 2016

4.7.2 General

.1 Building envelope assemblies separate spaces requiring differing environmental conditions by controlling the flow of air, water and energy.

.2 The building envelope is to be designed using rain screen principles to minimize the following:

.1 Moisture deteriorating the building envelope due to ingress of exterior bulk moisture and trapping of condensation from relatively humid air introduced into the envelope by air exfiltration.

.2 Detrimental effects on air barrier from exposure to:

.1 UV radiation

.2 extreme temperature fluctuations

.3 moisture

.3 Thermally induced movement of structural elements and any connected air barrier.

.3 Detail the building envelope to ensure that water, snow and ice sheds safely from exterior surfaces and is not trapped in the assembly to cause deterioration or staining.

.4 Materials used in the building envelope assembly should be suitable for the environmental conditions to which each will be exposed, including during the construction period. Materials should provide a service life consistent with accessibility for maintenance of building components and planned building life.

.5 City of Edmonton depending on scope and size of project may engage a Building Envelope Commissioning Authority, the consultants will have to work with them to develop QA/QC check sheets which may be used by the contractor and BECA. BECA will also help in identifying that the design for Building Envelope meets OPR. Some of the design criteria have been elaborated in section below.

4.7.3 High Interior Humidity

.1 Where high humidity space cannot be “buffered” from the building envelope, design building envelope assembly to prevent surface condensation.

4.7.4 Air Barrier

.1 Locate the sealing element (usually a membrane) exterior to the major structural elements.

.2 The air barrier typically consists of a number of materials acting together as a system. Minimize the number of materials used to form this system. Do not consider plastic film or spun-woven fiber film as an air sealing element.

.3 Minimize changes of plane in the air barrier system. Where practicable, avoid changes of plane at air barrier membrane connection to window frames.

.4 Air barrier detail continuity and constructability must be given particular attention at:

.1 Window and door frames

.2 Mechanical and electrical penetrations

.3 Wall/roof connections

.4 Changes in plane

.5 Joints between similar and dissimilar materials.

.5 Provide large scale details, preferably with isometric views, to show how air barrier continuity will be achieved and how differential movements and construction sequences will be accommodated.

4.7.5 Insulation

.1 Design insulation to be secured mechanically and in direct contact with the air barrier system.

.2 Place insulation as to minimize thermal bridging within the wall or roof assembly.

4.7.6 Roofs

.1 General

.1 Design to accommodate built-up, elastomeric or modified bitumen roofing membranes.

.2 Prepare roof plans showing elevations for slopes to drain. Indicate locations of drains, roof mounted equipment and roof penetrations. Reference roofing detail drawings to the roof plan.

.3 All new roofing and re-roofing drawing details and specifications should meet or exceed the guidelines within the latest edition of the ARCA Roofing Application Standards Manual.

.4 Provide membrane below all metal roofing and flashings. Consider metal roofing and flashings to be water shedding only, not waterproofing.

.5 Provide main access to rooftop from inside building. Provide full stairs to roof access where possible, however, fixed ships ladders are an acceptable alternative in locations where the ABC does not require stairs. Where practicable, connect additional separate roof levels with external wall-mounted ladders, designed to meet or exceed safety regulations. Where external access between roof levels is not possible, provide access from inside building.

.6 Where practicable, do not locate rooftop access hatches adjacent to mechanical rooftop units, exterior parapets, clerestory walls, or any areas where it is anticipated that snow will accumulate (as per the structural engineering snow loading diagrams). Ensure hatches are located to allow adequate room to access and egress.

.7 Ensure all rooftop penetrations, such as HVAC,electrical, and drains, are aligned so they do not restrict the roof from draining.

.8 Where equipment or openings occur on sloped roofs, provide crickets to keep drainage paths away from the equipment or openings.

.9 Where practicable, do not locate rooftop equipment so that service areas are adjacent to parapets or other changes in roof level.

.10 Systems and equipment placement will be in locations where engineered fall arrest/travel restraint are not necessary. Approval from the City to bypass this restriction is necessary. Should approval be provided, options will be limited to guardrails.

.2 Near-Flat Roofs

.1 Slope roof surfaces to drains, including valleys and transverse slopes across top of parapets. Provide minimum slope to drain of 1:50 for field of roof.

.2 The above requirements for roof slopes may not be practicable for existing buildings, e.g., where existing flashing heights limit maximum thickness of sloped insulation. In such cases consider adding drains to reduce maximum insulation heights. Where adding drains is not practicable they may be omitted. It is acknowledged that this may result in reduced roof slopes and ponding.

.3 Provide overflow scuppers where only one roof drain is provided for a contained drainage area and where structural hazard would result from blocked drainage. Do not locate scuppers at roof expansion joints.

.4 Use scuppers only as overflow devices, typically located 25 to 50 mm above membrane at roof perimeters. Do not use scuppers to replace roof drains. Minimum size of scupper to be determined by a rational analysis of expected maximum one day rainfall.

.5 Where practicable, form roof drainage slopes with the structure, not with insulation.

.6 Backslopes may be formed using sloped insulation, provided a continuous vapour retarder membrane is applied below and above the backslope insulation, and these membranes are joined at both low and high points of backslopes.

.7 Where practicable, maintain a constant elevation along the perimeter of contained roof areas. If a varying perimeter elevation cannot be avoided, provide dimensioned details indicating low and high perimeter conditions.

.8 Provide curbs at all roof penetrations other than drains. Detail top of curbs at minimum 200 mm above the adjacent roof membrane. Provide minimum 1.0 m clearance around curbs to facilitate roofing application and drainage.

.9 Where a roof joins a wall extending above the roof, locate wall cladding, window sills, door thresholds, louvers and other wall penetrations a minimum of 300 mm above the roofing assembly.

.10 Design transitions from roofs to walls projecting above roofs as protected membrane transitions.

.11 Normally use gravel ballast with filter fabric for protected membrane systems. Provide removable precast paver units around roof perimeters, around curbs (greater than 3 m any side) and for access paths and plaza decks.

.12 When the exposed surface of a roof assembly, e.g. plaza type decks, is required to be cast-in-place concrete, provide the following:

.1 Drains at both deck and membrane levels, designed to allow for differential movement between those levels.

.2 Venting of insulation layer and concrete above roof membrane.

.3 Geotechnical type filter fabric between concrete and insulation below, to prevent concrete penetrating into insulation layer.

.3 Steep Roofs

.1 Design steep roofs (slopes greater than 1:6) with the plane of waterproofing membrane/air barrier following the plane of ventilated cladding.

.2 Configure steep roofs and perimeters so that snow, ice and rainwater will not create safety, maintenance or appearance problems. Design to prevent ice and snow from sliding onto areas intended for use by vehicles or pedestrians.

.3 Size eaves troughs to accommodate water from contributory roof and wall areas and to resist expected snow and ice loads. Off-the-shelf eaves troughs typically do not provide adequate resistance to dynamic loads from ice and snow. Eaves troughs to be a minimum of 125 mm wide.

.4 Locate rainwater leaders and direct discharge at grade so that water does not flow onto walks or paved areas where it could freeze, or onto areas where it could cause erosion damage.

.5 Locate eaves troughs so they are accessible for maintenance and will not cause leakage into the building.

.6 Observe the following minimum slopes for applications of shingles and shakes:

.1 1:3 for normal triple tab strip shingle application.

.2 1:2.4 for cedar shingles.

.3 1:2 for cedar shakes.

4.7.7 Re-Roofing

.1 On structurally sloped roofs the re-roofing design may consider leaving existing primary insulation and cover panels in place if they are found to be in a dry condition. The existing vapour barrier which should be equivalent to two plies of built up roofing must be tied into adjacent wall air seals or vapour barriers. The metal decks are to be protected with a code approved levelling surface.

.2 New parapet construction should be built with a minimum of 38 mm x 140 mm wood framing with the wall cap sloped towards the roof.

.3 Under normal building humidity and operation, permanent wood foundation (PWF) lumber should be specified for ARCA sleepers supporting mechanical roof top equipment.

.4 Roof curbs for hot pipes, as in standby engine exhaust or other hot roof penetrations, should have metal curbs and additional clearances to combustible construction.

.5 Re-roofing should include slopes of 1:50 unless there are restrictions of wall details or limitations of raising parapets to accommodate the new sloped insulation.

.6 The sloped insulation should have a minimum depth of 50 mm at the roof drains.

.7 Maximum thickness of sloped insulation should be approximately 150 mm. The limitation of sloped roofing primary insulation maximum thickness may require additional roof drains.

.8 Review actual depths of ponding water on roof, generally over 50 mm, and locations of roof deck depressions prior to designing a new sloped insulation roofing system.

.9 Provide a minimum of two 100 mm roof drains per roof zone. Exceptions could include small canopy roofs with low parapets. Provide overflow scuppers where plugged roof drains could create ponding water depths over 150 mm. The overflow scuppers should be approximately 25 mm to 50 mm above the roofing membrane and not located over entrances or other locations that could become a hazard during overflow conditions. Size of opening to be determined by a rational analysis of expected maximum one day rainfall. Minimum opening size 150 mm x 300 mm.

.10 All re-roofing drawing details and specifications should meet or exceed the guidelines within the latest edition of the ARCA Roofing Application Standards Manual.

.11 Cut tests should be done on all roof zones prior to preparation of re-roofing specifications and drawing details.

.12 Determine if the roof to wall tie-ins have an adequate air seal. If the existing wall air seal membrane is weak or nonexistent, provide the roof to wall connection membrane stripping that could be tied into if the wall is re-cladded at a later date.

.13 Provide a protected roofing membrane detail to include exterior insulation and metal flashing at the base of all walls.

.14 Generally the re-roofing membrane would consist of two ply SBS modified bituminous membrane (MBM). Where there is a potential fire hazard with the original building construction or building occupancy creates an unacceptable fire risk, a four ply asphalt and gravel re-roofing system should be specified.

.15 Review controlled flow roof drainage system with a Mechanical Engineer to investigate alternate water drainage options. Review size of overflow scuppers to prevent overloading the building structure.

.16 Generally provide for new four bolt clamping ring cast iron roof drain, conventional roof drain complete with sump receiver, aluminum dome, and underdeck clamping rings. Sleeved re-roof drains with u-flow connectors are not to be used. Check if existing roof drain piping or underside of the existing roof drain is covered with insulation containing asbestos. Coordinate with the City to test if the insulation contains asbestos.

.17 If the existing rainwater leaders direct water to grade through an exterior wall, check that there are no freezing problems associated with the existing construction. Correct construction as required.

.18 Remove and reinstall all mechanical roof top equipment to accommodate re-roofing. Raise curbs, ductwork, mechanical piping and electrical services to accommodate sloped insulation.

.19 Reinstall mechanical roof top units and pipe supports on precast pavers set on 25 mm type-4 extruded polystyrene insulation. Install a loose laid 250 granular cap sheet under the new mechanical supports.

.20 Install 250 granular MBM cap sheet in a contrasting colour for walkways around mechanical roof top units and in direct lines to stairwell or roof hatches. Leave 25 mm gaps in the MBM cap sheet walkway every meter to not impede drainage to the roof drains.

.21 Eliminate pitch pans by installing curbed roof openings with metal enclosures that have removable tops to add or delete mechanical equipment.

.22 Provide a minimum of 610 mm clearance between mechanical curbs.

.23 Add mechanical instructions for removal and replacement of roof top units.

.24 Add mechanical plumbing instructions for adding and removing roof drains and associated piping.

.25 Generally specify removal of all redundant rainwater leader piping and hangers if any roof drains are abandoned during the re-roof.

.26 Remove curbs and repair penetrations from demolished equipment.

4.7.8 Walls

.1 Design exterior wall assemblies as rain screens consisting of:

.1 Exterior cladding

.2 Air space

.3 Thermal insulation

.4 Air barrier system

.2 Size wall cavities to provide minimum 25 mm clearance between maximum thickness of insulation allowed in the specifications and exterior cladding (this would typically be at least 100 mm). Provide additional clearance as required to suit construction tolerances, e.g. for concrete structures and high-rise buildings.

.3 Provide openings in the cladding to permit drainage and pressure equalization of the air space.

.4 Compartmentalize air spaces in the wall cavity to restrict air flow around corners and not more than 4 m in any direction within the cavity generally. Detail and show the location of control joints and compartmentalization baffles in cladding.

4.7.9 Windows, Doors and Glass

.1 Specify window performance to prevent condensation from forming on window frames or glass at design criteria specified in Section Mechanical. The specification is based on the use of an exterior glazed small box curtain wall section.

.2 The design of the curtain wall would have mechanically keyed gaskets in the box section and pressure plate. Anchors for the framing would be located within the vertical tube sections or as strap anchors so they DO NOT INTERFERE with adhesion of the membrane from the wall directly to the tube face of the aluminum frame. Mechanically retain the membrane with the anti-rotation channel.

.3 Do not project the main mass of window frames beyond the exterior plane of the air barrier. Bridge the cavity of the wall by means of flashing (not the frame or cover cap). DO NOT CAULK cover caps to flashings.

.4 Design windows, window treatment and interior surrounds to allow uniform, unobstructed movement of heated room air across glass and frame.

.5 Provide vestibules at building entrances, intended for public access, to avoid the possibility of interior humidity causing frost build-up on doors and frames.

.6 Coordinate the selection of glazing with lighting and mechanical systems to avoid glare and solar overheating.

4.7.10 Skylights and Sloped Glazing

.1 When light is to be introduced through the roof, vertical clerestory glazing is preferred over skylights and sloped glazing. Such designs allow for better control of overheating, condensation control and solar glare.

.2 Clerestory window, sloped glazing, and skylight locations shall take into consideration the structural engineering snow loading diagrams for the roof to avoid sills and glazing being within the “snow shadow” indicated on these diagrams. At a minimum, all sills shall be 300mm above the top of the finished surface of the roofing system below.

.3 Skylights and sloped glazing systems frequently become building envelope problems, triggering significant operation and maintenance costs to building owners. Consult City of Edmonton if either system is to be incorporated into a design.

.4 If, after considering the risks and alternatives, designers still opt for skylights or sloped glazing and clients accept the risks associated with them, the following design notes are offered to help minimize adverse consequences:

.1 Slope glazing minimum 30 degrees from horizontal.

.2 Design air seal connections to skylight and sloped glazing curbs and adjacent walls to be fully accessible and not dependent on construction sequence.

.3 Design skylights and sloped glazing so that they are accessible for maintenance and cleaning from building interior and exterior.

.4 Make provision to drain water entering the glazing rabbet of the system back to the exterior, during all seasons. Water may enter the glazing system from the exterior. The skylight system should be designed to contain water in the glazing rabbet and drain it in an overlapped shingled fashion. Water should **not** contact caulked joints or seals.

.5 Provide an interior condensation gutter system. In high humidity buildings it may be necessary to drain the collected condensation at the sill to the mechanical system rather than relying on evaporation. This requirement should be addressed at the initial design stage.

.6 Use mechanically keyed in dry glazing seals for the interior and exterior of the system. Do not depend on sealants.

.7 Glazing should be **minimum** heat strengthened exterior lite, 12 mm airspace, 0.060 PVB laminated interior lite.

4.7.11 Concealed Spaces

.1 Avoid sealed cavities and “dead space” in and adjacent to building envelope. Unheated cavities created by minor architectural features are to be vented to the exterior.

.2 Provide access to heated concealed spaces, e.g. heated overhangs, from the building interior.

.3 Provide access to concealed spaces ventilated to the exterior, e.g. unheated soffits with recessed lights, from the building exterior.

4.8 *Building Acoustics*

4.8.1 References

.1 Meet or exceed the guidelines and standards of the following, as applicable:

.1 ASHRAE: 1999 *Applications Handbook*, Chapter 49: Sound and Vibration Control.

.2 CMHC: *New Housing and Airport Noise*.

.3 CISC: *Handbook of Steel Construction* – Appendix G, Guide for Floor Vibrations.

4.8.2 General

.1 The intent of these requirements is to ensure that the acoustic environment of the building is compatible with the general needs and comfort of the building occupants, and the surrounding residential areas.

4.8.3 Definitions

.1 The following are definitions of common parameters used to describe the acoustic characteristics of building environments, materials and assemblies:

.1 Sound Transmission Class (STC): a single number rating of the sound transmission loss properties of a wall, floor, window or door. A good reference for wall and floor STC ratings is the Alberta Building Code.

.2 Ceiling Attenuation Class (CAC): this is a single number rating of the sound transmission properties of a suspended ceiling system between two rooms having a common plenum.

.3 Noise Reduction Coefficient (NRC): a single number rating of the sound absorptive properties of a material ranging from 0.01 (negligible absorption) to approximately 1.00 (very high absorption). Manufacturers of ceiling boards, wall panels and various sound absorptive finishes will usually list the NRC rating in their product information.

.4 Articulation Class (AC): a ceiling performance rating specifically used for open plan offices. Articulation Class is a single number rating describing a ceiling boards' ability to attenuate speech sounds between workstations.

.5 Noise Criteria (NC): a somewhat dated method of rating HVAC system noise. NC is still often used as a design criterion because many manufacturers of mechanical equipment continue to use it.

.6 Room Criterion (RC): a more recent rating for HVAC system noise. RC is the referred rating for setting design goals and for qualifying field installations.

4.8.4 Acoustically Critical Spaces

.1 Consult with City of Edmonton Engineering Services on:

.1 Rooms where speech privacy, sound isolations, background noise or reverberation control is critical. In most cases, more than one of these acoustic conditions will need to be considered for interview and therapy rooms, teleconference rooms, courtrooms, auditoria and lecture halls.

.2 Unusual situations where adjacent occupancies may not be acoustically compatible and

special construction is required.

.3 Large open-plan office projects. There are numerous acoustical requirements associated with this type of space layout.

4.8.5 Acoustic Considerations: Architectural

.1 General

.1 Develop the floor plan so that noise sensitive spaces are not next to high noise areas (e.g. conference rooms adjacent to mechanical rooms). Consider both the horizontal and vertical layouts.

.2 Floor Construction

.1 Evaluate the need for a floating concrete floor to isolate very loud equipment (e.g. chillers; large open-ended fan units) in mechanical areas. A floating floor is rarely necessary except when rooms with low noise criteria (e.g. auditoria and studios) are located directly below such mechanical areas. It is recommended that an acoustic consultant make a preliminary estimate of the mechanical noise and, if required, develop the details for this type of floor.

.2 Evaluate the construction of floors for impact noise. Footstep noise and other impact sounds can be a source of annoyance, particularly through lightweight and uncarpeted floors. Design for impact sound isolation is especially important where areas of high impact (e.g. corridors, fitness centres and fitness studios, indoor play and child-minding areas) are located above or directly adjacent to occupied rooms with less activity. Consult with City of Edmonton Engineering Services on floor details for reducing impact sound.

.3 Interior Partitions

.1 Design interior partitions for sound isolation as follows:

Space Description	STC Rating (min)
Moderate Privacy Requirements - General Office Space, Small Meeting Rooms	40
Confidential Privacy Requirements Executive Offices - Large Conference Rooms, Training Rooms, Disciplinary Rooms, Interview Rooms	45
Acoustically Critical Spaces (see Section 4.9.4) - Studios, Auditoria, Lecture Halls	50+ (varies)

.2 Partitions with STC 45 rating should generally be full height or incorporate a gypsum board plenum barrier.

.3 Use full-height wall construction or drywall ceilings in rooms that require STC 50 or greater.

.4 Prepare large scale details that show continuous, airtight seals at building component junctions such as:

.1 Partition to perimeter heater cabinet,

.2 Partition to suspended ceiling,

.3 Partition to window mullion at exterior walls.

.5 Provide a complete, airtight sound seal around piping, duct and conduit that penetrate partitions and floors. Sealants must comply with fire separation and waterproofing requirements, as applicable.

.6 Provide a solid airtight barrier behind perimeter heater cabinets to prevent sound transfer at common partitions.

.7 Do not use operable partitions between areas that require a high degree of speech privacy. Where operable partitions are deemed necessary for general noise isolation, specify a partition that has a minimum STC 50 rating. Detail such partitions according to ASTM E557, Standard Recommended Practice for Architectural Application and Installation of Operable Partitions.

.8 Use massive wall construction (e.g. concrete block, poured concrete, multi-layer drywall) to separate occupied spaces from duct shafts and mechanical rooms.

.4 Interior Finishes

.1 Specify ceiling boards that have a minimum CAC rating of 35 for closed office areas or other rooms that require speech privacy. Generally, these boards will be mineral-fibre type.

.2 Provide a sound absorptive ceiling finish in all general office space, corridors, cafeterias, lobbies and large public areas. Ceiling boards or other ceiling finishes should have a minimum NRC of 0.60.

.3 Consider additional sound absorbing wall finishes for recreation facilities and other rooms where a high degree of noise is expected.

.4 Provide carpet to all occupied floor areas above offices and other noise sensitive areas to minimize impact noise of footsteps.

.5 Open Plan Offices

.1 Consider the following where optimum open-plan conditions are desirable (e.g. Call Centres).

.2 Specify ceiling boards that have a minimum AC rating of 170 where most systems furniture is approximately 1.5 m high.

.3 Specify ceiling boards that have a minimum AC 200 where most systems furniture is approximately 1.8 m. This is required where maximum privacy between workstations is desirable.

.4 Specify foil backing for all glass-fibre ceiling boards.

.5 For a mix of open-plan areas and enclosed offices, different ceiling boards may be required for each type of space. However, manufacturers offer boards with identical finishes for both applications.

.6 Consider maintenance requirements in the selection of ceiling boards and other sound absorptive finishes. Avoid cloth-faced glass fibre ceiling boards, soft spray-applied materials and other finishes that are difficult to clean.

.7 Specify electronic sound masking where indicated in the program requirements.

4.8.6 Acoustic Considerations: Mechanical

.1 Background Noise

.1 Design mechanical systems to provide background noise levels, as follows (as per ASHRAE Applications Handbook):

Space Description	Room Criterion (RC)
Radio/Recording Studio, Auditorium	20 maximum
Audio/Visual Room, Courtroom, Teleconference Room	25 maximum
Large Conference Room, Observation/Therapy Room, Classroom, Lecture Hall	25 – 30 maximum
Enclosed Office, Meeting Room	30 - 35
Open Plan Areas, Library, Cafeteria, Reception/Waiting Areas	35 - 40
Computer Room, Kitchen	45 maximum
Light Maintenance Shop	50 maximum

.2 In most office settings, a neutral, unobtrusive background noise helps to increase speech privacy. Therefore, over-silencing is undesirable.

.3 Consult with City of Edmonton Engineering Services on spaces that require a noise level of RC 25 or less.

.2 Ducts, Terminal Devices, Heat Components and Silencers

.1 Whenever possible, design the system layout so that any medium velocity ducts and terminal boxes are above service space such as corridors.

.2 Do not locate exhaust fans directly above meeting rooms and conference rooms serving such spaces. Locate these fans in the ceiling plenum above a less critical area (e.g. Waiting/Reception or Corridor) and provide acoustically-lined duct on the fan intake.

.3 Avoid placing rooftop equipment over noise-sensitive areas. Provide details describing acoustic treatment, duct configuration and roof penetration seals for any rooftop installations.

.4 Design main air distribution systems to minimize the use of acoustic duct lining, whenever possible.

.5 Select acoustic silencers with the lowest static pressure loss, when a selection of two or more silencers exists.

.6 Use flexible connections between fans, plenums and all related ductwork.

.7 Provide smooth air flow conditions near fan units to minimize air turbulence. Large, rectangular ductwork with medium and high air velocities can create low frequency duct rumble. Spiral-wound, round duct is preferred for air velocities over 9 m/s or where excessive turbulence is anticipated.

.8 Use non-continuous perimeter heat cabinets that allow acoustic barriers to be installed behind the cabinet at all window mullion locations. Provide easy access at these locations.

.9 Select terminal boxes on basis of both in duct and radiated noise level. Manufacturer's VAV box noise data often assumes the equipment is located above a mineral fibre ceiling and that there is use of acoustically-lined duct. Ensure that the design includes the effect of these elements.

.10 Select diffusers/air outlets so that the combined noise from all diffusers in a room meets the design criterion. Noise from a single diffuser will typically need to be specified 6 – 10 dB lower than RC(N) goal when several diffusers are in the same room.

.11 Located balancing damper at least 2 m away from diffuser.

.12 Provide at least 600 mm of straight duct at diffuser inlet.

.13 Use Z shape return air transfer ducts (sound traps) for offices where privacy is identified as a concern.

.3 Plumbing Noise

.1 Use a resilient sleeve around supply pipes with oversize clamps fastened to structure, in areas where water flow noise may be a disturbance. Sleeves comprised of 254 mm (12") thick closed-cell elastomeric pipe insulation or proprietary resilient pipe fasteners are acceptable. Do not use hard plastic sleeves.

.2 Ensure that pipes penetrating through drywall partitions are not rigidly connected. Provide a sleeve at the wall opening, leaving an air space around the pipe, and seal with a resilient caulking.

.3 Where double plumbing walls are used (e.g. washrooms); attach supply piping only to the fixture side of the wall structure.

.4 Consider the use of pressure reducing valves (PRV's) in the system to minimize plumbing noise for noise sensitive areas. Size PRV's to limit the pressure at fixtures to 375 kPa.

.5 Install water hammer arrester adjacent to any quick-acting solenoid valves.

.4 Vibration Isolation

.1 Use the current ASHRAE Applications Handbook, as a guide for selecting vibration isolation of mechanical equipment.

.2 Provide vibration isolators for all vibrating pipes and ducts in mechanical chases and walls common to noise sensitive areas.

.3 Use flexible connectors on pumps that require vibration isolation from piping. Twin sphere neoprene rubber flex connectors are preferred.

.4 For rooftop equipment, vibration problems can usually be avoided if the static deflection of each spring isolator is at least 15 times the structural deflection of the roof due to the equipment loading. Typically, this requires springs with a static deflection of 50 – 100 mm.

.5 Community Noise

.1 Determine the community noise impact of large outdoor mechanical equipment, e.g. cooling towers, chillers, and large fan units with louvers to outside. Occupants of residences within

1000 m of such equipment can be annoyed by mechanical noise, particularly at night.

.2 Silence or strategically locate outdoor mechanical equipment and intake/exhaust openings to meet local municipal noise by-law requirements. These levels are determined at the residential property line nearest to the equipment.

4.8.7 Acoustic Considerations: Electrical

.1 Transformers

.1 Avoid locating transformers within ceiling spaces above noise sensitive spaces.

.2 Provide vibration isolators for transformers near occupied spaces. Use the following table as a guide for selecting vibration isolators.

	Near Non Critical Areas		**Near Critical Areas**	
Size (kVA)	Isolator Type	Static Deflection	Isolator Type	Static Deflection
Under 50	Neoprene pad	3 mm	Neoprene isolator	10 mm
50 – 250	Neoprene isolator	10 mm	Spring isolator or hanger	19 mm
Over 250	Spring isolator or hanger	19 mm	Spring isolator or hanger	25 mm

.3 Provide flexible conduit to make the final connection to the transformer.

4.9 *Doors and Hardware*

4.9.1 Coordination with Security

.1 Coordinate door hardware with security equipment (eg. Card readers, door strikes, switches, etc) to ensure proper operation.

.2 Reference Appendix C “Security and Card Access System Design Guidelines”

4.9.2 Lockset and Keying Standards

.1 When specifying the locksets (locks and cores) and keying in a new or renovated facility, ensure the specific manufacturer and model number is indicated. All City departments have a lockset standard that must be adhered to. These standards differ between departments within the City.

.2 Request the lockset and keying standard specific to the client department from the Project Manager prior to preparing the door hardware schedule.

.3 In specification, include requirement for Contractor to hand over locksets for keying with appropriate time prior to occupation.

4.9.3 Door Installation Tolerances

.1 Between Steel Doors & Frame: 3 mm +/- 1.5 mm hinge, top, and latch side

.2 Between Wood Doors & Frame: 3 mm +/- 1.5 mm hinge, top, and latch side

.3 Between Aluminum Doors & Frame: 3 mm +/- 1.5 mm hinge, top, and latch side

.4 Between any door and the finished floor: 13 mm – 25 mm, depending on threshold

requirements, return air requirements, and acoustic concerns.

4.9.4 Door Naming Convention Standards

.1 When developing door schedules, ensure that the door tags used are a maximum of 7 digits. (The floor plans are used to label doors, and the CCURE system is restricted to 7 digits.)

4.9.5 Door Hardware

.1 Door hardware shall be specified as per table below. Requested alternates may be considered during design however shall be reviewed and approved in writing by City of Edmonton.

HEAVY DUTY CLOSER	LCN 4000 series	Sargent 351 series	Norton 7500 series
MED DUTY CLOSER	LCN 1000 series	Sargent 1331 Series	Corbin Russwin DC8000 series
TRACK ARM DOOR CLOSER	LCN T-series (track)	Sargent 422 Series	Corbin Russwin DC5000 Series
CENTRE HUNG DOOR CLOSER	RIXSON 345	IVES	Norton series
CONCEALED DOOR CLOSER	LCN 2030/3130/5030 series	Sargent 268 Series	Norton series
DOOR CHECK	GLYNN JOHNSON 400 series	Sargent 590/690/1540/1530	Hagar 6000/7000
HINGES	IVES 3/5KN CB/BB	McKinney 3/5KN CB/BB	Stanley 3/5KN CB/BB
ELECTRIFIED HINGE	Hagar	Mckinney	Stanley
KNOBSET	Schlage D Series (*SFIC)	Sargent 8 Line Series (*SFIC)	Best 83K (*SFIC)
LEVERSET	Schlage ND Series (*SFIC)	Sargent 10 Line Series (*SFIC)	Best 93K (*SFIC)
ELECTRIFIED LEVERSET	Schlage Elec (*SFIC)	Sargent 10 Line 70/71 (*SFIC)	Best 93K-DEU(*SFIC)
MORTISE	Schlage L-Series	Sargent	Corbin Russwin
ELECTRIFIED MORTISE	Schlage L9000 Series	Sargent 8200 Series	Best 40 Series-DEU
ELECTRIC STRIKE	VON DUPRIN	RCI/EFF	HES
CODE ENTRY	Kaba	Unican 1000/L1000	Schlage CO/AD

	E-PLEX/Powerplex 2000	w/Key O/R	
PANIC	Von Duprin 98/99 Series	Sargent 8000 /9000 series	ED5000
FIRE EXIT	Von Duprin 98-F/99-F Series	Sargent 8000-F series	ED5000 Rated
FLUSH BOLTS	Ives	Rockwood	Canaropa
WEATHERSTRIPPING	Zero International	KNC Crowder	Reese

4.10 *Mechanical*

4.10.1 References

.1 Meet or exceed the following guidelines and standards:

.1 Canadian Standards Association (CSA) Standards

.2 Alberta Building Code

.3 Alberta Fire Code

.4 National Plumbing Code of Canada

.5 National Energy Code of Canada for Buildings

.6 ASHRAE Handbooks

.7 ASHRAE Standards

.8 SMACNA Standards

.9 *Industrial Ventilation: A Manual of Recommended Practice,* American Conference of Governmental Industrial Hygienists

.10 *Alberta Ventilation Regulation Pursuant to the Occupational Health & Safety Act*

.11 *Management Strategy for the Phasing Out of CFC's and Halons, at Alberta Infrastructure Facilities*

.12 *Fumehood Code of Practice,* Alberta Government

.13 *EMCS Standard for Logical Point Mnemonics,* Alberta Infrastructure

4.10.2 General

.1 Drawings

.1 Prepare project drawings with schematic diagrams indicating the following:

.1 Mechanical systems, major equipment, components, and BAS control points.

.2 Equipment, components, piping and ductwork, arranged to accurately reflect the

physical (on-site) configuration including equipment connections, valves and dampers.

.3 Devices that measure air and water flow, temperature, and pressure.

.4 Mechanical schematic shall indicate design parameters for inlet and outlet temperature, pressure, and flow rates where feasible.

.5 Mechanical plumbing and HVAC shall be provided on separate drawings, except as agreed to by the City of Edmonton Engineering Services in advance.

.6 Mechanical room drawings:

.1 Mechanical room drawings shall show the items specified below in the Design Development phase.

.2 Mechanical room plans shall have minimum scale 1:50, with equipment, piping, ductwork, and service access clearances. Provide lower level and upper level plans with minimum of two (2) section views to clearly indicate mechanical room details. Provide additional plan and section views to clearly illustrate equipment heights, pipe and duct heights and clearances, vertical clearances, etc.

.3 Where mechanical room drawings are modelled in three dimensions. isometric views shall be shown on drawings.

.7 Identify BAS control points according to the Alberta Infrastructure EMCS Standard for Logical Point Mnemonics.

.8 Position flow measuring devices according to the manufacturer's recommended locations and dimension the required straight length entering and leaving each device.

.9 At the Design Development phase, coordinate and show all main ducts, main pipes, drains, sprinkler risers and mains, and all main equipment.

.10 Schedules shall be located on drawings and not in the specifications.

.2 Accessibility

.1 Provide sufficient access space for servicing, maintaining and removal of equipment and components or portions thereof (i.e. tube bundles, filter media, large motors). Service access requirements shall be shown on drawings.

.2 Mechanical room pumps shall be arranged such that all pumps have minimum 600 mm clear service clearance to one side of the pump. Duplex pump configurations shall be located as a pair with 600 mm service clearance on both sides.

.3 Reduced pressure backflow preventers shall be installed less than 1500 mm above finished floor.

.4 Heating and chilled water systems shall have chemical treatment equipment located such that service can be accomplished without reaching over piping and / or equipment. Chemical pot feeders shall be located less than 1000 mm above finished floor. Filter housings shall be located less than 1500 mm above finished floor.

.5 Provide minimum 300 mm clearance between underside of rooftop equipment and roof surfaces continued underneath.

.6 Indicate on the drawings, access space provided.

.7 In general, except for heating and sanitary systems, mechanical systems should not be located in slab or below slab-on-grade.

.3 Energy

.1 Design shall achieve energy efficiencies as specified in the City of Edmonton Policy C532. Where C532 does not apply the National Energy Code for Buildings (2011) will apply.

.2 Develop energy conservations and heat recovery options and discuss with Facility Maintenance Services (FMS) for evaluation and approval. Consider energy conservation and cost avoidance options that are supported by economic cost analysis. Follow the methodology for lifecycle analysis outlined in the Pre-Design section of Volume 1. Options that should be considered are:

.1 Free cooling

.2 Heat recovery and reclaim

.3 Reduced fan and pumping systems when maximum flow is not required

.4 Reduced outside air volumes and ventilation rates during unoccupied hours

.5 Shut down fans and DHWR pumps during unoccupied hours

.6 Specify high efficiency electric motors

.4 Existing Buildings

.1 For projects where an existing building is being renovated or being added to; the basis of design for the new mechanical system is to match or exceed the existing base building system in terms of occupant comfort and energy performance.

.5 Winterization

.1 Incorporate winterization requirements into design:

.1 Clearly identify on design drawings

.2 Include section in O&M manuals

.3 Ensure systems are commissioned and identified to maintenance staff

.6 Pipe Penetrations

.1 Consult with the City of Edmonton Facility Engineering for building envelope penetrations by hot pipes such as emergency generator exhaust pipes and incinerator chimneys.

.7 Notable References

.1 Refer to the section “Acoustic Considerations: Mechanical” for acoustic requirements related to mechanical systems and components.

.2 Refer to the section “Landscape Development” for exterior and interior hose bib requirements related to landscaping.

.3 Refer to the section “Appendix A - Colour-Coding Requirements for Mechanical and Electrical Systems” for identification symbols and colours for mechanical piping and equipment.

.4 Refer to the Electrical portion of the consultant manual “Motor Control” for guidance on motors, voltages, system redundancy, and the use and application of Drives/VFDs.

4.10.3 Design Criteria

.1 General

.1 Design mechanical systems according to the Alberta Building Code (current edition).

.2 Design conditions shall be January 1% and July 2.5% as per the Alberta Building Code.

.3 A safety factor of 10% shall be applied to heating and cooling load calculations.

.1 Do not allow a 10% safety factor for cooling load when sizing central cooling plant equipment.

.4 Setpoints:

.1 Heating space temperature setpoint shall be 23 °C.

.2 Cooling space temperature setpoint shall be 22 °C.

.3 Heating space relative humidity setpoint shall be 20% when the outdoor temperature is lower than 0 °C and 30% when the outdoor temperature is higher than 0 °C.

.4 Enclosed Parking Structures shall be designed with the ability to heat spaces to 18°C.

.5 In zones with roof heat loss, provide radiation elements and temperature sensor to maintain minimum 18°C within ceiling space.

4.10.4 Plumbing

.1 General

.1 Heat domestic hot water with heaters or boilers independent of the building heating system.

.2 Domestic water heating shall be achieved by a dedicated domestic water heater or boiler and storage tank. Instantaneous domestic water heaters shall only be used where the application requires it. Specify a water softener for all instantaneous domestic hot water installations.

.3 Domestic Hot Water recirculation piping shall connect as close as practical to washroom lavatories.

.1 Consideration shall be given to volume of water dispensed by lavatory per cycle.

.4 PEX piping shall be considered for domestic hot water recirculation applications only.

.5 Domestic water recirculation systems shall be designed to maintain a water velocity below 0.6 m/s.

.6 Domestic hot water recirculation piping shall include a balancing valve to limit the flow to the value prescribed in sentence 5.

.7 Grey water systems will not be accepted.

.8 Specify ball valves for isolation service up to 100 mm. Gate valves 100 mm and smaller will not be accepted.

.9 Cleanouts shall be specified as 50 mm or larger. Clean-outs for urinals shall be located

above the rim flood level.

.10 For any facility with more than 4 shower heads, a feedforward digital mixing valve shall be specified. This applies to large recreation centres. The valve is to be installed in a gender neutral, accessible area.

.11 Pipe insulation jacketing shall be PVC.

.12 Pumps shall only be installed at floor level. No pumps shall be installed at elevation.

.2 Plumbing Fixtures

.1 Flush valves shall be exposed, automatic infrared sensor type, unless specifically discussed on a project by project basis.

.2 If technology is not in place for flush valves and faucets to be self-powering, the fixtures are to be hardwired as opposed to battery operated.

.3 Waterless urinals will not be accepted.

.4 The COE has preferred plumbing fixtures. Specification of these models is not a strict requirement, but encouraged so the COE can better manage spare parts and the maintenance of plumbing fixtures.

.1 Lavatory

.1 Faucet – Self generating turbine-powered, battery operated, 0.5 GPM automatic infrared sensor activated faucet.

.1 Toto model TEL105

.2 Basin – Self rimming vanity basin with faucet ledge.

.1 American Standard Cadet 9494

.2 Franke V1821

.2 Flush Valve Type Water Closet

.1 Flush Valve – Self generating turbine-powered, battery operated, automatic, infrared sensor activated, piston operated, 1.28 GPF, flush valve.

.1 Toto model TET1LN32#CP

.2 Bowl – Wall mounted elongated front bowl suitable for 1.28 GPF.

.1 Toto CT708E

.2 American Standard AFWall 3351-001

.3 Tank Type Water Closet

.1 Tank and Bowl – Floor mount, non-pressure assisted, 1.28 GPF.

.1 Toto Eco Drake CST744

.2 American Standard Cadet Pro 215FA-004

.4 Toilet Seat

.1 Bemis Commercial Sta-Tite 1955SSCT

.5 Urinal

.1 Flush Valve – Self Generating, automatic, infrared sensor activated, piston operated, 0.5 GPF flush valve. Urinals shall have a minimum drain size of 75 mm nominal diameter.

.1 Toto model TEU1LN12#CP

.2 Basin – Wall mounted, 0.5GPF.

.1 Toto model UT447E

.2 American Standard Washbrook 6590-001

.6 Recreation or Fitness Facility Showers

.1 Shower Limiter Valve – Symmons Showeroff 4-428

.2 Shower Head – 2.0 GPM Delta RP38357

.3 Sump pumps shall not be located inside the sump. Sump pumps shall be located in a dry well or mechanical space adjacent to the sump. Submersed impellers with motor outside the sump are allowed.

.4 Provide backflow prevention that conforms to either the National Plumbing Code of Canada or the requirements of the municipality, whichever is more stringent.

.5 Obtain approval for water treatment consulting services from City of Edmonton Facility Engineering when special water systems are required.

4.10.5 Heating

.1 General

.1 A primary objective of the heating systems design is to ensure that the operating and maintenance of the system is as simple as possible.

.2 In mechanical equipment rooms containing natural gas burning equipment, provide adequate outside air for combustion and ensure proper venting of flue gases.

.3 In large mechanical rooms containing natural gas burning equipment, provide ventilation to control the room temperature within the temperature ratings of equipment (i.e. electrical panels).

.4 For buildings with high exhaust / ventilation requirements such as parking and repair garages, specify that combustion air be ducted directly to the unit from outside for all gas fired equipment where possible.

.5 Hydronic Systems are the preferred heating systems for COE buildings. Electric heating or reheat systems will only be allowed in very specific cases where it is extremely cost prohibitive to use natural gas as the heating medium.

.6 Pipe insulation jacketing shall be PVC.

.2 Hydronic Heating Systems

.1 Provide a minimum of 2 boilers, each sized at 65% of total heating design capacity. For systems with three boilers or more, n + 1 boilers shall be supplied, where n is the total

design heating capacity.

.2 Variable water flow rates through the boilers will only be accepted for boilers specifically designed for variable flow. Consultants to confirm with COE Engineering Services prior to specifying a variable flow rate boiler and primary system.

.3 On primary-secondary pumping systems, provide a minimum of 2 secondary circulation pumps, each sized for duty / standby operation at 100% of maximum design capacity.

.4 Size heating elements for:

.1 exterior wall envelope heat loss;

.2 infiltration allowance as per 4.13.2, and

.3 where applicable:

.1 roof heat loss, and

.2 reheat of minimum supply air quantity.

.5 Provide a temperature controlled piping loop for air handling system coils, separate from loop supplying radiation, radiant panels and terminal reheat coils.

.6 Provide 50% glycol solution for heating coils in air handling units which may be subject to freezing. Specify pre-mixed inhibited propylene glycol only.

.7 Where terminal coils are installed to reheat increased air flow required for intermittent exhaust purposes, and heating water supply temperature varies, select coils for the lowest supply water temperature anticipated.

.8 Heat pumps should only be considered in systems where a ground source heat loop is being utilized or where all other options have been reviewed as non-viable. Issues such as maintenance, operating costs, filtration, and noise must be reviewed with COE.

.9 Any boreholes or areas part of a ground source heat loop shall be located outside of the building footprint.

.10 Heat domestic hot water with heaters or boilers independent of the building heating system.

.11 Where possible, snow melt systems shall be supplied by boilers independent of the heating system.

.12 Where solar hot water is incorporated in the hydronic heating system, the system shall include 100% redundant pumps supplying flow to the solar collectors. An alarm is to be issued to the BAS upon failure of either pump.

.13 Where an Backup Power source (usually generator) is installed, ensure the following equipment is connected to it on the Standby Power transfer switch distribution:

.1 Heating pumps

.2 Boilers, complete with controls

.3 Associated building management systems

4.10.6 Cooling

.1 General

.1 Chilled water cooling is preferred for systems over 100 kW of refrigeration.

.2 Provide a minimum of 15% glycol concentration in chilled water circuits. Specify pre-mixed inhibited propylene glycol only.

.1 Allow appropriate capacity correction when sizing the chiller.

.2 Provide 50% glycol solution where system may be subject to freezing.

.3 Provide chillers that allow the supply water temperature to be reset electronically.

.4 Do not provide mechanical refrigeration to mechanical equipment rooms.

.5 See heating section for heat pump requirements.

.6 Specify a water softener for all ice plant installations.

.2 Multiple Chiller Cooling Plants

.1 Provide two chillers as a minimum with multiple and/or variable flow pumping on the chilled and condenser water circuits for:

.1 central cooling plants that serve more than one building;

.2 buildings that require a chiller larger than 1750 kW output, and

.3 buildings that serve a special function as determined by the City of Edmonton.

.2 Size chillers by taking into account the magnitude and duration of lighter loads relative to the peak cooling demand to ensure optimum chiller operation.

.3 Reciprocating Chillers

.1 Provide multiple compressors for chillers over 34 kW output.

.2 Provide at least two stages of capacity for compressors over 25 kW output and at least three stages of capacity for compressors over 125 kW output. Chillers with three stages of capacity control or less shall have an additional hot gas bypass stage.

.4 Cooling

.1 Where the mechanical system is to provide cooling in the winter then a dry cooler or closed circuit cooling tower shall be used to reject the heat. Wet cooling towers are not acceptable for winter operation.

4.10.7 Hydronic Systems

.1 Where suitable, wet-rotor type inline pumps shall be specified.

.1 Preferred manufacturers:

.1 Grundfos;

.2 Wilo

.2 Preference should be given to the two-pipe reverse return system for hydronic systems. Direct return systems may only be used if the design safeguards against flow imbalance to terminal

units.

.3 Provide isolation valves on supply and return mains, risers, and major branches.

.4 Provide isolation valves for terminal units at the supply and return connections. Circuit balancing valves must be provided at each terminal unit. Pressure independent control valves are strongly encouraged to ensure proper balancing and increase energy performance.

.5 Specify molybdenum based chemical treatment for hydronic systems.

.6 Piping shall not be supported by floor supports, unless specifically noted as required by equipment manufacturer installation instructions. Pipe supports from floor are to be a channel strut support system (Unistrut or approved equal) with pipe clamp. Consultant shall indicate this in specification.

.7 Mechanical grooved couplings shall be permitted on hydronic heating and cooling systems; but only in mechanical rooms. Mechanical grooved couplings are not to be installed in concealed locations such as shafts, above ceilings etc.

.1 In addition for mechanical grooved couplings to be allowed:

.1 The grooved supplier must furnish a warranty for the entire grooved system. This warranty is to be for a minimum of 25 years and will be for full labour and materials related to any leaks or failures in the system. The warranty will not just be for the product itself but for any ancillary building elements damaged by the product failure.

.2 The grooved supplier to provide inspection services to ensure that every grooved coupling is installed as per the manufacturer's specifications

.3 The grooved supplier to provide training for the installing contractor at the startup on any project where these couplings are to be used. Grooved supplier to also provide ongoing support throughout the project.

.8 Lug style valves are to be used in preference to wafer style valves.

4.10.8 Air Handling Systems

.1 Central

.1 Design air systems, except 100% outside air make-up type and residential furnaces, with an economizer cycle and a return fan.

.2 Provide air plenums with hinged, sealed access doors and lighting for inspection of each chamber.

.3 Use factory manufactured air blenders, pre-engineered and with proven performance, to mix outside and return air to a maximum temperature gradient of 5°C.

.4 For applications where humid return air is anticipated, a heating coil shall be provided to temper outside air prior to entering the mixing section of the air handling unit.

.5 Wetted media type evaporative cooling and humidification shall be a once-through type. Arrange the media and water spray headers in sections to achieve accurate capacity control. Headers to include solenoid valves and adjustable flow control. Sump or drain pan is required. The media shall be dry prior to shut down of air system.

.6 Specify a water softener for all steam humidification installations.

.7 On predominantly cooling-only systems, provide preheat coil with sufficient capacity to supply air at 5°C above room temperature, to maintain continual design ventilation.

.8 When multiple air systems are used, duct return air to each air handling system separately. Do not use common return air plenums.

.9 Do not use mechanical rooms as return air plenums.

.2 Zoning

.1 Make allowances for electronic equipment in air conditioned offices by determining the amount of heat emitted by the equipment installed, or allow 7.0 W/m^2 when heat load cannot be determined.

.2 Limit interior zones, and exterior zones on the same exposure, to maximum 600 L/s, unless a specific function requires more.

.3 Provide separate zones for corner spaces if cooling requirements are significantly different from adjacent zones.

.4 Match heating and cooling zones.

.3 Distribution

.1 Take into account variable air volumes and tenant requirements so that proper air circulation is achieved under all conditions.

.2 For unique ceilings, confirm air flow patterns with special studies, or by testing a mock-up.

.4 Variable Air Volume (VAV)

.1 Use variable frequency drives or alternate, discrete motor on/off control method with adequate granularity, on fan motors to vary supply and return air volumes.

.2 Design perimeter zones with VAV box positioners set at 15% minimum air supply.

.3 Design interior zones with VAV boxes that close to a minimum position to ensure ASHRAE 62 minimum ventilation. Do not provide reheat coils in these boxes unless process air must be tempered.

.4 For zones that require process air, e.g. for fume hoods, provide a VAV or venturi valve system with reheat coils. VAV box or venturi valve positioner to be activated to go to maximum air supply position when process air is required, returning to normal VAV operation otherwise. Venturi valves are the preferred option in any lab environment.

.5 Air Handling Units

.1 Provide a minimum of two-stages for heating sections. Modulating gas valves with larger turn downs are encouraged.

.2 Provide units with economizer functionality including power exhaust for applications with significant cooling loads.

.3 Provide make-up air units with remote control panels that can be interlocked in a supervisory or control capacity to the BAS system, where applicable.

.6 Mechanical Equipment on Roofs

.1 Locate roof top equipment to avoid the need for fall arrest equipment wherever possible.

.2 Architectural screens shall be located minimum 1500 mm away from any roof top equipment. Additional clearance shall be provided where required by the equipment manufacturers.

.3 Consultation with Structural Engineer is required when replacing any ventilation unit located on a roof. Potential snow drifting and deflections need to be addressed. Consult with Structural Engineer to accommodate snow drifting and deflection when locating any mechanical equipment on a roof.

.7 Heat Recovery

.1 Air intakes shall be designed to prevent frosting by providing a preheat coil with wide fin spacing, blending return air, appropriate selection of heat recovery media, or otherwise protecting the system during cold weather operation. Alternating mass exchanger heat recovery systems do not require pre-heat.

.2 Mechanical engineer shall calculate and provide optimal setpoints for all energy recovery system controls.

.8 Filtration

.1 Minimum MERV 8 specified for all applications. Increase performance as required where the application requires.

.2 Heat recovery units shall be specified or installed with filtration installed separate from the heat recovery medium such that filter replacement can be completed without removing the heat recovery medium.

.3 Fan-coil, remote heat pump, and similar equipment installations shall be located above corridors or other normally unoccupied areas, or, where not practical, shall have return air ducting installed such that filters are installed in such area so as facility filter maintenance without disturbing facility staff.

.4 Fan-coil, remote heat pump, and similar equipment installations located within raised floor assemblies shall have return air ducted from a wall mounted return air grill complete with a filter.

4.10.9 Controls

.1 General

.1 All buildings are to be designed and installed with a distributed digital control (DDC) Building Automation Systems (BASs). The BAS shall be used to:

.1 control all major HVAC mechanical systems;

.2 monitor and record mechanical systems performance, and

.3 operate smoke control.

.2 Buildings will be exempt from including a BAS by request only, based on the size and use of the building.

.3 The City of Edmonton has standardized control systems. The supply and installation shall be limited to the following:

.1 Delta Controls, installed by ESC Automation.

.2 Johnson Controls Metasys, installed by Johnson Controls.

.3 Reliable Controls, installed by Serv-All Mechanical.

.2 Proprietary, stand-alone control systems will not be accepted, with the exception of burner fire control and chiller plant control. Examples are as follows, consult with COE Engineering:

.1 Air handling unit components; fans, dampers, heating, cooling systems shall be controlled directly by the BAS base system. There shall not be a separate integrated controller on the air handling unit unless that controller is by one of the three standardized control manufacturers listed above. .

.2 Rooftop and A/C units shall be controlled by BAS contacts using conventional W/Y/G wiring.

.3 VFD speed command shall be via 4-20mA or 0-10v signal.

.4 Burner and chiller control systems, including multi stage systems may be provided with enable and setpoint control supplied by the BAS system using analog and discrete signal.

.5 Heat pump integrated controllers may be provided if all input and output points have separate terminals or hard points. Virtual points from a proprietary controller will not be accepted.

.6 Terminal equipment integrated controllers for VAV boxes, fan coils etc. shall be manufactured by one of the three standardized control manufacturers listed above.

.7 Proprietary multi-zone systems will not be accepted.

.2 BAS Objectives

.1 Provide a comfortable and stable environment for facility occupants.

.2 Minimize energy consumption by:

.1 optimizing start and stop times for equipment and systems that operate less than 24 hours a day;

.2 using a purge mode to ventilate warm spaces with cool unconditioned air before the start of occupancy in areas that operate less than 24 hours a day;

.3 resetting air system supply air temperature set points using feedback from occupied spaces;

.4 resetting chiller system supply water temperature set points using feedback from air system cooling coil demands;

.5 resetting heating system supply water temperature set points with respect to outside air temperature and feedback from air system heating coil demands.

.6 Operate mechanical equipment so as to minimize wear and tear of control components.

.3 Control Documents

.1 Provide a complete schedule of physical control points. For each point provide a short description, the point type, its mnemonic (system name) as well as any alarm limits and fail safe position.

.2 Group physical points in the schedule by mechanical system.

.3 Provide a detailed control sequence for each mechanical system and any global optimization strategies. Include set points, interlocks and alarms.

.4 Laminated, permanently installed I/O lists shall be secured to all BAS panels.

.4 Hardware

.1 System Configuration

.1 Specify a high speed primary communications network with a peer-to-peer protocol to connect all Central Control Stations (CCSs) and Remote Control Units (RCUs) in a multi-drop configuration. Project specifics will dictate minimum allowable communications rates, but as a rule of thumb it is related to system size as follows:

Minimum Rate	System Size
38.4 kbps	< 200 points
115 kbps	200 to 500 points
1.0 Mbps	500 to 750 points
10.0 Mbps	>750 points

.2 Specify an RCU hosted local sub-network for communicating with Terminal Control Units (TCUs) in a multi-drop configuration. The minimum allowed communication rate is 9600 baud.

.3 All ethernet based BAS network connections shall be “home-run” to the Central Control Unit (CCU). Extension of the communication network by routers or switches is not acceptable. Use fibre optic cable if required for long runs.

.4 Specify that the system configuration allow for 10% spare physical point input/output capacity at each RCU.

.5 An additional eight (8) outputs shall be specified to be allocated at the panel closest to the C-Cure security system panel for future alarm use.

.6 Do not allow the control of a mechanical system to be split between two or more RCUs.

.7 The CCU shall be connected to the City of Edmonton network system, via Ethernet, as follows:

.1 Delta sites will connect to the existing City owned server “CHIAJCS81”. ESC Automation will be required to enter the server addressing and networking numbers into the site DSM RTR and Building Maintenance Services will enter the new site’s addressing into the Server DSM RTR.

.2 Metasys sites will connect to the existing City owned ADX server “CHIAJCS82” and must be programmed to reside on that server recognizing the ADX server as the site director.

.3 Reliable Controls sites will be connected to the City server “COEIRWV1” over IP connection. Serv-all mechanical will provide the license for adding the site to Webview and the cost of the license will be included in the tender price.

.8 The firmware on the BAS panels must be compatible to the existing building automation network infrastructure. In instances where backwards compatibility to the City server becomes an issue, the contractor will include the cost to supply and install upgraded software on the City’s server.

.9 All panels and systems must be completely accessible by the City of Edmonton Controls staff, including the ability to make graphical changes and access to programming. Proprietary or control systems with restricted access will not be permitted.

.10 TCUs are NOT to be used to control major equipment such as boilers, chillers and air systems.

.2 Central Control Station (CCS)

.1 A Operator Control Station is not a requirement for network connected sites.

.1 Discuss any non-network connected project with the City of Edmonton Engineering Services Section for CCS requirements.

.3 Remote Control Units (RCUs)

.1 Specify fully programmable, stand alone, microprocessor based controllers that will continue and to communicate with the TCUs over the sub-network if communication with the primary network fails.

.2 RCUs are to include a communication port that allows connection of the PCS for local operator access to all RCUs and TCUs on the system.

.4 Terminal Control Units (TCUs)

.1 Specify standalone microprocessor based controllers that will continue to control if communication with the sub-network fails.

.2 Use TCUs to control terminal heating/cooling devices only.

.5 Actuators

.1 Specify electrically powered actuators to drive all valves, dampers and other control devices, except that in additions or renovations where pneumatic power, of adequate capacity is available, the central equipment actuators may be pneumatically powered.

.2 Electronic actuators should have current limiting and auto ranging circuitry.

.6 Control Valves

.1 Select control valves with flow characteristics to match the application. Do not oversize valves.

.2 Specify the CV for all control valves.

.7 Dampers

.1 Carefully match the damper type, face area, power of actuator, and method of rod and

damper linkage to give a linear volume control characteristic.

.2 Specify face area and pressure loss characteristic of modulating mixing dampers.

.3 Design for good mixing of warm and cold air. Direct return and outside air streams across each other and use air blenders.

.8 Airflow Measuring Stations

.1 Size airflow measuring stations to provide an adequate differential pressure signal at minimum anticipated flow rates.

.9 Sensors

.1 High quality thermistors are acceptable for all temperature measurements.

.2 Specify electronic room thermostats that allow access to TCU set points and configuration information, by either:

.1 a communication port for the PCS, or

.2 a display window and program keys incorporated into the room sensor.

.10 Control Wiring

.1 All controls wiring to be in EMT or rigid metal conduit.

.11 Current Transducers / Switches

.1 Any current transducer / switch specified shall be capable of outputting an analog signal.

.5 Software

.1 Colour graphics user interface and application software will reside on the City of Edmonton controls servers.

.2 Specify dynamic colour graphic screens as follows:

.1 Site graphics must be of current vintage and generally match the existing graphics used throughout the City of Edmonton network.

.2 a main screen showing the basic floor plan of the facility indicating locations of mechanical rooms;

.3 a screen for each mechanical system;

.4 a screen for each floor or zone to show space temperatures;

.5 a screen for each floor or zone of smoke control.

.6 various summary screens for global information, zone temperatures, box flow rates etc.

.7 Metasys graphics must reside on the ADX server and not the site panels.

.8 Reliable Controls sites must provide the original Visio or Adobe Illustrator graphic files to the City.

.9 TCU control sequences are to be programmed using exactly the same high level language used in the RCU, or through a suitable configurable strategy in firmware.

.3 All control points shall be trended at minimum 15 minute intervals for a minimum of 72

hours.

4.10.10 Roof Drainage Systems

.1 Provide a minimum of two roof drains per contained near-flat roof area, except a single drain may be provided for near-flat roof areas not greater than 6 sq. m, e.g. entrance canopies, elevator penthouses.

.2 Use internal drainage systems with open flow drains and minimum 100 mm diameter pipes. Do not use controlled flow drains.

.3 Direct flow that is discharged at grade so that it does not flow onto pedestrian or vehicle traffic areas, where it could freeze and become a safety hazard, or onto areas where it could cause erosion damage.

.4 Terminate roof drain exterior discharge outlet with an elbow at least 1.0 m above grade. Provide a thermostatically controlled immersion heater from the discharge back into the building to prevent freeze-up during the winter.

.5 Rainwater is not to be used in any systems unless discussed with City of Edmonton Engineering Services.

4.10.11 Radon Mitigation

.1 All building designs shall have all three of the following radon mitigation measures implemented as defined in “EPA Radon Prevention in the Design and Construction of Schools and Other Large Buildings”:

.1 Soil depressurization

.2 Building pressurization

.3 Sealing radon entry routes

4.10.12 Commissioning

.1 The City will retain the services of a third party Commissioning Consultant to perform commissioning of building systems. This is in addition to the services provided by the Consultant and Contractor and does not remove any responsibility from the Design Consultants or Contractors. The Design Consultant is expected to work with the Commissioning Consultant in this process and to provide required information in a timely manner. Refer to the “Commissioning Manual – Commissioning Process and Guidelines” for more information on Commissioning of City facilities.

4.11 *Electrical*

4.11.1 References

.1 Meet or exceed guidelines and standards of the following organizations:

.1 Canadian Standards Association

.2 Illuminating Engineering Society of North America

.3 Institute of Electrical and Electronics Engineers

.4 Insulated Cable Engineers Association

.2 EPCOR, *Customer Connection Guide*

.3 Refer to Appendices for additional referenced standards.

4.11.2 Service and Power Distribution

.1 Utility Service

.1 Coordinate new and modified services with EPCOR. Refer to latest EPCOR connection guide.

.2 Load Calculation

.1 Provide load calculations for Utility and on-site generation services as part of the Contract Documents.

.1 New Service: Provide calculation as per CEC Section 8. Discuss future load allowances with COE Engineering Services. Preliminary sizing to be based on minimum of 160 W/m^2 multiplied by total building area for general power, lighting, convenience loads and basic mechanical equipment. Heavy power usage areas (ie. Data Centres) to be calculated using 200 W/m^2.

.2 Addition to existing service/feeder: Provide calculation as per CEC Section 8. Preliminary sizing to adhere to W/m^2 listed in item 1 above. City to provide maximum demand load for most recent 12-month period where available.

.3 Single Line Drawing

.1 Provide electrical single line diagram as part of the Contract Documents, indicating the following:

.1 Configuration, type, voltage and amperage ratings of switchgear, transformers, panelboards and motor control centres (MCCs).

.2 Type, size and amperage ratings of services and feeders.

.3 Type, frame size and trip rating of overcurrent protective devices.

.4 kAIC rating of switchgear, panelboards, transformer secondaries and overcurrent devices.

.5 Anticipated demand load at switchgear, panelboards and MCCs.

.6 Arc flash incident energy levels at all points where specified labels required.

.7 Service and distribution grounding/bonding.

.8 Renovation/Rehab: Provide complete facility wide single line diagram; partial single line diagrams will not be accepted. City to provide existing master single line diagrams where available.

.2 Provide copies of single line diagrams from Record Drawings, recording actual construction, to:

.1 Incorporate into Operating and Maintenance Manuals.

.2 Display in frame with clear plexiglass and hang in each major electrical equipment room,

with equipment in the respective room highlighted. This requirement is to be included in the electrical construction specifications.

.4 Protection and Control

.1 Perform arc flash, short circuit, and coordination study to inform and validate requirements below. Refer to 'Appendix E: Arc Flash Guideline' for additional information.

.2 Ensure priority tripping and coordination of overcurrent and ground fault devices. Provide final consolidated trip curves for additions, services sized 600 A and over, and multi-building sites.

.3 Ensure adequate fault interrupt ratings of all switchgear, panels, MCCs and overcurrent devices. Provide calculation results when requested by the City of Edmonton.

.4 Use fully-rated overcurrent protective devices throughout distribution system. Series-rated combinations may only be used with permission by the City of Edmonton.

.5 Where ground fault protection is provided on services and feeders, ensure protection is also provided for downstream feeders and loads that are susceptible to nuisance ground faults. Ensure ground fault equipment is coordinated to prevent upstream devices tripping before downstream devices.

.6 Evaluate the feasibility of peak demand control through the use of load shedding or emergency generation equipment. Review all options with the City of Edmonton.

.7 Do not provide under voltage protection on main breakers. Provide single phase motor protection using differential overloads or phase loss.

.5 Harmonics

.1 Building shall meet IEEE 519 requirement at PCC. 519 compliance should be determined as part of a full load commissioning test and/or monitoring of ITHD & VTHD throughout first year of operation.

.6 Service Spaces

.1 For services under 200A: Main Electrical Service Room may be a shared Mechanical/Electrical space.

.2 For services over 200A: Main Electrical Service Room to be dedicated room containing no mechanical/plumbing fixtures.

.3 Electrical Room

.1 Locate in core areas of the facility and stack vertically where possible.

.2 Locate at grade when room contains critical pieces of electrical equipment (ie. switchgear, etc.).

.3 Provide minimum of one electrical room sized 1800 mm by 3000 mm (6' by 10') for every 930 sq. m (10,000 sq. ft.) of floor area served or portion thereof.

.4 Doors to be large enough (width and height) to allow for the removal and replacement of the largest piece of equipment.

.5 Floor drain to be provided.

.6 Provide raceway system between all Electrical Rooms, Closets and Network Access Rooms (refer to IT Guideline for additional information).

.7 Where room contains heat generating equipment, adequate cooling and/or ventilation shall be provided by mechanical.

.4 Electrical Closet

.1 Not permitted to contain transformers, motors or other heat generating equipment.

.2 Locate in core areas of the facility and stack vertically where possible.

.7 Switchgear, Panelboards and MCCs

.1 Switching and Overcurrent Devices

.1 Use bolt on molded case circuit breakers with thermal, magnetic trip for all circuit protective devices except as follows:

.1 Use industrial duty, draw out type air circuit breakers for all services and feeders 800 Amps and over.

.2 Use moulded case breakers with solid state trip units for all services over 400 Amps and under 800 Amps.

.3 Use metal enclosed switchgear with air vacuum circuit breakers for all high voltage equipment.

.4 Obtain the approval of the City of Edmonton for the use of fused equipment. Consideration will only be given where fault duties of equipment require a limitation of the available fault current.

.2 Bussing

.1 Use solid copper for switchgear sized 200 A and over.

.2 Provide min. 25% spare capacity for future growth.

.3 Metering & Power Monitoring

.1 Provide integral, multichannel, owner metering for incoming MDP utility service and distribution feeders unless otherwise directed by the City of Edmonton. Contact Engineering Services for currently recommend models. On larger, more complex distributions consider sub-metering on secondary CDPs & Panels. Consult with Engineering Services.

.2 Meter channels to monitor true RMS values for phase voltage (line to line and line to neutral), phase currents, kVA, kVAR, kW, PF, Hz, MWhr, kWd, kVAd, ITHD, and VTHD.

.3 Meter to have panel mounted, or adjacent, display capable of displaying above values for at least the service connection.

.4 Meter to be field programmable via front keypad and communications port or wireless equivalent.

.5 Size incoming service current transformers such that the initial design full load is approximately 60% of rating.

.6 Meter to have minimum of one (1) data output port.

.7 Specifications are to instruct that any required meter setup, control, or monitoring software is to be supplied to the City.

.8 Meter must connect to the Building Automation system and be BACnet listed for monitoring and logging.

.9 Meter to have minimum of one (1) pulse input(s) for connection of Gas and/or Water meters.

.4 Control

.1 Control through MCCs generally via BMS/BAS connection. When process control required coordinate with Client and consider alternatives such as “Smart” MCCs.

.5 Panelboards

.1 Provide panel schedules indicating breaker size and wattage all connected loads. Panels to be a maximum of 50% filled at completion of design.

.2 Hinged, door-in-door construction.

.3 Lockable.

.4 Distribution panelboards to be located in dedicated rooms and closets. Provide additional space on wall for at least one (1) future panel.

.5 Single pole breakers with handle ties are not permitted in place of multi pole breakers.

.6 Provide minimum of two (2) spare 27 mm conduits c/w pullcord to ceiling space for all recessed panelboards.

.6 Accessories

.1 Provide lifting equipment for all industrial type air circuit breakers, high voltage switches and stacked high voltage starters.

.7 Working Clearances

.1 Provide all switchgear and MCCs with minimum 1.5 m front clearance, in addition to space required for drawout equipment in full disconnect position, and all free standing switchgear with minimum 1.0 m back and side clearance.

.8 Housekeeping Pads

.1 Provide all floor mounted equipment with a 100 mm (4”) housekeeping pad except for roll-out style switchgear.

.9 Outdoor Pedestals

.1 Provide precast concrete base and local heat to provide minimum temper heating to 5°C to facilitate proper operation of equipment and prevent condensation.

.8 Transformers

.1 Location

.1 All Transformers shall be installed such that replacement is possible without unforeseen

building modifications nor surface or structural damage. Provisions may include double doors, expanded hallways, reinforced and or widened routes to loading docks and grade, removable wall panels, top access pits, etc.

.2 Main Building Transformers: locate standard 600V or 208V outside with pads and rails as per EPCOR guide. Provide screens where required by project. Location to be serviceable as required by EPCOR standards and as close as possible to building service entrance to reduce capital and operating costs (line losses). All primary, MV services to be in fully isolated, interior vault segregated from 600V or lower distribution.

.3 All Indoor Transformers over 45 kVA: allow for removal by wheel mounted equipment.

.4 Indoor transformers are to be preferentially floor mounted on housekeeping pads. Suspended installation only permitted for transformers within service rooms where there is lift accessibility. Transformers 45 kVA and less may be cantilevered/wall mounted where access is not impeded by other equipment. Coordinate transformer heat removal with Mechanical.

.2 Type

.1 Use minimum K-4 rated distribution transformer. Increase K rating or opt for HMT, Zig-zag, and/or alternating phase layout where advisable due to amount of non-linear/harmonic load.

.2 Autotransformers only permitted for dedicated equipment step-up/down applications.

.3 Copper windings only.

.3 Secondary Voltage (isolation/distribution)

.1 347/600 V, three phase, four wire, solidly grounded wye.

.2 120/208 V, three phase, four wire, solidly grounded wye.

.3 120/240 V, single phase, three wire, solidly grounded, center tap.

.4 Obtain approval from the City of Edmonton for other voltages, connections, or any impedance grounding schemes.

.4 Acoustical Considerations

.1 Ensure adequate acoustic ratings, treatment location and mounting of transformers. Refer to Section “Acoustic Considerations: Electrical for specific requirements”.

.9 Feeders

.1 Use copper conductors for feeders.

.2 Provide a full capacity neutral and a bonding conductor with all feeders.

.3 Other than main service feeder cables and/or raceway, feeders are not permitted to be located in slab or below slab-on-grade.

.10 Solar Photovoltaic System

.1 System to connect to facility electrical system at Main Distribution Panel (MDP).

.2 All wiring to be in metal conduit (min. 21 mm).

.3 Exterior installs to utilize water tight fittings and conduit to be elevated above roof surface using manufactured rubber rooftop conduit support c/w unistrut.

.4 Where DC power runs inside the facility, conduit shall be mounted a minimum of 254 mm below the roof decking.

.5 System to be fixed tilt with an orientation that maximizes annual production.

.6 Maintain 2 m clearance from unprotected roof edge.

.7 Maintain access paths for equipment maintenance.

.8 Roof penetrations to utilize doghouses; gum boxes are not permitted.

.9 Flat Roof Install

.1 Racking system to be non-penetrating and anchored with ballast weights. Ballast to be anchored to rack.

.2 Manufacturer approved protective mats to be installed between the rack and roof membrane

.3 Windshields shall be provided.

.10 Sloped Roof Install

.1 Flush mount.

.11 Power Factor Correction

.1 Correct power factor to at least 95% where normal loading yields a power factor of less than 90%.

.2 Locate PFC close to the motor or group of motors, preferably downstream of starters.

.3 Review use of automatic correction equipment with the City of Edmonton.

.12 Arc Flash and Shock Hazard Labelling

.1 Refer to Appendix E – *"Arc Flash Design Guideline"*

4.11.3 Lighting

.1 General

.1 Design to maximize the energy efficiency of lighting systems.

.2 Only use the task-ambient approach where work surface and task orientations are predetermined and as agreed to by the City of Edmonton.

.3 It is not necessary to design for worst case work surface and task orientations in general office space.

.4 Design to minimize direct and reflected glare and maximize contrast.

.2 Recommended Lighting Levels

.1 Design lighting levels to IES recommended lighting levels for horizontal and vertical illuminance. Refer to the latest edition of the IESNA Lighting Handbook.

.2 Consider the following criteria when deciding the appropriate average maintained light levels

within a space. Criteria may be determined upon consultation with the City of Edmonton.

.1 Visual Tasks performed: High, medium or low contrast, large or small size

.2 Occupant Age

.3 Task Duration: Short or Prolonged periods

.4 Workplane height

.3 Consult with the Architect and consider the room finishes (colour and reflectance) when performing light calculations.

.4 Maintained Values: Use the following criteria for calculation of maintained values.

.1 Luminaire Dirt Depreciation: 0.90 (Typical office environment). This value may be adjusted based on project specific criteria such as dirtiness of the environment.

.2 Lamp Lumen Depreciation: LLD factor is different for each lamp type. Utilize mean lumen output ratings from lamp manufacturer when calculating light levels in a space.

.3 Uniformity

.1 All areas in a space need not be to minimum average maintained values if functions permit. Lighting levels may be non-uniform. For example, circulation areas in an office may be of a lower level than recommended for the work surface.

.4 Exterior Lighting

.1 This section applies to sites within the City of Edmonton (CoE) that have metered exterior lighting (ie. Facility site lighting, Park lighting) that is maintained by the City. Unmetered installations (ie. Roadways) are to be designed to ‘Road and Walkway Lighting Construction and Materials Standards’, latest edition, available through the CoE Transportation Department. For additional information regarding a specific site please contact CoE Engineering Services.

.2 All projects to adhere to the CoE ‘Light Efficient Community Policy’, latest edition.

.3 Use LED for parking, roadway, area lighting, and building exterior. Acceptable voltages are 120V, 208V, 240V. 347V not permitted for new installations. In retrofit situations where only 347V is available and no conversion feasible, true integrated 347V drivers preferred (no external autotransformers) and confirm acceptability with CoE Engineering Services prior to specification.

.4 Approved luminaire head manufacturers include “Philips Lumec”, “Cooper/Eaton”, or “Acuity Brands”. Preferentially recognized families already approved by Transportation for roadway or MUT or those otherwise previously used by CoE. Acceptable examples include “Philips Lumec” ‘Roadstar’, ‘Roadview’, ‘Streetview’, ‘Metroscape’, ‘Urbanscape’ & ‘Ancestra’; “Cooper/Eaton” ‘Ridgeview’. Explicitly confirm exceptions with CoE Engineering Services prior to specification.

.5 Use cast in place or precast concrete piles with internal ducts and embedded bolts/rods. 280 mm (11”) BCD nominal standard. Top of pile shall be 150 mm above finished grade in soft landscaped areas, 150 mm if in sidewalk or other hard surfaced areas. Additionally, for parking lots and roadway areas where there is likely a risk of vehicular impact, top of pile

shall be 1000 mm above finished grade.

.6 Pile design & size to be coordinated with the structural consultant taking into account soil & grade conditions and final pole/head requirements. Acceptable examples for precast piles include Armtec '8-0082', '8-0083-6', & extended (3000 mm) '8-0079' depending on application. Cast in place to be fully detailed.

.7 Poles to be square or octagonal, galvanized steel and painted with 2 coats of enamel on primer or polyester powder coated. Approved manufacturers include Novapole & West Coast Engineering. Any aluminum and/or custom poles to be explicitly approved by CoE Engineering Services. Pole supplier to confirm design suitability for luminaire head EPA and associated installation location parameters.

.8 If cameras are specified to be pole mounted then please ensure that poles are equipment with segregated raceways for mixed voltages with manufacturer approved camera mounts. Custom poles to be explicitly approved by CoE Engineering Services.

.9 Luminaires including emitter diode package & driver shall be explicitly rated to operate from -40°C to 40°C.

.10 Exterior luminaires to have minimum colour rendering index (CRI) of 60 and correlated colour temperature (CCT) of 3000 (± 200) K with a D_{UV} of -0.006 to 0.006. Optionally a CCT of 4000 (± 200) K with a D_{UV} of 0.005 to 0.007 will only be accepted with explicit approval from CoE Engineering Services.

.11 A single head's emitter diode package/board should not exceed 12000 lumens for general purpose horizontal illumination. Consult with the City of Edmonton for project-specific details that may fall outside this limit.

.12 Use UV resistant diffusers/lenses for exterior luminaires and consider vandal resistance.

.13 Use full cutoff luminaires for all parking, roadway and area lighting. House side shielding to be specified on property perimeter luminaires unless there is otherwise lit road, or other adjacent city property, that could benefit from spill light. Wall mounted luminaires to be positioned or shielded to eliminate glare and light trespass to adjacent, non-city, properties.

.14 Where multiple different architectural exterior luminaires are used (eg: pole mount, bollard, building mount), select luminaires to complement each other, possibly from the same manufacturer "family".

.15 Bench and in ground lighting by explicit approval only, please contact CoE Engineer Services prior to specification.

.16 Bollard lighting by explicit exception approval only and used for decorative, architectural purposes only, not general area lighting. Follow above pile guidelines. Breakaway base design required except when not indicated due to security requirements.

.17 Custom products highly discouraged and not permitted without explicit approval from CoE Engineering Services. Eg. Architectural marquee luminaires, bollards, rail and rope light installations, etc.

.5 Interior Lighting

.1 Lighting Supply voltage to be preferentially 120V but not to exceed 240V. 347V not

permitted.

.2 Purpose designed LED luminaires from major manufacturers preferred; must meet IES LM-79 and IES LM-80. For some architectural purposes E26/GU10 fixtures with LED lamps may be acceptable.

.3 Minimize the number of unique lamp types used. Specialty lamps beyond E26, E39, GU5.3, GU10, G5 & G13 by exception only.

.4 For Lighting Power Density targets, please refer to Division B, Part 4 of NEC 2011

.5 Use of non-LED, generally incandescent, sources not permitted without explicit approval from CoE Engineering Services. Propose only where minimal burning hours are expected and/or significant architectural considerations are presented.

.6 LED sources to have minimum colour rendering index (CRI) of 80 and have colour temperature of 4000K, or as determined in consultation with the City of Edmonton depending on building use. Colour temperature should be consistent throughout building except intentional architectural purposes.

.7 Cove lighting not permitted without explicit approval from CoE Engineering Services due to stringent reliability and service requirements.

.8 The use of LED tube style lamps for fluorescent luminaire replacement or retrofit generally not supported. Consult CoE Engineering Services for exceptions.

.9 Custom products highly discouraged and not permitted without explicit approval from CoE Engineering Services. Eg. Architectural marquee luminaires, bollards, rail and rope light installations, etc.

.10 High efficiency, low brightness diffusers are preferred in areas containing computer display workstations.

.11 Consider direct/indirect combination lighting in office areas and where glare is to be minimized, but only if adequate ceiling height exists.

.6 Drivers and Ballasts

.1 Use energy efficient electronic, solid state designs with built in inrush and surge suppression.

.2 Total Harmonic Distortion of less than 12% and Power factor greater than 0.95.

.3 Where dimming is required must be capable of 0-10V and/or DALI 2.0 as applicable to control method.

.7 Control

.1 General

.1 Lighting control systems (LCS), if implemented, shall provide manual, automatic, or programmable lighting control. The application of this control and the controlled zones will depend on a number of factors including: frequency of use, available daylighting, normal or extended work hours, and operational/security requirements. All of these factors must be considered when establishing zones, zone controls and the overall lighting control narrative/strategy.

.2 LCS shall be explicitly approved by the City. Currently approved methods are:

.1 Acceptable as per Low Voltage Relay System section.

.2 Acceptable as per Digital Addressable System section.

.3 LCS must be capable of integrating with the building management system (BMS) and communicate over BACnet/IP with BBMD capability.

.4 LCS to be fully integrated into CoE centrally monitored BMS network before turnover.

.5 LCS must provide the ability to use standard BMS structure to command objects: zone controls and schedule objects.

.6 LCS must provide ability to use standard BMS structure to view objects: power/energy meters, individual lighting stem alarms or failures, motion/occupancy sensors, light output levels(intensity), and indoor ambient light levels(intensity).

.7 LCS equipment to be logically placed to minimize circuit lengths and to take advantage of the physical facility topography without exceeding maximum circuit distance of 300 m. That is: one per floor or to the closest electrical room for ease of maintenance and troubleshooting.

.8 Programmable relays, field devices, DACs or similar not to be located in walls or ceiling spaces, to be logically marshalled in common panel.

.9 Any specialized equipment or programming required for commissioning, troubleshooting or general maintenance to be provided at turnover.

.10 Do not use digital addressable systems in large zones and/or where dimming is not required. Examples include: gymnasiums, natatoriums, arenas, garages, apparatus bays, and 24/7 operating facility.

.11 Provide switching for conference rooms, board rooms, groups of common offices, large areas of single use, and offices.

.12 Do not use breaker switching.

.13 Nightlights, if switched, are to be controlled from a keyed switch located in a secure location.

.14 Provide time clock or programmed switching for large general use areas.

.15 Provide automated dimming system in office areas or other sensitive areas to prevent initial overlighting of the space and ensure adequate light levels throughout the life of the light source.

.16 Daylight harvesting to be provided with photocell control wherever feasible and provide control narrative for facility integration.

.17 Provide single photocell, manual electro-mechanical time clock, or security device control or a combination thereof for exterior luminaires. Consider facility usage and security when determining the exterior lighting control scheme.

.18 Wireless controls not permitted in new construction; renovations by explicit approval from CoE Engineering Services.

.19 Provide motion sensor control where economics are favourable. Areas to consider include washrooms, lunch/break rooms, copy rooms, individual offices, low-use corridors, and nightlights. Motion sensors in offices are to be manual on, automatic off. Use dual technology (PIR & microphonic) sensors in areas where line of sight cannot be assured, such as washrooms. Depending on technology (LED vs fluorescent) and situation, ensure adequate time outs to avoid frequent or nuisance cycling.

.1 Do not use motion sensor control in mechanical/electrical rooms, elevator rooms, or service areas.

.2 Do not use motion sensor control in rooms/areas that require roof and/or roof access

.3 Ultrasonic sensors not permitted.

.20 Ensure that that equipment is UL 924 (Emergency Lighting Equipment) and UL 2043 (Heat and Smoke Release for Air-Handling Spaces) listed as required.

.21 Provide at minimum 25% spare capacity in lighting control panels.

.2 Low Voltage Relay System

.1 Where low voltage switching is used, locate low voltage lighting panels adjacent to lighting distribution panelboards.

.2 Each lighting control relay shall be capable of controlling incandescent, fluorescent, electronic ballast and H.I.D. lighting loads and have an inrush capability of 3000 amperes. Relays shall be complete with at minimum 5 year manufacturer's warranty.

.3 Lighting control relays shall include captive screw terminals for both the line voltage and the low voltage connections. Switching the relay shall be accomplished with one (1) signal wire and a common return. The signal wire shall be able to signal on and off and shall carry status current that indicates if the relay is on or off.

.4 Relays are to be individually replaceable.

.5 Relay must be provided with a manual override.

.6 Capable of mixed load voltages as well as mixed sources (i.e. normal and emergency power).

.7 Ensure that relays are provided with a single 0-10V dimming output (IEC 60929 Annex E) capable of sinking 30mA (corresponding to 30 typical ballasts/LED drivers).

.8 Ensure that under loss of utility power, relay contact returns to the normally closed position and bypasses control to the emergency/egress lighting.

.3 Digital Addressable System

.1 Must be DALI 2.0 compliant including fixtures and any input devices.

.2 Must be capable of continuous dimming.

.3 Must be capable of being addressed individually or as controlled group.

.4 Must be capable of being reconfigurable based on digital addressability/system.

.5 Provide documentation for sequence of operations, device addressing, device locations

and specifications outlining each function of the fixture requirements above.

.6 Must be capable of providing energy consumption data through BMS.

.7 Must be capable of providing driver & lamp status - on/off, brightness level, and failures through BMS.

.8 Must be capable of providing alarms and monitoring through BMS.

.9 Must be capable that a loss of power on the DALI bus, lighting will go to 100%.

.10 Ensure six (6) spare address are left available for each DALI Loop (maximum of 58 addresses used s used during design).

.11 Provide spare parts lists for review and discussion with CoE Engineering Services.

.8 Installation

.1 Support recessed luminaires independently of T-Bar.

.2 Only use luminaries manufacturer approved for installation method specified. Failure to do so may result in mechanical failure or heating causing reduced lifetime and/or fire hazard.

.3 Indicate on drawings the method of support for luminaires. Provide details if required.

.4 When fixture installation requires securing the unit with screws, dimensional lumber substrate is to be used as screw stripping and tear out in gauge metal or plywood substrate poses a risk to occupants. Where use of dimensional lumber is not feasible, toggle anchors must be specified.

.9 Maintenance

.1 Commonly replaced components used in specified lighting products, such as LED arrays/lamps and ballasts/drivers, are to be available locally from wholesale supplies and/or distributors. Ensure the manufacture specified guarantees compatible replacement parts for a minimum of 10 years.

.2 All LED arrays, lamps, lens, ballasts, drivers, etc shall be readily accessible for service and replacement without any requirement for architectural remediation (eg. carpentry, drywall, painting) . All luminaire replacement elements such as lenses, drivers, lamps, panels, hatches, grills, etc. shall be 2.5 m or less in length and of a reasonable cross-section and weight.

.3 Luminaires located in high areas (above 3 m) are to be positioned to allow for maintenance and replacement of parts with standard City of Edmonton maintenance equipment.

.4 LCS to have local technical support & maintenance with factory trained technicians and service and parts available within 24 hours.

4.11.4 Branch Wiring

.1 General

.1 Use copper conductors minimum #12 AWG conductor size.

.2 Provide a separate bonding conductor in all branch circuit raceways. Conduit shall not serve as bond.

.3 Branch circuit cable and/or raceway is not permitted to be located in slab or below slab-on-grade.

.4 Minimum raceway size to be 21 mm.

.5 Obtain approval of the City of Edmonton for the use of non-metallic sheathed cables. Consideration will only be given for buildings of combustible construction.

.6 Use AC-90 cable only in short lengths, less than 3 m, for final connections to luminaires and similar equipment or vibration isolation.

.7 All receptacles to be specification grade.

.8 Provide separate circuits for coffee makers, refrigerators and microwave ovens. Consider 20A 5-20R T-slot type general purpose receptacles in kitchen/coffee counter areas.

.9 Housekeeping receptacles in corridors to be located 15 m on center and 7.5 m from corridor ends.

.10 Floor boxes to be of heavy duty flush (<2 mm to finished floor) type that can be closed while in use and resistant to water ingress.

.11 All branch circuits to be labelled with panel name & circuit designation.

.1 For circuits less than or equal to 20A and 240 volt, panel name and circuit designation to be indicated with a wrap around style label on faceplate and permanent marker inside box.

.2 Otherwise, All higher voltage and ampacity circuits to have lamacoid styles label with panel name, circuit, and voltage/phase.

.12 For high humidity applications, ensure surface raceways are galvanized and painted (coordinate with Architectural).

.2 Provisions for Computer and A/V Based Equipment

.1 A/V requirements to be coordinated with City IT Network Analyst when a network connection is required.

.2 Identify electronic equipment and systems likely to be affected by electrical service disturbances including voltage sags, surges, short and long term transients and outages. For this equipment, determine the extent of protection necessary for normal operation.

.3 Protection and Power Conditioning.

.1 Isolation Transformers: electrostatically shielded transformers for equipment affected by transients and noise.

.2 Regulated Power Supplies: for equipment and systems affected by transients, noise, voltage sags and surges.

.3 Electronic Filters: for equipment affected by power line noise.

.4 Uninterruptible Power Supplies: for equipment requiring continuity of service.

.4 Surge suppression

.1 Install surge suppression on utility incoming mains.

.2 For areas containing a large group of electrically delicate equipment, provide surge protection on panelboards serving the area.

.3 Coordinate surge suppression devices within the same power distribution system.

.5 Computer Circuits

.1 Supply only electronic equipment with these circuits. Do not use these circuits to supply convenience receptacles or mechanical equipment.

.2 Generally supply only two computer workstations per circuit.

.3 Provide a separate, dedicated bond and neutral back to panel for each circuit.

.4 In situations where multiple circuits will supply potentially interconnected equipment in an area, ensure the circuits feed from a common panel.

.3 Block Heater Outlets

.1 Design to shut off all power to outlets when outside temperature is above -10°C.

.2 Provide timer to cycle energized outlets on and off at a maximum 30 minute period. If there are more than 30 parking stalls, split the load into two groups and alternately cycle load.

.3 Assuming supply sized to supply all outlets simultaneously, inhibit cycling below -30°C.

.4 Use the building's BAS system to control parking lot loads where possible. Coordinate with Mechanical Section.

.5 Provide override switch (ie. H-O-A) for parking lot controller testing/maintenance.

.4 Electric Vehicle Supply Equipment

.1 Ensure that EV chargers are monitoring-enabled and payment-enabled including network connection.

.2 If more than one EV charger is planned to be installed, consider utilizing dual-port chargers in place of two single port chargers.

.3 Charging stations to be located as close as possible to the electrical supply service while also assuring that they are conveniently located for drivers.

.4 Provide curbs, bollards, wheel tops and/or equipment setbacks to prevent vehicle damage to equipment.

.5 Provide adequate lighting in area of charger to facilitate nighttime use.

.6 Consideration to be given to using higher charge rate equipment (40A, 240V)

.7 Charger to be SAE J1772 compatible.

.8 Currently acceptable manufacturers include ChargePoint, Sun Country, Flo, or approved equivalent.

.5 Provisions for Equipment

.1 Custodial

.1 Storage/Janitorial rooms to have adequate (number and current capacity/type) receptacles for any equipment. Ensure mechanical is aware of any exhaust

requirements due to battery charging.

.2 Ensure adequate (number and current capacity/type) receptacles throughout facility for equipment such a floor polishers, etc.

.6 Provisions for Mechanical

.1 Indicate location and circuiting of all mechanical control panels on drawings.

.2 Coordinate electrical equipment required for mechanical equipment with mechanical designer. Items may include UPS for head end of BAS systems, power filters, regulators, electrically powered valves and dampers, lighting in air handling units, heat tracing of piping or equipment, etc.

.3 Rooftop receptacles to be on dedicated branch circuit.

4.11.5 Life Safety, Emergency, and Security Systems

.1 General

.1 Provide emergency power for all life safety and security systems. Pay particular attention to fire rating of emergency lighting feeds or feeds to smoke evacuation fans, elevators, fire pumps or similar emergency life safety classed equipment.

.2 Provide battery backup for all systems with volatile electronic memory.

.3 Refer to ‘Security and Card Access System Design Guideline’, ‘Video Surveillance System Design Guideline’ and “Fire Alarm System Design” in Appendices for further information.

.2 Fire Alarms

.1 Show F/A devices on plan drawing(s). Include a fire alarm system riser diagram in contract documents.

.2 Use horn/speaker-strobe combination devices for audio-visual signals unless site conditions dictate otherwise.

.1 Audibility shall be code minimums of 65 dB SPL (75 dB SPL if Residential Occupancy) and at least 10 dB SPL above predicted operational noise floor. Do not exceed 90 dB SPL in non-service spaces without explicit approval.

.2 When using speaker for alerting, design for lower SPL and higher density of speakers to maintain intelligibility.

.3 Coordinate duct detectors with mechanical to ensure air velocities are compatible with detectors.

.4 Coordinate sprinkler flow alarms and valve tamper locations with mechanical and indicate on fire alarm plan.

.5 Indicate all auxiliary connections to the F/A panel, including elevators, BAS, emergency diallers, fire door hold-open devices, fan shut-down relays, cistern tank levels, etc.

.6 Note that any and all consultant expenses for fire alarm verification are considered included in design and construction management fees.

.7 All F/A wiring to be red FAS cable or fibre in conduit. BX/AC90 only acceptable for movement or vibration isolation, final device stub, or in a retrofit situation where running

conduit not practical. Length to be 3m or less without explicit CoE approval and product must be factory supplied as red armoured FAS.

.8 Fire Alarm Communications (dialer) to be provided for all ULC and non-ULC compliant installations as per

.9 'Fire Alarm Communication Design Guideline' in appendix F.

.3 Generators

.1 Locate generator and associated electrical equipment in areas not subject to flooding.

.2 Provide sufficient clearances for maintenance and repair personnel to access all sides of the generator.

.3 Provide provisions for removal/replacement of generator at end of life that does not require substantial building modifications.

.4 Programming software used to program the generator is to be non-proprietary and provided to the City.

.5 All cables or equipment required for monitoring to be provided to the City.

.6 Transfer switches are to be capable of remote monitoring of generator status and state.

.7 When fire pump transfer switch is on generator power and pump is running, generator battle short mode shall be engaged.

.8 Provide vibration isolators for field installation.

.9 Paralleled generator configurations shall only be considered for extremely high availability applications and/or large loads. They shall be of integrated, PLC controlled switchgear style and fully configured to operate and load shed feeder breakers under failed generator and overload conditions. BAS only load shed not acceptable.

.10 Service and parts shall be available within 24 hours

.11 Manufacturer shall be experienced in installation and operation of generator set of comparable size.

.12 Manufacturer shall guarantee availability of parts for minimum of 25 years.

.13 Generator shall include at a minimum:

.1 Remote annunciator panel

.2 External Battery Charger.

.3 Braided fuel lines c/w union connections for fuel inspections (carburetor to tank)

.14 Enclosure

.1 Generator to be installed within facility. Where not feasible and with City approval, a sound attenuated enclosure and Winter Package may be acceptable. Refer to section Generator Power Supply for Life Safety Loads for additional requirements for Life Safety loads.

.15 Exhaust

.1 Exhaust shall discharge vertically for maximum dispersion modeling. Rain cap shall fully open without impeding the vertical discharge while the generator is operating.

.2 Position the exhaust point above roof level and away from air intakes.

.16 Ventilation

.1 Outside air and recirculating motorized dampers to be provided.

.17 Fuel Fill Port and Control Panel

.1 Fill level indicator panel adjacent to exterior fuel fill port. Panel to contain five (5) LED indicators (with accompanying audible indicator as noted):

.1 “FUEL LEAK” (Flashing Red, Audible w/o silence)

.2 “Low Level” (Red, Audible with silence) (50% remaining for Fire, Police, Emergency Op and 30% for all other facilities)

.3 “Tank Full” (Green) (Audible with silence)

.4 “OVERFILL” (Red) (Audible w/o silence) [Unsafe fill level due to thermal expansion]

.2 Two (2) buttons:

.1 “Silence” (acknowledges and silences clearable alarms)

.2 “Indicator Test” (momentary button activating all indicators and audible alarm)

.3 “Low Level” run times to be set by designer and manufacturer to reflect fuel consumption at maximum site design load. 12 hours for Fire, Police & Emergency Operations, and 8 hours for all other facilities.

.4 “Tank Full” level to be manufacturer set to allow for full -40°C tank expanding to +40°C without triggering “OVERFILL”.

.5 “OVERFILL” level to be manufacturer set to allow for full -40°C tank expanding to +40°C without overloading/overflowing tank.

.6 Automatic overfill prevention device to be used to comply with code. Overfill Alarm to indicate failure of this device only.

.7 Plan for fueling accessibility and spill control during fueling

.18 Annunciator

.1 Panel to be located at Service Desk or Operator’s station or as directed by City.

.2 Panel to contain three (3) LED indicators:

.1 “Generator Trouble” (Red, Audible with silence)
.2 “Generator Run” (Green, Audible with silence)
.3 “Low Fuel” (Red, Audible with silence)

.3 Two (2) buttons:

.1 “Silence Horn” (acknowledges and silences clearable alarms)

.2 “Indicator Test” (momentary button activating all indicators and audible alarm)

.19 Sub-base fuel tank

.1 Provide integral secondary containment with leak detector tied to indicators and alarms

.2 Built-in fuel gauge on sub-base tank

.3 Two fill ports sufficient to facilitate fuel conditioning

.20 Stand-alone fuel tank

.1 Provide integral secondary containment with leak detector tied to indicators and alarms

.2 Provide levelometer

.21 Load bank

.1 Cam-lok connectors for load bank test to be 400A (minimum), female and to be mounted in load bank quick connect (c/w non-conductive mounting plate) located inside generator room where clear path to outside is available. Otherwise to be located adjacent Fuel Port and Control Panel (exterior).

.2 LSI local breaker (generator) w/ shunt trip and aux. contacts for load bank connection

.3 Shall be suitable to back feed with portable backup generator

.4 Generator Power Supply for Standby Loads

.1 Provide a minimum of one receptacle in electrical and mechanical rooms connected to emergency power where a generator is installed.

.2 Power to electrically actuated washroom fixtures shall be on standby power circuits if available.

.5 Generator Power Supply for Life Safety Loads

.1 CSA 282 shall be met for all generator installations powering Life Safety (L/S) systems as per code.

.1 EXCEPTION: All police, fire, and ambulance facilities shall have C282 compliant generator installations even if not required by code for L/S system service.

.2 Generator to be installed within the facility. Where not feasible and with City approval, a climate controlled, sound attenuated, walk-in enclosure equipped with motorized louvres may be acceptable.

.3 Where systems are required by code to run past 30 minutes, concrete encasement of conductors/conduit may be permitted in place of MI cable. City to provide direction on a case by case basis.

.6 Emergency Lighting

.1 Design emergency lighting in such a way as to ensure local emergency lighting is activated when normal lighting in the area it serves is disrupted at the branch circuit level, not just when main building power or major feeders are disrupted.

.2 All battery powered emergency lighting unit equipment shall have have auto-self test with audible battery failure alarm.

.3 In all electrical and generator rooms provide battery powered emergency lighting unit equipment with a minimum 2 hour capacity or greater as required by any codes.

.7 Exit Signs

.1 Exit signs to use permanently illuminated, backlit or edgelit LEDs that illuminate the entire face (or stencil cutout when using deprecated red ‘EXIT’ signs).

.2 Any particular renovation/addition must be judged on its unique merit in terms of the implementation of new standard 'Green Running Man' signage vs. older 'Red Exit' signage. The factors will include, but not necessarily be limited to:

.1 Percentage size of new area (however *no* absolute number such as 51%)

.2 Impact on egress routes and need for clear wayfinding to building exits, eg. Only one (1) signage style permitted on any egress route.

.3 Acceptable solutions may include:

.1 Usage of older "Red Exit" signage in new areas to preserve integrity of egress route wayfinding "system" and prevent confusion when exiting (particularly in lower area percentage renovations/additions).

.2 Mixed use of older "Red Exit" and new "Green Running Man" signage (eg. situation where there is basically no crossing of exit routes and little to no connection between old and new areas; or situation where there would only be one change of signage on the way out, such as a full floor renovation or additional building wing).

.3 Retrofit of entire building to new standard "Green Running Man" signage for a consistent egress route wayfinding "system" (preferred solution when renovation and addition would be a substantial percentage, 50%+ of resultant new space, and said retrofit of old area would not result in undue cost).

.4 Any project that is remotely questionable should be submitted to the Sustainable Development Building Inspection office for AHJ review at the conceptual stage to avoid unnecessary costs due to design changes or construction change orders.

4.11.6 Communication Equipment

.1 Structured Wiring

.1 Coordinate structured wiring requirements with the City of Edmonton.

.2 Structured wiring designed to comply with *IT Infrastructure Design Guidelines*. A copy of this document can be found in Appendix B.

.3 Structured wiring design to follow latest edition of *TIA/EIA-568 – Commercial Building Telecommunication Standard.*

.2 ALD

.1 Generally to code for assembly occupancies. Induction Loop currently preferred.

.2 Contact City for speciality implementations in Libraries.

.3 Make allowances in millwork, floor, or ceiling for Induction loop at public service desk locations.

.3 DAS

.1 In large facilities investigate and allow for DAS system (BDAs, etc.) to allow for both

emergency responder and public cell data frequencies.

.2 For EPS facilities, contact the Project Officer for a list of specific requirements.

4.11.7 Motor Control

.1 General

.1 Where possible, provide motors ½ hp (0.37kW) and larger as three phase units.

.2 Where possible, provide motors larger than 1 hp (0.75kW) as three phase 600V units.

.3 Provide motors smaller than ½ hp (0.37kW) as single phase, 120V units. Usually with integrated thermal overload.

.2 Motor Protection and Control

.1 Do not use fuses for individual motor overcurrent protection.

.2 Provide single phase protection for all three phase motors either by relaying, differential overloads or BAS shutdown.

.3 Provide space on backpan for BAS current sensors.

.4 Consider harmonic contribution when designing Variable Frequency Drives and provide filtering as required.

.3 Control Wiring

.1 Coordinate control requirements with mechanical designer. Indicate control branch circuits on electrical drawings and panel schedules.

.2 Low voltage control wiring to be run in conduit or otherwise mechanically protected.

.4 Variable Frequency Drives

.1 General:

.1 VFD's, while effective for many control and energy saving system designs, should only be used if there is a positive payback and control effect not otherwise achievable by moderately sized, across the line motors.

.2 VFDs should *NOT* be used as a substitute for soft starts.

.3 For very small HVAC applications ECM motors should also be considered.

.4 Pump mounted or other equipment integrated drives with custom mountings and form factors are *NOT* acceptable.

.2 Location:

.1 Drives shall be located as proximate to motor loads as practicable and feasible.

.2 Drives shall not be located in any environmentally harsh or excessively dusty or dirty environment without extraordinarily rated enclosures and other mitigating methods.

.3 Consider maintenance implications in terms of accessibility and replacement items such as filters.

.3 Bypasses, Branch Circuit Wire Size & Over Current Protection (OCP):

.1 Bypasses are generally not supported or advisable as many variable speed applications cannot be run safely or effectively without speed control. High availability, when required, is best achieved by fully redundant n+1 drive trains including VFDs, motors, & rotating equipment (pump, fan, etc.) to best address all failure modes. In these scenarios be sure to consider adequate, if not necessarily full, system capacity in failure scenarios and also employ round-robining, swapped lead, or other methods to keep all units operationally tested and worked. If a bypass is required (eg. parkade ventilation) then all wiring, OCP, overloads, etc. shall be sized as in a standard, across the line application.

.2 When bypasses are not specified, VFD branch OCP and conductors should match and be sized as per manufacturer's recommendations or otherwise 125-175% of drive rated FLA.

.4 Branch Circuit Distribution:

.1 Distribution feeds for drives should generally not be sourced from an MCC. In a mechanical room scenario, with many drives, there should be a CDP to aggregate feeds.

.2 Supply a SPD/TVSS device at any CDP distribution and/or individually at VFDs larger than 50HP.

.5 Harmonics:

.1 Drives with DC-link, swinging style, chokes preferred for harmonic mitigation. Additionally ~1-3% input reactors are suggested for most applications (~3-5% if no DC choke). For further harmonic mitigation in a large installation, or on a large drive, a full harmonic filter, passive or active, may be advisable on the input or at panel distribution. In the fringe cases of very large drives a 12 pulse or better solution may be indicated.

.2 IEEE519 shall be met at building PCC. In new buildings this should be considered from the initial design and a tap for an active filter may be advisable. In renovation/retrofit application test before and after to ensure harmonic mitigation choices were appropriate give relative size of new harmonic load.

.6 Enclosures:

.1 VFDs shall have adequate local LCD/LED control panel and display for configuration and control. Also full BACnet connectivity required for monitoring and control.

.2 VFD component should generally be specified with integral fusing and disconnects and in a NEMA 12 enclosure.

.3 Drives and above input & output filter elements and bypasses may be neatly mounted separately or located in an integrator enclosure. All such integrator enclosures must be heat run tested at full load for 24h and not exceed manufacturer's published environmental limit for any interior components (eg. drive, filters, etc.). All enclosures shall have active, redundant fan ventilation with over-temperature and fan failure alarms. Only filter inlet ports. When an integrator supplies an enclosure with multiple components they have full design, commissioning, and warranty responsibility for the entire package.

.4 Input voltage rating +/- 10% or better of nominal. IE. 208/240V class shall be be rated

up to 264V and 600V class shall be rated up to 660V or better. In heavy duty or large motor applications 690V Class drives rated up to 759V are preferred.

.7 Motor Protection & Wiring:

.1 Output from drive/filter to all motors (or to motor starter, overload & disconnect distribution and on to motors) shall be correctly wired with drive/VFD "Teck" style cable similar to Beldan Symmetrical YC4936x series or Nexans DriveRX.

.2 All motors shall be inverter grade and explicitly rated as meeting the NEMA MG1 Part 31 standard with respect to an insulation withstand of 3.1 times or greater of the rated voltage with rise time of 0.1 microseconds.

.3 Output to motors larger than 10HP shall be via a dV/dT filter similar to MTE DVAGA or TCI V1K series. Full Sine filter might be considered if motor accessibility is very poor or in a retrofit application to non Part31 motor.

.4 Motors over 20HP should be specified with an Aegis or similar shaft grounding bushing if they are not otherwise shaft grounded by equipment connection or conductive fluid coupling.

.5 Where VFD's are mounted remotely, provide local safety disconnect at motor Local safety disconnect must be labeled in visible location with "Safety Lockout ONLY. Shutdown and disconnect VFD before switching."

.8 Acceptable Manufacturers:

.1 Drives

.1 ABB ACH500, standard commercial

.2 ABB ACS600/800, medium/heavy duty

.3 Schneider Altivar 61, standard commercial

.4 Schneider Altivar 71, heavy duty

.5 Danfoss VLT HVAC, standard commercial

.6 Emerson Commander SK, standard commercial

.7 Emerson Unidrive M, heavy duty

.2 Filters/Reactors

.1 MTE

.2 TCI

4.11.8 Miscellaneous

.1 Maintenance & Sustainable Design of Electrical Equipment & Infrastructure

.1 Common replacement components used in electrical equipment, such as lamps, ballasts, fuses and breakers, must be available through local distributors.

.2 Where possible, specify electrical equipment and systems that have local service and support with 8 hr response time.

.3 Allowances shall be made for access to electrical elements and raceway infrastructure shall be provisioned to interconnect devices, major distribution nodes, etc. Examples include spare conduit across inaccessible spaces (high ceiling, drywalled ceilings, etc.), adequate access hatches, raceway system between electrical & Datacom (NAR) rooms.

.4 Any large electrical equipment such as UPS or Transformers must be located such that a future service replacement is possible. This includes a planned path with adequate structural rating and clearances around corners and through doors. Consider required dollies and/or potential rigging.

.5 Any electrical elements such as luminaires that require a lift to service must have a clearly planned and reserved serviced corridor to bring in a lift. This includes double doors, ramps, turning radii, etc. Maximum height for lift service 9 m. Maximum height for ladder service 4 m.

.6 Any electrical elements in the vicinity of stairs, atria greater than 9 m, etc. shall be evaluated for serviceably so as not to require scaffolding, bosun's chair harnessing, specialty lifts or other extraordinary means.

.2 Electrical Service Rooms (ESR), Network Access Rooms (NAR), & Other Security or DataCom Equipment Locations

.1 To be sized as per section Service Spaces, building & electrical code(s), EPCOR and other CoE guidelines to ensure serviceability and future expansion.

.2 Collocated with mechanical or similar equipment by exception only.

.3 Environmental conditions to be maintained to suit equipment requirements and maintained under power loss conditions if equipment will continue to function.

.3 Software

.1 Software used to program, monitor, or control specified electrical equipment is to be supplied to the City. Do not specify equipment that uses proprietary software that is not made available by the vendor to the end user. This may apply to equipment such as generators, distribution equipment (MCCs), lighting control systems, fire alarm panels, etc.

.2 Specify training on all software provided.

.4 Lightning Protection:

.1 Provide lightning arrestors on all services connected to overhead lines or elements/systems otherwise deemed to be exposed plant (eg. Roof mount antennas).

.2 As a guideline, provide lightning protection for structures which are taller than adjacent structures within a 500 m radius.

.3 Lightning protection requirements depend on a multitude of building design, construction, & location factors. On all projects the design professional of record shall positively confirm the requirement or exclusion of lighting protection.

.5 Penetrations and Firestopping:

.1 Ensure adequate treatment for all envelope penetrations such as generator exhaust piping, lightning down conductors and points and service masts. Refer to Building Envelope for

specific requirements.

.2 Coordinate firestopping requirements with Architect. Ensure firestopping responsibility is clearly indicated in contract documentation. Any disturbance of existing firestopping to be repaired to current standards. Any previously deficient firestopping to be remediated to current standards.

.3 For penetrations of Datacom cabling and/or trays that are subject to repeated, frequent, operational alterations specify a reusable system.

.4 Perform non-destructive, investigative survey with radar, xray, sonar, or other appropriate means prior to any and all penetrating operations on floor slab, wall, structural member, or similar building element that may contain reinforcement or building systems susceptible to damage. This includes, but is not limited to, coring, cutting, boring, depth fastening, etc.

.6 Colour Coding Requirements:

.1 Refer to *Appendix A – Colour Coding Requirements for Mechanical and Electrical Systems* for identification symbols and colours for electrical conduit and equipment.

.7 Client Specific Requirements:

.1 While some CoE client specific requirements are noted throughout this document there are often unique demands for certain CoE business areas and associated groups. It is contingent upon the design professional to clarify and reconcile any of these elements with the Project Manager, Engineering Services, & the client group.

.2 Notable Clients with Distinctive Requirements

.1 Fire Rescue Services (FRS)

.1 SAS dispatch system.

.2 Edmonton Police Service (EPS)

.1 Security

.2 IT

.3 Radio & DAS.

.3 Libraries

.1 Security

.2 IT

.4 LRT

.1 LRT Guideline

.5 Waste

.1 Security

.2 IT

4.11.9 Commissioning

.1 The City will retain the services of a third party Commissioning Consultant to perform

commissioning of building systems. This is in addition to the services provided by the Consultant and Contractor and does not remove any responsibility from the Design Consultants or Contractors. The Design Consultant is expected to work with the Commissioning Consultant in this process and to provide required information in a timely manner. Refer to the "Commissioning Manual – Commissioning Process and Guidelines" for more information on Commissioning of City facilities.

4.12 *Energy Modelling*

4.12.1 *Energy Modelling Scope of Work/Deliverables at Different Project Stages*

.1 Pre-Design

.2 During the Conceptual or Planning phase of the project, the Building Energy Consultant will:

- .1 Assess the impact of up to three massing options presented by the architect, and provide feedback on the following metrics:
- .2 Relative energy use, broken down by end uses heating, cooling, lighting and ventilation.
- .3 Relative peak heating and cooling loads for the building and for the worst performing zones (on a W/m2 or Btu/h/sq ft basis)
- .4 Daylight potential and excessive illuminance levels (i.e. glare) in zones of interest, as determined by City and/or Architect
- .5 Renewable energy potential, as applicable from RFP
- .6 Alignment of City goals as defined in the RFP (NECB energy and GHG savings, Annual Heating Demand)

.3 To reduce the number of variables that differentiate between each iteration of the model, plug loads, ventilation rates, and schedules (occupancy, lighting, plug, fans, thermostatic setpoints) are to be kept constant between options and are to be appropriate for the building based on occupancy.

.4 If mechanical systems are known at this stage, they shall be modeled directly. However, absence of mechanical information shall not hold up this phase. In lieu of actual HVAC design parameters at conceptual design, mechanical systems are to be modeled as heating, cooling, and ventilation delivered directly to the zones (i.e. 100% OA with terminal heating and cooling). The model shall also take into account the daylighting potential of the building by directly modeling the impact of daylight sensors in applicable zones. The intent of this phase is to comment only on the impact of architecture on indicative building performance metrics.

.5 Based on the findings from the analysis conducted above, the Building Energy Consultant will work with the architect to recommend strategies around massing, location and amount of glazing, and shading to improve the outcome based on the metrics identified above. Allow for an additional round of energy modeling to assess the impact of resulting recommendations for only one of the massing options.

.6 The Building Energy Consultant shall prepare a report that clearly identifies the energy modeling strategy employed, a summary of key inputs used, a summary of results based on the above

metrics and any recommendations. Units shall be reported in kWh for electricity and GJ for natural gas, as well as an ekWh and ekWh/m2 for total energy and GHG emissions in kg/m2 as well as the annual heating demand in kWh/m2. Current utility costs shall be retrieved from the City of Edmonton's Energy Management Office. GHG emissions factors shall be derived from the City's Energy Modeling Guidelines. Please include a detailed account of the calculation for annual heating demand specifically identifying all heat sources used in the calculation and how these were extracted from the energy modelling software.

4.12.2 Schematic Design

.1 At this stage, the Building Energy Consultant will:

.1 Assess the impact of the building systems listed below, in isolation and in combination, on the following metrics:

.1 Energy use, broken down by end uses (at minimum heating, cooling, lighting, plug loads, fans, and pumps)

.2 Energy Cost, broken down by end uses and Utility (including utility rates used)

.3 Peak delivered heating and cooling for the building and for the worst performing zones

.4 City compliance metrics and targets (NECB savings, LEED v4 savings, EUI, GHG emissions)

.2 In order to report on LEED / NECB and policy C532, a baseline building(s) shall also be completed at this stage. The City would prefer NECB baselines for LEED v4 following the Canadian ACP guidance. ASHRAE baselines may be permitted if the NECB ACP path was modelled and there is the potential for additional LEED points using the ASHRAE 90.1 baseline. If the consultant is using a software that auto-generates a baseline, the appropriate modifications must be made to ensure compliance with the NECB as it applies to the Alberta Building Code and/or LEED v4.

.3 Building systems to be analyzed shall include at minimum:

.1 Window performance, based on Solar Heat Gain Coefficient, Visible Transmittance, and overall U-value (including framing)

.2 Roof performance

.3 Lighting power density ranges, as appropriate, but not less than 3 levels

.4 Up to 2 mechanical system types (ex. Air-based heating and cooling with recirculation versus 100% OA with Radiant Heating)

.5 Mechanical equipment efficiencies, including boiler efficiency, chiller and heat pump COPs, fan and pump static pressures and efficiencies, motor efficiencies, presence of heat recovery and heat recovery efficiency

.6 Impact of potential renewable energy options, as applicable in the RFP

.7 Building-type specific innovative measures (ex. Chiller heat recovery for data centre spaces or specialized refrigeration such as ice rinks or innovative dehumidification and reheat strategies in swimming pools, etc.)

.4 The inputs to be used for the analysis in this phase shall be considered by the Building Energy

Consultant based on previous experience with similar buildings and discussion and coordination with design team members, including the architect, mechanical and electrical engineers. The intent of this phase is to inform design. Therefore, this exercise is intended to be an input into developing a detailed design that addresses energy as a parameter in design considerations.

.5 For this phase, the Building Energy Consultant shall prepare a report that clearly identifies the energy modeling strategy employed, a summary of key inputs used, a summary of results based on the above metrics and any recommendations. Units shall be reported in kWh for electricity and GJ for natural gas, as well as an ekWh and ekWh/m2 for total energy and GHG emissions in kg/m2. Current utility costs shall be retrieved from the City of Edmonton's Energy Management Office. GHG emissions factors shall be derived from the City's Energy Modeling Guidelines

4.12.3 Design Development

.1 During design development, the Building Energy Consultant will review the drawings and specifications and update the model.

.2 Consultant to provide discussion on how thermal bridging through architectural details are being addressed. Any thermal bridging through architectural details to be included in energy model.

.3 The Building Energy Consultant shall update the report and notify the design team on the findings of this phase and provide an update on energy performance.

4.12.4 Working Documents - Progress Submission (also Building Permit)

.1 Building Energy Consultant to review drawings and specifications and update model and associated energy report with any changes

.2 For Building Permit, the Building Energy Consultant shall provide all documentation required by The City of Edmonton, Inspections and Permits.

4.12.5 Working Documents - Pre-Bid Submission

.1 Building Energy Consultant to review drawings and specifications and update model and associated energy report with any changes

4.12.6 Bid and Construction Documents

.1 Upon completion of final construction documents (i.e. Issued For Construction drawings and specifications), the Building Energy Consultant shall prepare an energy model for the purposes of LEED and all supporting documentation as required by the governing authority of the LEED program. The Building Energy Consultant will also respond to review comments by the governing authority to ensure successful achievement of the Energy and Atmosphere Pre-requisite 2 Minimum Energy Performance and Credit 1 Optimize Energy Performance.

.2 It is expected that the Building Energy Consultant clearly communicate to the Prime Consultant and/or the design professionals reviewing shop drawings on what criteria should be reviewed and when and how the Building Energy Consultant should be notified of any relevant changes.

.3 At the time of occupancy permit and schedule B and C submission, the energy model is to be updated with any changes that occurred during construction including any changes to equipment efficiency that occurred during the shop drawings process. The results of this model

to be used to support the City of Edmonton NECB compliance requirements.

.4 A final as-built energy model, reflecting all of the changes from the compliance model to the construction of the building shall be captured in a final energy model that may be used for post-occupancy verification of energy savings at a later date. As close as possible match this model to the actual weather, infiltration, occupancy, plug loads and thermal bridging etc. regardless of NECB requirements. Coordinate with design professionals to account for any changes to equipment efficiency during the shop drawing process. After this model is complete please update the associated report and send to City Project Manager.

.5 All reports, discussion summaries, meeting minutes, and modeling files will be provided to The City of Edmonton's Project Manager.

4.13 *Energy Modelling Guidelines*

4.13.1 Definitions

.1 Modeled Floor Area – The total floor area of the building, as reported by the energy simulation software, and generally to within 5% of the gross floor area from the architectural drawings. The floor area specifically excludes any exterior spaces and parkades.

.2 Energy Use Intensity (EUI) – The sum of all energy utilities (i.e. Electricity, natural gas, district heating) used on site by the project, divided by the Modeled Floor Area. EUI shall be reported in ekWh/m2/year.

.3 Greenhouse Gas Intensity (GHGI) – The total greenhouse gas emissions associated with the use of all energy utilities on site, according the following factors:

.4 Natural Gas: 183 g/kWh Electricity: 820 g/kWh GHGI shall be reported in kg eCO2/m2/year.

.5 Annual Heating Demand (AHD) – The amount of heating energy delivered to the project that is outputted from any and all types of heating equipment, per unit of modeled floor area. Heating equipment includes electric, gas, hot water, or DX heating coils of central air systems (ex. make-up air units, air handling units, etc.), terminal equipment (ex. baseboards, fan coils, heat pumps, reheat coils, etc.) or any other equipment used for the purposes of space conditioning and ventilation. Heating output of any heating equipment whose source of heat is not directly provided by a utility (electricity, gas or district) must still be counted towards the AHD. For example, hot water or DX heating sources that are derived from a waste heat source or a renewable energy source do not contribute to a reduction in AHD, as per the above definition.

.6 Specific examples of heating energy that are not for space conditioning and ventilation, that would not be included in the AHD, include maintaining swimming pool water temperatures, outdoor comfort heating (ex. Patio heaters), gas fired appliances (stoves, dryers), heat tracing, etc.

.7 AHD shall be reported in kWh/m2/year.

.8 Clear Field – An opaque wall or roof assembly with uniformly distributed thermal bridges, which are not practical to account for on an individual basis for U-value calculations. Examples of thermal bridging included in the Clear Field are brick ties, girts supporting cladding, and structural studs. The heat loss associated with a Clear Field assembly is represented by a U-value (heat loss per unit area).

.9 Interface Details - Thermal bridging related to the details at the intersection of building envelope assemblies and/or structural components. Interface details interrupt the uniformity of a clear field assembly and the additional heat loss associated with interface details can be accounted for by linear and point thermal transmittances (heat loss per unit length or heat loss per occurrence).

4.13.2 Acceptable Energy Modeling Software

.1 The simulation program shall meet the requirements as set out in ASHRAE 90.1-2010, G2.2.

.2 Weather File:

.1 Projects shall use the Edmonton CWEC Weather File.

.3 Unmet Hours:

.1 Annual unmet hours for any zone in the energy simulation shall be limited to 100 hours or less, with the following exception: annual cooling unmet hours are allowed, provided that it the cooling capacity has been purposely undersized according to the design intent. Unmet heating or cooling hours does not apply to zones with no heating or cooling equipment.

.4 Schedules, Internal, and DHW Loads:

.1 Schedules, occupancy densities, plug load densities for general plug loads and DHW loads shall be based on NECB values, using the space type and schedule that most closely reflect the way the building will actually operate.

.5 Other Loads:

.1 Elevators: Elevators shall be modeled by using the expected electrical draw of each elevator, both in standby and operation mode, and its frequency of use based on building type and size. There are a number of sources to assist with calculating elevator energy use, which are provided below under References.

.2 Other Process Loads: All process loads expected on the project site are to be included in the energy model. This includes but is not limited to: IT/data loads, exterior lighting, swimming pool heating, patio heaters, heat tracing, electric car charging, etc. All loads are to be estimated using good engineering practice.

.6 Ventilation Rates:

.1 Ventilation Rates to be modelled as per design, including but not limited to, ventilation for occupants according to building code requirements, make-up air for exhaust requirements.

.7 Infiltration:

.1 Infiltration for all models except for the as-built model to be as per NECB 2011.

.2 Infiltration for the as-built model shall be as below:

.3 Infiltration shall be modeled as a function of wind speed from the weather file according to the equation below. Infiltration shall be scheduled on at all times.

.4 Infil (m3/s) = 0.00025 m3/s/m2 x (0.224 x Wind Speed), Wind Speed is measured in m/s SI
Infil (cfm) = 0.05 cfm/ft2 x (0.224 x Wind Speed), Wind Speed is measured in mph IP

.5 Reduced air leakage rates to be modeled, provided the project team makes a commitment

to achieve a minimum air leakage rate, to be confirmed by air tightness testing done by Building Envelope Commissioning Authority. Credit will be allowed down to the values required by Passive House, which approximately convert to 0.00001 m3/s/m2 for use in the equation above. Air leakage testing values determined at 75 Pa can be approximately converted for use in the equation above by multiplying the value by 0.112. For example, a tested value of 0.0015 m3/s/m2 at 75 Pa would equate to 0.000168 m3/s/m2, to be used in the equation above, instead of the 0.00025 m3/s/m2 indicated.

.8 Calculating Envelope Heat Loss:

.1 One of the Policy's key performance targets is based on AHD, which is primarily a representation of the annual heating load required to offset envelope heat loss and ventilation loads. Choosing AHD as a target supports the Policy's direction to encourage energy efficient building envelopes. However, building envelope heat loss has historically been simplified due to past difficulties in cost-effectively providing more accuracy. This has generally led to overly optimistic assessments of building envelope performance by way of ignoring or underestimating the impact of thermal bridging.

.2 Typical building envelope thermal bridging elements that can have a significant impact on heat loss that have historically been underestimated or unaccounted for include: balcony slabs, cladding attachments, window wall slab by-pass and slab connection details, interior insulated assemblies with significant lateral heat flow paths such as interior insulated poured-in-place concrete or interior insulation inside of window wall or curtain wall systems, and others. With the recent addition of industry resources that support more efficient and accurate calculations of building envelope heat loss, assemblies and associated thermal bridging elements must be accurately quantified for the purposes of complying with the Policy, according the requirements below.

.9 Opaque Assemblies:

.1 The overall thermal transmittance of opaque building assemblies shall account for the heat loss of both the Clear Field performance, as well as the heat loss from Interface Details. Additional heat loss from Interface Details are to be incorporated in the modeled assembly U-values, according to the provisions below.

.2 Overall opaque assembly U-values can be determined using any of or a combination of the following approaches:

.1 Using the performance data for Clear Fields and Interface Details from the Building Envelope Thermal Bridging Guide (BETBG), and the calculation methodology as outlined in 3.4 of the BETBG. A detailed example is provided in Section 5 of the BETBG and a supporting calculation spreadsheet is available from bchydro.com/construction, titled "Enhanced thermal performance spreadsheet".

.2 Using the performance data for Clear Field and Interface Details from other reliable resources such as ASHRAE 90.1-2010, Appendix A, ISO 14683 Thermal bridges in building construction – Linear thermal transmittance – Simplified Methods and default values, with the methodology described above in a.

.3 Calculations, carried out using the data and procedures described in the ASHRAE Handbook – Fundamentals

.4 Two or three dimensional thermal modelling, or

.5 Laboratory tests performed in accordance with ASTM C 1363, “Thermal Performance of Building materials and Envelope Assemblies by Means of a Hot Box Apparatus,” using an average temperature of 24±1°C and a temperature difference of 22±1°C.

.3 Except where it can be proven to be insignificant (see below), the calculation of the overall thermal transmittance of opaque building envelope assemblies shall include the following thermal bridging effect elements:

.1 Closely spaced repetitive structural members, such as studs and joists, and of ancillary members, such as lintels, sills and plates,

.2 Major structural penetrations, such as floor slabs, beams, girders, columns, curbs or structural penetrations on roofs and ornamentation or appendages that substantially or completely penetrate the insulation layer,

.3 The interface junctions between building envelope assembles such as: roof to wall junctions and glazing to wall or roof junctions,

.4 Cladding structural attachments including shelf angles, girts, clips, fasteners and brick ties

.5 The edge of walls or floors that intersect the building enclosure that substantially or completely penetrate the insulation layer.

.4 The following items need not be taken into account in the calculation of the overall thermal transmittance of opaque building envelope assemblies:

.1 Mechanical penetrations such as pipes, ducts, equipment with through-the-wall venting, packaged terminal air conditioners or heat pumps.

.2 The impact of remaining small unaccounted for thermal bridges can be considered insignificant and ignored if the expected cumulative heat transfer though these thermal bridges is so low that the effect does not change the overall thermal transmittance of the above grade opaque building envelope by more than 10%.

.10 Fenestration and Doors:

.1 The overall thermal transmittance of fenestration and doors shall be determined in accordance with NFRC 100, “Determining Fenestration Product U-factors”, with the following limitations:

.1 The thermal transmittance for fenestration shall be based on the actual area of the windows and not the standard NRFC 100 size for the applicable product type. It is acceptable to area-weight the modeled fenestration U-value based on the relative proportions of fixed and operable windows and window sizes. It is also acceptable to simplify the calculations by assuming the worst case by using the highest window U-value for all fenestration specified on the project.

.2 If the fenestration or door product is not covered by NFRC 100, the overall thermal transmittance shall be based on calculations carried out using the pro procedures described in the ASHRAE Handbook – Fundamentals, or Laboratory tests performed in accordance with ASTM C 1363, “Thermal Performance of Building Materials and Envelope Assemblies by Means of a Hot Box Apparatus,” using an indoor air

temperature of 21±1°C and an outdoor air temperature of -18±1°C measured at the mid-height of the fenestration or door.

.11 References and Resources:

.1 2014 Building America House Simulation Protocols, NREL, 2014

.2 ASHRAE Handbook of Fundamentals, ASHRAE, 2013

.3 ASHRAE Standard 90.1-2010 – Energy Standard for Buildings Except Low-Rise Residential Buildings, ASHRAE 2010

.4 Commercial Buildings Building Envelope Thermal Bridging Guide, Version 1.1, BC Hydro, 2016

.5 Energy Modeling Guidelines and Procedures, CONMET, 2014

.6 EnergyStar Multifamily High Rise Program, Simulation Guidelines, Version 1.0, Revision 03, January 2015

.7 Infiltration Modeling Guidelines for Commercial Building Energy Analysis, PNNL, 2009

.8 National Energy Code of Canada for Buildings, NRCan, 2011

.9 New Construction Program's Energy Modelling Guideline, BC Hydro, March 2015

.10 TM54 – Evaluating

4.14 *Pool Systems and Other Water Treatment*

4.14.1 Pool systems shall be, at minimum, designed to the requirements of the following standards:

.1 Alberta Building Code, especially Part 7 and Part 2

.2 Alberta Health - Pool Standards - 2014

.3 Alberta Regulation 204/2014 - Public Health Act - Public Swimming Pools Regulation

.4 ASHRAE guidelines for pools—outdoor airflow and and air distribution designs.

4.14.2 BAS to trend all pool water systems and include historical data collection.

4.14.3 Provide a floor drain next to each bank of salt-source chlorine generators (salt cells).

4.14.4 Only single salt-source chlorine generators shall be specified. Duplex salt-source chlorine generators will not be permitted.

4.14.5 Only Wapotec high-rate sand filters shall be specified. Alternate filter recommendations must be approved by City of Edmonton Facility Engineering.

4.14.6 Ceilings in Pools are strongly discouraged. Please consult with architecture and engineering services prior to any ceiling being considered for any natatorium. If a ceiling is installed in the natatorium, Monel type hangers should be considered as an option.

4.14.7 All hangers and pipe/electrical/architectural supports in natatoriums to be galvanized or corrosion resistant.

4.14.8 Flow meters are to be electronic type with the ability to be monitored from the building management desktop system. In addition, a non-electronic flow gauge shall be installed as a

secondary flow measurement device.

4.14.9 One flow meter and turbidity meters shall be installed on the main inlet and outlet lines of the circulation system.

4.14.10 Flow meters shall be be installed on the supply line to slipstream devices such as heat exchangers and in-line chlorine generators.

4.14.11 One spare strainer basket is required for each set of strainers. A wash area is required, complete with three sides to prevent overspray, outlet for power washer, hose bib, and drain.

4.14.12 Pool pumps shall have access space for strainer maintenance and cleaning.

4.14.13 Pool basins are to be capable of being drained by gravity.

4.14.14 Pools designed for the purpose of use by small children shall be a separate pool with separate filtration, circulation, and chemical treatment systems.

4.14.15 Wave pools shall be designed to prevent waves from pushing bathers into obstructions.

4.14.16 Pool tanks to have a continuous service and pipe space around each tank. The service space shall be full height and at least 2 m wide with ventilation, lighting, drainage, and convenience power outlets.

4.14.17 Locate all elbows and tees in the service space.

4.14.18 Sand and other similar permanent filter media systems shall have a turbidity meter installed on the backwash effluent pipe.

4.14.19 Each backwash effluent pipe shall have a 600 mm linear section of transparent pipe for the purpose of confirming when backwash is complete.

4.14.20 Surge tanks should be easily accessible from the mechanical rooms and conform to confined space regulations. Access to surge tanks shall not be directly from the deck.

4.14.21 Control systems for oxidation reduction potential, pH, and other chemical treatment systems, shall be connected to, and provide information to, the building management desktop system.

4.14.22 Gutters and Surge:

.1 Deck-level gutters to be designed to hold 100% of the instantaneous maximum surge.

.2 Drainage pipe directly connected to the gutter shall have uniform size throughout length of gutter.

.3 Gutter grates to be oriented parallel with the pool basin walls

.4 Pool edge of the gutter shall use coved tile to form a lip with bullnose tile spaced throughout the perimeter of the basin.

.5 Pool filtration circulation surface collection shall be achieved by perimeter overflow. Where a perimeter overflow system is not practicable, skimmers will be acceptable, subject to review by City of Edmonton Facility Engineering.

.6 Circulation shall be designed such that 100% of the circulated water returning to the filtration equipment, based on the design flow rate, is accomplished by surface perimeter overflow.

4.14.23 Acoustics design shall be done by an acoustics engineer for all natatoriums.

4.14.24 At the design development phase, coordinate and show all main piping and equipment, including pumps, filters, surge tank, chemical treatment, and pool inlets and outlets.

4.14.25 Pool circulation shall employ bottom inlets, not side inlets. If side inlets are proposed instead of bottom inlets, this matter is to be discussed with Facility Engineering.

4.14.26 Underwater lighting shall only be specified and installed in pool depths of more than 2 m.

4.14.27 Pool membrane should be run over the pool edge, under the perimeter drain, and onto a portion of the deck.

4.14.28 Chlorine Rooms:

.1 The following codes and guidelines shall be followed and applied in the design of gaseous chlorine rooms. All the requirements and suggestions contained therein shall be applied to all chlorine room designs.

.1 Alberta Building Code - 7.2.3.41 to 7.2.3.45, inclusively

.2 Alberta Fire Code

.3 Alberta Occupational Health and Safety Act, Regulation, and Code

.4 Work Safe BC - Chlorine Safe Work Practices

.5 Work Safe Alberta

.6 Building Code Interpretation 06-BCI-003 (September 2007)

.2 The chlorine room door shall have a sign clearly labelled “Danger — Chlorine”.

4.14.29 Ozone Generators:

.1 An emergency electrical shut-off switch must be located an appropriate distance from the ozone room. This allows for manual shut-off of the generator power during a leak or malfunction, and avoids a worker having to enter a room.

4.15 *Arenas*

4.15.1 General

.1 During upgrades or replacements, ensure that current program requirements of facility will be met.

.2 Replacing units one-for-one is not acceptable if the facility has extended the seasonal duration that ice is in place (i.e. earlier in the fall, later in the spring, or has ice year round.)

.3 A Class T mechanical room is required to house refrigeration plant and must be designed accordingly.

.4 Mechanical room and condenser unit sump require a drain that can be isolated from the building sanitary system so that in the event of a release the contaminated room/sump can be washed down and the water disposed of properly.

.5 All equipment must be accessible for maintenance.

.6 The City preference is to locate the brine header in a header trench.

.7 The door to the refrigeration mechanical room housing equipment that contains ammonia shall be labeled “Danger — Ammonia”.

.8 The door to the refrigeration mechanical room housing equipment that contains refrigerant shall be labeled “Danger — Refrigerant”.

4.15.2 Refrigeration System

.1 The ice plant and the HVAC building cooling must be independent systems.

.2 The City prefers anhydrous ammonia as the refrigerant with low charge capacity and calcium chloride or environmentally friendly propylene glycol as the secondary coolant. Ethylene glycol is not to be used.

.3 The City preference is for Armstrong pumps to be utilized in brine circulation to ensure compatibility with city standby pump.

.4 Include VFD on brine pump

.5 Ensure that a filter is included on the brine system.

.6 The preferred compressor is the Mycom ‘M’ Series reciprocating compressor.

.7 If screw compressors are required, select with a maximum of 1800 RPM

.8 Plate and frame heat exchangers are preferred over shell and tube.

.9 Follow manufacturer's service clearance recommendations but allow at a minimum 1m service clearance on all sides of the compressor.

.10 Specify cooled condensers / cooling towers to be able to run without water when the outside air temperature is below 2 degrees Celsius.

.11 The City preference is for closed circuit cooling towers with glycol as the working fluid, over evaporative condensers.,

.12 Use plate and frame heat exchanger to capture heat from the condenser loop.

.13 For any equipment that requires relief provide a dual relief valve assembly.

.14 On systems where refrigerant volumes are low enough (Ammonia DX plate and frame systems), route the refrigerant relief valve into the cooling tower remote sump

.15 Manual fire-line dump valve to be installed regardless of refrigerant charge

.16 Ensure adequate headspace on second level of skid package.

.17 Ensure adequate protection of electrical equipment from leaks on second level of skid package. (i.e. provide covers over electrical panels, provide liquid tight NEMA Class 4).

.18 Provide drainage pipe to collect glycol from seal leaks and take it down from second level.

.19 Service switches must be operable without the use of keys or wrenches.

.20 Provide a jib crane to lift motors.

4.15.3 Dehumidification

.1 Preference for dehumidification is to use desiccant electric dehumidifiers as opposed to gas fired units.

.2 The preferred suppliers of dehumidifiers are Munters and CDI

.3 For large facilities a rooftop dehumidifier may be utilized, but the preference is for units hung in the dehumidified space.

4.15.4 Controls

.1 Do not allow proprietary controls for the refrigeration system. Refer to consultant manual controls section for approved controls systems / contractors.

.2 The City must be able to modulate all control valves via DDC (eg. for setting brine temperature).

.3 Provide remote reading capability for the operation of the plant

.4 Ensure that DDC system has full electromechanical backup with DDC / Off / Local setting. Include safety and operating switches for high pressure, low pressure, oil failure

.5 Ensure redundancy in brine temperature sensing including return temperature sensors, slab temperature sensors, and infrared sensors.

4.15.5 Ice Resurfacer Requirements

.1 Ice resurfacer to be fueled by compressed Natural gas

.2 Ice resurfacer water supply must have the capacity to fill the resurfacer up to twice per hour (based on a twin arena).

4.15.6 Heating

.1 Radiant tube heaters (Superior brand preferred) are the preferred method of heating in the spectator areas.

.2 Ensure heaters face away from the ice.

4.15.7 Gas Detection

.1 Refer to the City of Edmonton Guidelines for Gas Detection.

APPENDIX A - COLOUR CODING REQUIREMENTS FOR MECHANICAL AND ELECTRICAL SYSTEMS

1. Mechanical Piping

1.1. Banding

1.1.1. Red – to indicate extremely hazardous material

1.1.2. Orange – to indicate mildly hazardous material

1.1.3. Blue – to indicate non-hazardous material

1.2. Pipe Lines

1.2.1. Pipelines are to be colour-coded as indicated in Table B-1.

Table B-1, Mechanical Piping Colour Coding Requirements

Type	Piping Colour	Banding Colour	Banding Description	Piping Description
Steam	Yellow	Red	For steam pressures over 130 kPa	Note pressure with symbol (eg. 1030 kPa Steam)
		Orange	All other steam pressures	
Heating Water	Yellow	Red	For heating water over 120ºC	Note temperature with symbol (eg. 150ºC Heat Wat.)
		Orange	All other heating water	
Cold Water	Light Blue	None		
Potable Water	Light Blue	None		Incl. softened water
Other Waters and Water Solutions	Green	Red	For waters over 120ºC or if chemical content is extremely hazardous	Incl. domestic hot, condensate, boiler feed, de-mineralized, chilled, cooling water, glycol, chemical feed solutions
		Orange	For waters 60ºC to 120ºC or if chemical content is mildly hazardous (eg. boiler lines, chromate treated water)	
		Blue	For waters below 60ºC or if chemical content is non-hazardous (eg. brine lines)	
Natural Gas	Yellow	None		Note pressure with symbol (eg. 70 kPa Nat. Gas)
Gases (excluding Air and Nat. Gas)	Orange	Blue	Inert Gases (eg. nitrogen)	Note pressure with symbol
Oil	Brown	Red	Not used	

		Orange	On light oils (eg. fuel oil)	
		Blue	On normal lubricating oils	
Fire Protection	Red	None		
Air	White	None		Note pressure with symbol (eg. 860 kPa Air)
Vent, Drain, Blowdown, Vacuum, Exhaust	Aluminum	Red	Lines that contain extremely hazardous material	
		Orange	Used if line is hot (boiler blowdown) or mildly hazardous	
		Blue	Not required (eg. no bands on vacuum lines)	
Strong Acid or Strong Caustic	Purple	Red	All bands to be red	
Refrigerant	Grey	Red	Group 3 refrigerants as defined in CSA Standard B52	
		Orange	Group 2 refrigerants as defined in CSA Standard B52 (ammonia, sulphur dioxide)	
		Blue	Group 1 refrigerants as defined in CSA Standard B52 (Freon, CO2)	

2. *Electrical Equipment*

2.1. All pull boxes, junction boxes, covers, and conduit fittings shall be enamel finished in the colour indicated in Table B-2. All cover markings to be in black lettering.

2.2. All switchgear, distribution centers, panelboards, motor control centers, motor starter cabinets, motor control cabinets, disconnect switches, contactor cabinets, relay cabinets, transformers, termination cabinets, splitter boxes, bus duct, cable duct, etc are to be colour coded as indicated in Table B-2.

Table B-2, Electrical Colour Coding Requirements

System	Description	Conduit Banding/ Colour Coding	Cover Marking
Distribution	High Voltage (>750V)	Orange (RAL 2011)	
	347/600V Distribution	Sand (RAL 1001)	
	277/480V Distribution	Maroon (RAL 3011)	
	230/400V Distribution	Cream (RAL 9001)	
	120/208V Distribution	Grey (RAL 7001)	
	Emergency Power Systems	As Per Voltage + Black Striping	"EM"
	Isolated Ground Systems	As Per Voltage + Orange Striping	“IG”
	Solar PV DC Power (various Voltage)	Gold (RAL 1003)	
Fire and Emergency	Fire Alarm and Fire Phone	Red (RAL 3001)	“FA”
Security	Card Access	Yellow (RAL 1003)	"CA"
	Electrical Door Lock System	Yellow (RAL 1003)	
	Security Control Systems	Yellow (RAL 1003)	
Communication	Audio Visual TV Systems	Green (RAL 6032)	"AVTV"
	Computer and Data Systems	Blue (RAL 5005)	"C"
	Intercom Systems	Yellow (RAL 1003)	"I"
	Telephone System	Blue (RAL 5005)	"T"
	Television Distribution	Green (RAL 6032)	"TV"
Miscellaneous	Low Voltage Control for Lighting	Black (RAL 9004)	
	Lighting LV DC Power (<50V)	Lt Blue (RAL 5012)	

APPENDIX B - IT INFRASTRUCTURE DESIGN GUIDELINES

1. General

1.1 Overview

.1 This document is intended to guide the consultant when designing the structured wiring and associated infrastructure for a new building, building addition, or building renovation for the City of Edmonton.

.2 These guidelines are to be used in conjunction with building program requirements to design the IT infrastructure to meet the needs of the facility.

.3 The technical information contained in this document is to be used as a guide only. The consultant is expected to follow his or her professional judgment as well as all applicable codes and regulations. Building projects may have specific requirements that supersede material presented in this document. When a deviation from these guidelines is either required or requested by the consultant or the City, it is to be documented in writing.

.4 Prior to the Design Development phase, a meeting with the City of Edmonton Project Manager and City IT Design Advisor will be arranged to discuss the IT design. For projects with minimal IT requirements, email or telephone correspondence may be adequate, at the discretion of the City.

1.2 References

.1 Design is to comply with the latest adopted edition of all applicable codes and standards, including the Alberta Building Code, Canadian Electrical Code, and this guideline.

.2 ANSI/TIA/EIA-568-C.1 Commercial Building Telecommunications Cabling Standard Part 1: General Requirements

.3 ANSI/TIA/EIA-568-C.2 Commercial Building Telecommunications Cabling Standard Part 2: Balanced Twisted-Pair Cabling Components

.4 ANSI/TIA/EIA-568-C.3 Commercial Building Telecommunications Cabling Standard Part 3: Optical Fiber Cabling Components Standard

.5 ANSI/TIA/EIA-569 Commercial Building Telecommunications Pathways and Spaces

.6 ANSI/TIA/EIA-606 Administration Standard for the Telecommunications Infrastructure of Commercial Buildings

.7 ANSI/TIA/EIA-607 Commercial Building Grounding and Bonding Requirements for Telecommunications

1.3 Responsibilities of the City of Edmonton

.1 Provide these guidelines and building program requirements to the Prime Consultant prior to the start of design.

.2 Supply, install and configure client IT equipment, such as hubs, switches and routers in Network Access Rooms (NAR).

.3 Commission the overall IT system. This does not include performance testing of the structured wiring and terminations.

.4 The assigned City of Edmonton Project Manager will be the primary point of contact, and will facilitate communication between the Prime Consultant and City Information Technology personnel, as required.

1.4 Responsibilities of the Prime Consultant

.1 Design the IT infrastructure and structured wiring system to ensure all program requirements are met. This includes:

.1 Identifying all locations where structured wiring is to be run, based on program and building requirements.
.2 Locating Network Access Room(s).
.3 Laying-out and coordinating equipment within Network Access Room(s), including equipment racks and backboards, ensuring adequate space for identified City-supplied equipment.
.4 Specifying required connections to other building systems. This may include mechanical/BAS systems, security equipment, etc.

.2 Coordinate required communication services to the building. Coordinate with City of Edmonton IT Design Advisor, through the Project Manager, to ensure the building is on the City-wide IT network and also to confirm requirements. Connection requirements will vary from site to site depending on various factors such as facility capacity, function, growth and service ability.

.3 Prepare the IT infrastructure drawings and specifications. Refer to article 1.4 - Submission Requirements.

.4 Attend construction meetings, inspect installations and perform contract administration relating to the IT infrastructure.

1.5 Submission Requirements:

.1 The consultant is responsible for preparing all drawings and specifications necessary to convey the entire scope of the IT infrastructure to bidding contractors.

.2 All progress review submissions are to include information on the IT infrastructure system.

.3 Provide in the Design Development submission a preliminary structured wiring riser diagram that clearly demonstrates all major components and their interrelation. Also provide preliminary plan layouts of the Network Access Room(s) showing all major equipment, as well as a site utility service plan indicating the type and proposed route of the communication service(s) to the building.

.4 Subsequent submissions are to indicate the locations of all end devices, and refine the details, diagrams and plans presented in previous submissions. Provide elevations for equipment installed in Network Access Rooms (NARs), including backboards and free-standing racks. Drawings are intended to clearly convey the complete scope of the work.

.5 Where possible, provide a separate drawing for low tension system plans and details.

.6 If a submission is not sufficiently detailed to review, it will be returned for resubmission.

.7 Provide required specification sections for the structured wiring system and IT infrastructure. This may include communication services, structured wiring (horizontal, backbone, etc), patch panels & racks, conduit and cable tray. Specifications are to include:

.8 System description, clearly indicating the contractor's scope of responsibility.

.9 Submittal information, including shop drawing requirements and information required for the Operation & Maintenance manual.

.10 Product specifications, including approved manufacturers and products.

.11 Installation requirements.

.12 Structured wiring testing requirements and procedures.

2. Technical

2.1 Utility Services

.1 Determine what communication services are required for the building, based on program requirements and consultations with City IT Networking. The building may require service connections for telephone, television, City network, Supernet, emergency communications and remote monitoring of building systems such as fire alarm, security, CCTV, or BAS. Connection requirements will vary from site to site depending on various factors such as facility capacity, function, growth and service availability.

.2 Consult with the Project Manager and City IT Network Analyst to determine the necessity of providing a fiber service to the site. The supply of a fiber service will be based on the requirements of the building user and the cost to supply and maintain the service.

.1 Consult with the City to determine if it is feasible for a City-owned fiber service to be brought to the project site. Typically, the provision of a new City-owned fiber service will be a separate project. Coordinate with that project to ensure appropriate infrastructure, such as service conduit to the site boundary, is provided.

.2 If a City-owned fiber service is not available or cost-effective to supply, determine through consultation with the utility provider if a managed fiber service is available. Coordinate with the utility provider to ensure appropriate infrastructure, such as service conduit to the utility pedestal, is provided.

.3 For sites connected to the City network or with security and/or CCTV equipment, present or future, it is the recommendation of this guideline to provide a fiber service, where economically viable.

.4 When a fiber service is not installed, consider providing an empty conduit to the property line to facilitate a future fiber service. Indicate pull-box locations on long runs, and where conduit changes direction, as required.

.3 Many installations may require a limited number of analog phone lines for emergency phones and the fire alarm dialer. Determine requirements through consultation with the Project Manager and indicate required equipment and backboard configuration on drawings.

.4 All incoming service conductors are to be terminated in a rack-mounted patch panel in the main Network Access Room.

.5 All required utility services are to be identified no later than the Design Development submission. A site plan showing the location of the utility service box(es) and the preliminary route of the underground service conductors to the main incoming service room should be

included with the submission.

2.2 Horizontal and Backbone Cabling

.1 For horizontal cabling, specify 4-pair Category 6 UTP (blue) for all data and voice cables between patch panels and end devices. All components to meet the technical performance requirements for Cat 6 installation. Cabling shall have end to end Cat 6 products and shall be of one manufacturer. Cable length (Ethernet over UTP) is not to exceed 90m including patch cables.

.2 For data backbone cabling, specify multi-strand single-mode fiber optic cable, terminated in a 24 port rack at each end using LC connectors. Determine number of strands based on design requirements.

.3 Provide two (2) Cat 6 cables to each identified workstation.

.4 Network cabling to be terminated with a standard network jack compatible with industry standard keystones for mounting such as Hubbell HXJ6. Jacks to be installed into an unloaded patch panel that accepts industry standard keystone mounted jacks such as Hubbell UDX24E

.5 Specify cabling suited for the environment it is being installed in. This may include areas with extreme temperatures, high humidity, excessive “noise”/RF interference, etc. Where possible, avoid extreme environments.

.6 Cables are to be specified as ULC rated for risers or plenums where appropriate.

.7 All cables are to be uniquely labeled indicating cable origin. Ensure cable labeling standards are included in the specifications. A copy of the City labeling standard is included as an appendix to this document.

.8 Consult with City IT Design Advisor, through Project Manager, should an alternate cable type be required or recommended for a specific application.

.9 Under no circumstances are horizontal or backbone cable runs to be spliced between origin and destination.

.10 All cabling communications lines, copper or fiber optic must be terminated on patch panels mounted to the rack.

2.3 Horizontal Cabling Raceways

.1 Do not run horizontal cabling and backbone cabling in the same conduit.

.2 Do not run communication and power cables in close proximity to each other. In no circumstances are they to be run in the same conduit or non-barriered cable tray

.3 Structured wiring in walls is to be run in minimum 21mm conduit to ceiling.

.4 Structured wiring may be run in conduit or cable tray (basket or ladder types acceptable) in ceiling space as appropriate. For accessible ceiling areas (T-Bar), branch distribution from tray to individual rooms may be supported by J-hook with permission from the Project Manager. In no circumstances are structured wiring cables allowed to be laid directly on a building surface such as on a T-bar ceiling.

.5 Size conduit and cable tray on drawings to ensure maximum fill allowance is not exceeded.

2.4 Existing Data Cable Installation

.1 All redundant materials to be removed from ceiling space including conduit, boxes, cables and patch cables.

.2 Existing cables may be relocated and/or reconnected as required for renovations and expansions; however, inspection and recertification of reused data lines is required.

2.5 Network Access Rooms (NARs)

.1 All horizontal cabling from end devices throughout the facility is to be run to the nearest NAR and terminated in patch panels located in free-standing racks. Backbone cabling is to be run between NARs and terminated in patch panels.

.2 NARs are to be located throughout the facility to ensure maximum allowable run lengths of horizontal cabling are not exceeded. Where possible, locate NAR rooms near locations with a high density of IT equipment to minimize the amount of structured wiring cable run throughout the facility.

.3 In multi-level buildings, provide a NAR on each storey, where possible.

.4 In facilities with multiple NARs, connect racks in a star topology, where each NAR is directly connected via backbone cabling to the main NAR (typically where the service conductors are terminated). Where this is impractical due to physical or cost limitations, remote NARs may be connected to the nearest NAR where backbone cables can be “jumpered” to connect to the main NAR.

.5 Minimum size 1800mm x 4800mm.

.6 Backboards and equipment required for items such as service terminations, analog telephone equipment, fire alarm panels, etc are to be located in NAR rooms.

.7 Confirm with the Project Manager before locating security and CCTV equipment in the NAR. Be aware that the Video Surveillance recording equipment (Head-end) must be located in a separate rack than other IT equipment. This rack must be housed in a secure cabinet that requires more space than the equipment described in this guideline. Cables associated with Video Surveillance are to run to the closest IT network rack.

.8 Do not locate power and distribution equipment such as distribution panels or motor control centers in NAR rooms without the approval of the Project Manager. This will only be allowed on small installations with minimal IT requirements.

.9 In buildings with electronic security, NARs are to be secured with card access control to restrict access and monitor usage. Where electronic security is not provided, discuss alternate forms of security such as a lock or keypunch with the Project Manager.

.10 Equipment in NARs:

.1 Racks are to be free-standing 19” type (steel) without cable management guides, equipment mounting rails fabricated, drilled and tapped for No. 10-32 screws, with provision to attach grounding and designed to accept EIA standard 483 mm (19”) wide panels. Provide minimum 915mm clearance on front, back and one side of all floor-mounted racks,

remaining side requires minimum 610mm clearance.

.2 Wall-mount racks may be approved by the Project Manager for small installations with minimal IT requirements where there is insufficient space for a floor-mounted rack. Close coupled racks are permitted. In such instances, a horizontal basket cable tray must be installed across the top of the close coupled racks.

.3 Patch panels are to be 24 or 48 port, designed for Category 6 RJ-45 jacks.

.4 Horizontal and vertical cable management and all patch cords will be provided by the City.

.5 Rack-mount equipment other than patch panels, such as network switches, will be provided by the City. Ensure adequate space is available in racks for City-supplied equipment.

.6 Provide 1.0 m working clearance in front of all backboards.

.11 Racks are to be free-standing 19” type (steel) without cable management guides, equipment mounting rails fabricated, drilled and tapped for No. 10-32 screws, with provision to attach grounding and designed to accept EIA standard 483 mm (19”) wide panels. Provide minimum 915mm clearance on front, back and one side of all floor-mounted racks, remaining side requires minimum 610mm clearance.

.12 Wall-mount racks may be approved by the Project Manager for small installations with minimal IT requirements where there is insufficient space for a floor-mounted rack. Close coupled racks are permitted. In such instances, a horizontal basket cable tray must be installed across the top of the close coupled racks.

.13 Patch panels are to be 24 or 48 port, designed for Category 6 RJ-45 jacks.

.14 Horizontal and vertical cable management and all patch cords will be provided by the City.

.15 Rack-mount equipment other than patch panels, such as network switches, will be provided by the City. Ensure adequate space is available in racks for City-supplied equipment.

.16 Provide 1.0 m working clearance in front of all backboards.

.17 Indicate all grounding and bonding for equipment installed in NARs, including incoming conduit and cable tray. Cable trays to be continuously grounded. Show on elevation drawing(s) discussed in *Section 1.5 – Submission Requirements*.

.18 The NAR must be adequately lit and be subject to standard interior environmental conditions. Provide HVAC services as required to ensure environment maintains optimum operating requirements for the equipment housed therein.

.19 Provide a minimum of two dedicated circuit 208/240V, 30A L6-30R “Twist lock” receptacles to serve each rack. Provide a minimum of two dedicated circuit 120V, 20A 5-20R “T-Slot” duplex receptacles to serve each rack. Consult with City IT Design Advisor to ensure additional receptacles are not required. Receptacles are to be mounted on the wall directly behind the rack. Provide one dedicated circuit 120V, 20A 5-20R “T-Slot” duplex receptacle on the bottom right corner of each backboard. Refer to City of Edmonton Security Guidelines for additional requirements for security backboards.

2.6 WiFi (Internal Wireless Access)

.1 Consult with the Project Manager and City IT Network Analyst to determine the WiFi

requirements.

.2 Access Point (AP) equipment will be provided by the City. AP map will be generated by the City using Consultant provided floorplans.

.3 Provide one (1) Cat 6 cable to each identified WAP location. Cable to run from patch panel in NAR to AP location. Provide minimum 3m of excess cable with female termination connector neatly coiled in ceiling space at AP location. Cable to be clearly labeled at rack and at AP location (eg. AP1 …etc.) along with tag on the ceiling T-bar, tile or connection box to identify the AP location.

2.7 Telephone and Fax Equipment

.1 Most new installations in the City will utilize Voice Over Internet Protocol (VOIP) technology for telephone services. Confirm with the Project Manager prior to commencing design. Consultation with IT Network Analyst required for all VOIP systems to determine requirements.

.1 There is no requirement for backboard or rack space to mount VOIP telephone equipment, as this equipment is server based and located off-site.

.2 In a building using VOIP technology, fax equipment does not require an independent analog phone line. The City IT department will install a fax analog to digital converter in the NAR room for each fax station identified on the drawings. This converter allows faxes to utilize the VOIP system.

.3 Emergency phones and auto-dialers are to be identified on drawings and must be connected to an analog service. This equipment must remain operational during a power interruption and therefore cannot be serviced by the VOIP system.

.4 All cabling to be Cat 6. Specify appropriate terminations for structured wiring identified for VOIP (data) and analog (voice) telephones.

.5 For renovations and additions to existing buildings with analog phone systems, provide minimum Category 5e voice cabling to all identified new analog phone locations. Provide additional backboard space in NARs as necessary to accommodate voice backbone terminations and telephone equipment.

2.8 Inspection, Testing, Commissioning and Training

.1 The consultant is responsible for inspection of the IT infrastructure installation and is to issue contemplated changes or instructions to the Project Manager as required, during construction.

.2 Ensure the specification indicates the contractor’s responsibility to do performance testing of the horizontal and backbone cables and terminations to ensure they meet minimum industry-defined performance criteria and certified. Describe testing procedures and submittal requirements in the specification. Review submissions and performance tests to ensure the installed system meets all requirements.

.1 Certification Testing of Final Installation using ANSI/TIA/EIA-568 Series compliant, UL verified Class IIe, III, or IV field certification instruments are required for testing the Category rated copper infrastructure. The installation must be tested in accordance with approved certification procedures as detailed in ANSI/TIA/EIA-568 Series standards and the

Telecommunications Distribution Methods Manual.

.2 All fibre optic installations to be certified must be tested with optical loss test sets (power meters or field testers), capable of reporting Insertion Loss and Length, or an appropriate OTDR capable of reporting link loss measurements. These test results will be submitted with a link loss budget corresponding to the installation.

.3 Testing to be completed on 100% of all installed copper and fiber optic Links and Channels that comprise both the horizontal and backbone portions of the structured cabling system. An exception is made for factory pre-terminated copper and fiber optic cable assemblies.

.3 After the project has been granted substantial completion and is handed over to the City for occupancy, the City will install all client-supplied IT equipment.

.4 The City will conduct training on the IT system, where required.

2.9 Warranty

.1 Installer must supply an end to end 15 year manufacturer warranty covering all passive copper and fiber optic connectivity products including connectors, patch panels, pre-terminated cable assemblies, patch cords, equipment cords, and enclosures. Includes associated replacement parts and labour.

2.10 Labeling Standard

.1 General

.1 This section details labeling standards for library, police, and all other types of City buildings.

.2 Ensure the applicable labeling standard is clearly described in the construction specifications.

.3 Cables serving VOIP telephones are data cables, not voice cables, and should be labeled accordingly.

.4 Network patch panels and wall plates to be mechanically labeled.

2.11 Edmonton Public Library IT Labeling Standard

.1 The following labeling standard is to be used when working on a library building:

TF-RRR-P

where: T = type (D or V)

F = floor

RRR = three digit room number

P = port letter (NOT number)

Examples: V3-101-A, D3-101-A, D3-101-B

2.12 Edmonton Police Service IT Labeling Standard

.1 This standard will be added in a future edition of this document. When writing specification, confirm labeling requirements with Project Manager.

2.13 City of Edmonton IT Labeling Standard

.1 For all other building types, the following labeling standard is to be used:

AT-PP

where: A = NAR Room identifier. This is not required in buildings with only one NAR.

T = type. This will always be “D”. No labels to be labeled “V”

PP = cable number

Examples: D-01, D-02, 2D-01

APPENDIX C - SECURITY AND CARD ACCESS SYSTEM DESIGN GUIDELINES

1 GENERAL

1.1 *Overview*

.1 This guideline is to be used in conjunction with project program requirements to design a security system that meets the needs of the facility and is compatible with the City of Edmonton's requirements.

.2 For the purposes of this guideline, the term 'Security System' refers to the access control and intrusion detection system, inclusive of card access and motion sensors.

1.2 *References*

.1 *"Safety Audit Guide for Crime Prevention"*, City of Edmonton, Jan 2000. This document can be found on the City of Edmonton website.

.2 CSA C22.1, Canadian Electrical Code, Part 1

1.3 *Responsibilities of the Prime Consultant*

.1 Incorporate the requirements described in the Functional Security Program, provided by the City's Project Manager, using a combination of electronic and non-electronic security measures. Incorporate Crime Prevention through Environmental Design (CPTED) principles in design. Consider security when determining site layout, sightlines, interior & exterior lighting, landscaping, program relationships, etc. Effective security design will seek to minimize the amount of electronic security devices needed through the use of intelligent design.

.2 Where electronic security equipment is used:

.1 Specify and locate all detection and access control equipment such as control panels, motion sensors, glass break sensors, card readers, etc.

.2 Specify connections between security equipment and other building systems requiring audible and remote alarm annunciation. This includes ensuring an appropriate communication service is provided.

.3 Coordinate security design across disciplines, including architecture, door hardware, and electrical.

.4 Prepare the security system drawings and specifications, and perform contract administration relating to the security system.

1.4 *Submission Requirements:*

.1 All progress review submissions are to include security information.

.1 Refer to the Professional Service Agreement and the latest edition of "Consultant Manual Volume 1, Design Process and Guidelines" for a complete list of submission requirements.

.2 If a submission is not sufficiently detailed to review, it will be returned for resubmission.

.2 Standard security drawing details and a Security Specification Template are included in the appendices to this guideline. These documents do not account for all possible scenarios, and are provided for reference only. It is the responsibility of the Consultant to make modifications and add new details or information as necessary to accurately convey project requirements.

2 TECHNICAL

2.1 *General*

.1 Security System Selection:

.1 The City of Edmonton uses two types of security systems, selected based on specific project requirements. Refer to the table below and consult with the City to determine the appropriate system for your project:

System	Card Access & Intrusion Detection (C-Cure)	Intrusion Detection (Honeywell ADEMCO)
Arming:	Pre-Programmed or Manual	Manual
Max # of intrusion devices:	See Section 2.3	128 (Typical)
Communication Service:	IP Network with CoE Domain	POTS
Cost:	Higher	Lower
Product:	See Section 2.3	See Section 2.2

.2 Field Device Input/Output Point Allocation:

.1 Refer to Cable Schedule table on drawing E06 for the number of points required on a security panel for typical field devices. This information is not dependant on the type of security system selected.

.3 Communication Service and Alarm Annunciation:

.1 All security systems are to be remotely monitored for status and building alarms at the City's central monitoring station.

.2 Provide CoE Domain using IP Ethernet Networks using the following media types:

.1 Fiber – City Owned or Leased.

.2 Copper – Managed ADSL or POTS

.3 Depending on program requirements, building alarms such as mechanical alarms and generator status may be annunciated through the security system.

.4 Do not remotely annunciate fire alarms through the security system. Provide a separate fire alarm dialer, compliant with City requirements. Refer to Fire Alarm Communication Design Guidelines in Appendix F for additional information.

2.2 *Intrusion Detection Systems (Non-Card Access)*

.1 This section discusses intrusion detection systems where card access is not required. Refer to the next section when designing a security system requiring card access.

.2 Intrusion detection systems are to be one of the following approved products:

.1 Honeywell Ademco Vista (model 128 BPT or higher) or approved equal.

.3 When designing an intrusion alarm system without card-readers:

.1 Design to accommodate 25% future expansion. If more than one panel is required, use a C-Cure IStar System.

.2 Connect to communication service for remote alarm annunciation. A dedicated copper analog telephone service is preferred, CoE approval required for any alternative.

.3 Refer to manufacturer documentation when choosing a product and designing the system.

.4 Intrusion detection alarm panels are to be installed in a secure location, on a plywood backboard.

.5 Provide two(2) individual dedicated 15A/120V circuits(emergency circuits are preferred when available) to panel and to duplex receptacle (located adjacent to each intrusion detection alarm panel).

.6 Refer to the Non-Card Access Security Specification Template, and manufacturer's guidelines.

2.3 *Card Access Security Systems (C-Cure 9000/IStar)*

*VERSION OF SOFTWARE HOUSE SOFTWARE (9000) TO BE CONFIRMED WITH COE.

.1 Card Access Security Systems are to be C-Cure 9000/IStar-based, and have strict design and installation requirements, described in this guideline. Refer to the previous section when designing an intrusion detection system without card access.

.2 Contractor must be "C-Cure 9000 system installer/maintainer with IStar" certified by Software House to purchase, install and program C-Cure 9000 components. Ensure the specification clearly identifies this requirement.

.3 There are two types of control panel approved for use in a C-Cure 9000 compatible security system installed in a City of Edmonton building, IStar Ultra, and IStar Edge. These panels may both be used in the same building, as required. Consider the following criteria when determining the type, number, and location of IStar security control panels:

.1 Number of field devices:

.1 The following table indicates the maximum number of field devices one security control panel can accommodate. Design to accommodate 25% future expansion, or as directed by the Project Manager. Add additional panels as required.

	# of Readers per ACM	**# of Inputs per ACM**	**# of Outputs per ACM**
iStar Ultra	8	24 expandable to 128	16 expandable to 128
iStar Edge	2 expandable to 4	8 expandable to 64	4 expandable to 64

.2 Additional marshalling locations may be distributed throughout larger facilities to collect wiring from remote field devices, reducing the quantity and size of wire and conduit run in the facility. Refer to the Appendix for a typical marshalling backboard detail. For larger

facilities card access panels should be placed strategically to limit the distance to readers.

.3 IStar Edge control panels may be used where a small number of devices are clustered at a remote location, such as a parking lot gate or a small out-building.

.2 Identified intrusion zones:

.1 Assign a different intrusion zone to each area (area's must be clearly defined):

.1 Where intrusion devices and/or card readers are armed and/or disarmed manually with an arming reader.

.2 Where intrusion devices and/or card readers are armed and disarmed on a preprogrammed schedule, or remain armed at all times. Assign different zones to areas that are armed and disarmed on different schedules.

.3 <u>All devices on a single zone are to run to the same IStar panel.</u> One panel may serve devices from multiple zones.

.4 Card access doors that are programmed on-site by building staff must be run to a separate panel. For example, this commonly happens for team change rooms in a sports facility, where a team manager will be assigned a card to access the change rooms for a limited time.

.4 Communication between security control panels:

.1 At each security backboard location, provide two(2) structured wiring cable (Cat 6 minimum) with certified terminations between each IStar control panel and a network patch panel or ADSL box. Panels communicate on CoE Network.

.2 Additionally, provide one(1) spare structured wiring cable at each security backboard location to facilitate local programming with a laptop.

.5 Security Room & Backboards

.1 The security backboard must be adequately lit and be subject to standard interior environmental conditions.

.2 At each security panel location, specify:

.1 A 1219 mm x 2438 mm x 19 mm plywood backboard, dedicated for security equipment. Allow for an 1829 mm x 2438 mm x 19 mm plywood backboard in locations with two security control panels. Plywood to be painted fire retardant grey or equivalent pre manufactured fire rated plywood board.

.2 A 1219 mm wide x 303 mm high x 203 mm deep gutter box with 19mm internal plywood, hinged down and lockable, to collect wiring to and from field devices. All conduits must enter gutter box to the rear (ie. close to backboard).

.3 IStar control panel(s), relay cabinet, power supplies, duplex receptacle and batteries, as required. The relay cabinet contains the output relay boards, additional input & output cards (if required), surge suppressing power bar, and structured wiring connections.

.4 Provide two(2) individual dedicated 15A/120V circuits(emergency circuits are preferred when available) for panel and to duplex receptacle (located adjacent to each intrusion detection alarm panel).

.3 Refer to the Card Access Security Specification Template, included as an appendix to this document.

2.4 *Wire and Conduit*

.1 Install a separate conduit system for all security system components. All security wiring is to be run in conduit.

.2 Do not run power and low tension/communication wiring in the same conduit.

.3 Conduit is to be concealed where possible. Where conduit is exposed, it is to be installed on the secure side of the wall.

.4 Conduit home-runs to the security backboard are to be minimum 21 mm.

.5 Provide an individual wire home-run from each field device to the security backboard. Do not splice wiring between the field device and security backboard.

.6 All wires are to be mechanically labeled with the unique field device number at both ends.

.7 Typical wire types and sizes are indicated in the standard details, included as an appendix to this document. Increase wire size as necessary for distant devices.

2.5 *Field Devices*

.1 General

.1 For product information and installation requirements for typical field devices, refer to the Security Specification Template, included as an appendix to this document,

.2 Where possible, locate all devices where they can be easily accessed for maintenance (Maximum height of 2500 mm from finished grade).

.3 All security field devices must be powered from the security control panel. Most existing installations and all new installations are 12VDC. When working on an existing building, consult with the City to determine if the building has 24VDC devices.

.4 All powered door hardware components (eg. retractable panic bars, delayed egress) must be powered from a separate power supply. On secured doors & gates with electric door hardware, specify a relay, powered from the security control panel, to disable the powered door exterior actuator button while secured.

.5 Indicate each field device's intrusion zone adjacent to its symbol on the drawing(s). Provide an intrusion zone schedule on the drawing(s) indicating the area protected, arming method (manual, scheduled, always-armed), and that zone's security panel location.

.2 Card Readers

.1 Install card readers where access is limited to authorized personnel or where the City has identified a requirement to log door use for auditing purposes. Refer to the functional security program and consult with the Project Manager to determine if it may be appropriate to use alternate forms of access control, such as locks & keys or punch-codes.

.2 Consider the application when specifying card reader type. One reader type may not be suitable for all locations.

.1 Specify readers designed to operate in the intended environment. This may include outdoors, extreme temperatures, condensation/frost, and wet, dirty or hazardous environments.

.2 Provide long read range readers for applications where the user may be further from the reader, such as parking garage entries. Consult with the City prior to specifying long read range readers.

.3 Ensure specified readers are able to physically mount where required. Specify flush mount (preferred), surface mount or mullion mount as required.

.3 Refer to accessibility guidelines for recommended mounting heights for barrier-free entrances.

.4 Flush mount device box where possible. For surface installations, use a weatherproof device box.

.5 Specify card readers compatible with the C-Cure 9000/IStar system. Refer to the Security Specification Template, included as an appendix to this document, for further information.

.6 Where possible, limit cable distance between card readers and security control panel to 125 meters. If distance exceeds 125 meters, specify a RM4 module to be installed within 3 m of door the reader, in an accessible location. This module extends the allowable cable distance between the reader and security panel. Refer to the drawing detail in the appendix for further information.

.3 Arming Readers and Keypads

.1 For facilities using a C-Cure 9000/IStar system, Software House RM2-LPH readers are required for zones that will be armed or disarmed manually.

.2 For facilities using an non-card access intrusion system, a keypad is required to arm and disarm the system and must be installed inside.

.3 Locate arming readers and keypads at location(s) where staff will be arming the system or intrusion zone, preferably inside the building.

.4 Request to Exit Sensors and Door Release Buttons

.1 Install request to exit (RTE) sensors at all card-reader doors that have intrusion detection (ie. door contacts) to disable the contact while exiting from the secured side.

.2 Install door-release pushbuttons as an alternative to an RTE when using magnetic locks.

.5 Door and Window Contacts

.1 Install contacts in all doors entering an intrusion zone.

.2 Contacts may be required in operable windows entering an intrusion zone, depending on the project requirements.

.3 Where possible, conceal contact and wiring in door/window frame.

.4 On double doors, contacts at each door may be wired in series and therefore only use one input point per pair at the security control panel.

.5 On sliding doors, monitor the door open and break away status with a door position switch.

.6 Motion Sensors and Glass-Break Sensors

.1 Select the appropriate form of detection based on the environmental and physical limitations of the space.

.1 Install glass-break sensors where occupants may be present while the system is armed and in areas that are prone to nuisance alarms.

.2 Locate sensors to minimize the quantity needed. If not obvious on the drawings, indicate the area to be covered to facilitate calibration by the contractor.

.3 Mount sensors as per the manufacturer's specifications. Sensors must remain accessible for maintenance.

.7 Electric Door Strikes

.1 Electric door strikes are the preferred method for electronically securing card-access doors.

.2 Coordinate electric door strikes with automatic door operators to ensure attempted unauthorized operation of the automatic door does not damage the door motor.

.3 Electric door strikes are to fail-secure, except where fail-safe strikes are required to satisfy building code and safety requirements.

.4 Electric door strikes are to be 12VDC and powered from the relay panel at the security backboard. Do not power strikes directly from the IStar security panel outputs unless it is PTC or fused protected.

.8 Magnetic Locks

.1 To be used by explicit exemption only, please contact CoE Engineering Services for approval.

.9 Sirens and Signaling Equipment

.1 Most facilities require an audible alert to annunciate security alarms within the facility, in addition to remote annunciation to a monitoring facility.

.2 Sound level (dB) is to be designed appropriate to the application.

.3 Signaling equipment is to be 12VDC and powered from the relay panel at the security backboard.

.10 LED Indicators

.1 Use LED indicators when it is required to have visual indication that an intrusion zone is armed.

2.6 *Programming, Testing and Training*

.1 Card Access Security System (C-Cure 9000/IStar)

.1 To facilitate programming, the security drawings and/or specifications are to indicate all intrusion zones and arming methods. Zone/room naming methodology to be submitted to CoE for approval prior to start of programming.

.2 System to be ULC Certified.

.3 Contractor to provide CoE with defaulted installer code, verification reports and as-builts.

.4 Refer to the Security Specification Template, included as an appendix to this document, for

typical testing and training requirements.

.2 Intrusion Detection Systems (No Card Access)

.1 Installation and programming must be completed by Company on contract with City as C-Cure 9000 system installer/maintainer with IStar, certified by Software House to purchase, install and program C-Cure 9000 components. City to provide contact information for Company on contract.

.2 Contractor to install and program system. To facilitate programming, the security drawings and/or specifications are to indicate all intrusion zones and arming methods. Zone/room naming methodology to be submitted to CoE for approval prior to start of programming.

.3 Contractor to provide CoE with defaulted installer code, verification reports and as-builts.

.4 System to be ULC Certified.

2.7 *Design & Specifications*

.1 Standard Security Drawings and specification templates, for card and non-card access scenarios, are available from Engineering Services. Request most current version from CoE project manager.

APPENDIX C1 - STANDARD SECURITY DRAWINGS

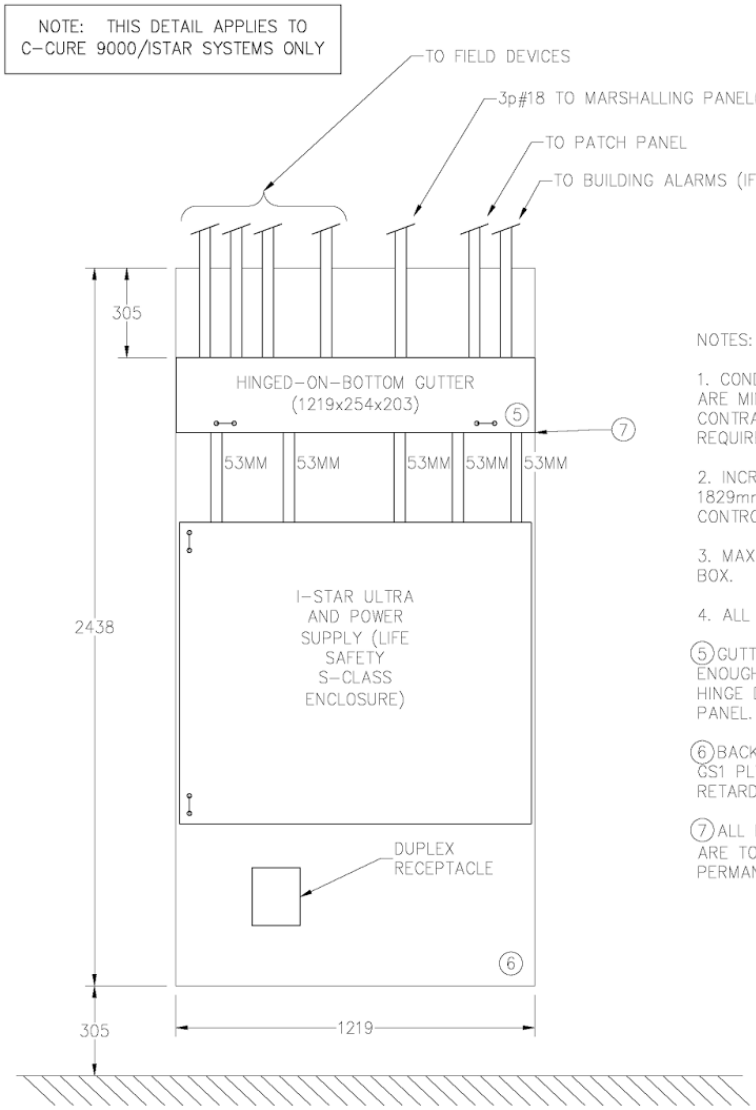

NOTES:

1. CONDUIT LOCATION AND SIZES SHOWN ARE MINIMUM REQUIREMENTS. CONTRACTOR MAY ADD CONDUIT AS REQUIRED.

2. INCREASE BACKBOARD WIDTH TO 1829mm WHEN MORE THAN ONE SECURITY CONTROL PANEL IS REQUIRED.

3. MAX 2133 mm TO TOP OF GUTTER BOX.

4. ALL DIMENSIONS IN MILLIMETERS.

5 GUTTER BOX TO BE LOCKABLE. LEAVE ENOUGH ROOM TO HAVE GUTTER COVER HINGE DOWN AND NOT INTERFERE WITH PANEL.

6 BACKBOARD TO BE 1219x2438x19mm GS1 PLYWOOD PAINTED IN FIRE RETARDANT GREY PAINT.

7 ALL PANELS, BOXES, AND CONDUITS ARE TO BE PROPERLY LABELED W/ A PERMANENT LAMACOID OR SS TAG.

CAD File: SECURITY_STD_20171025_V2.0.DWG

THE CITY OF Edmonton FACILITY LANDSCAPE & INFRASTRUCTURE	project: SECURITY SYSTEM DESIGN GUIDELINES	scale: N.T.S.
		drawn by KW date 10/17
		checked by RP date 10/17
	drawing title: SECURITY BACKBOARD WITH ISTAR ULTRA (TYPICAL)	reviewed by RP date 10/17
		Cad file name: SECURITY_STD_20171025_V2.0.DWG
		drawing no. E01 sheet no. 1 of 6
		project no. N/A

NOTE: THIS DETAIL APPLIES TO C-CURE 9000/ISTAR SYSTEMS ONLY

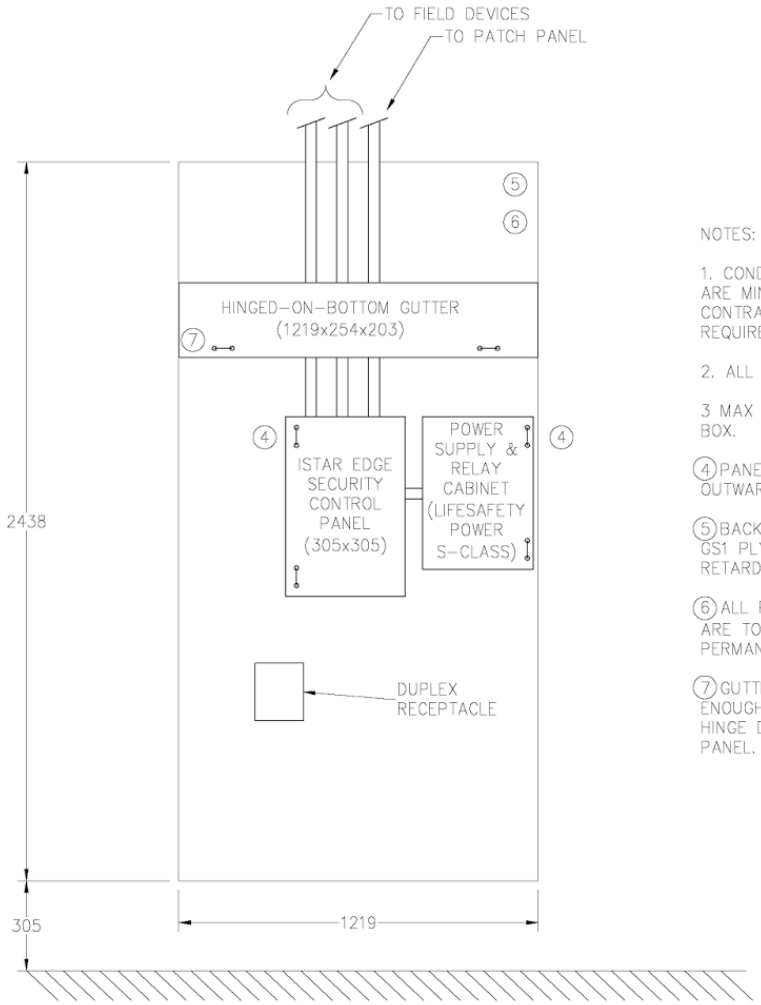

NOTES:

1. CONDUIT LOCATION AND SIZES SHOWN ARE MINIMUM REQUIREMENTS. CONTRACTOR MAY ADD CONDUIT AS REQUIRED.

2. ALL DIMENSIONS IN MILLIMETERS.

3 MAX 2133 mm TO TOP OF GUTTER BOX.

(4) PANELS TO BE HINGED AND OPEN OUTWARD AWAY FROM EACH OTHER.

(5) BACKBOARD TO BE 1219x2438x19mm GS1 PLYWOOD PAINTED IN FIRE RETARDANT GREY.

(6) ALL PANELS, BOXES, AND CONDUITS ARE TO BE PROPERLY LABELED W/ A PERMANENT LAMACOID OR SS TAG.

(7) GUTTER BOX TO BE LOCKABLE. LEAVE ENOUGH ROOM TO HAVE GUTTER COVER HINGE DOWN AND NOT INTERFERE WITH PANEL.

CAD File: SECURITY_STD_20171025_V2.0.DWG

THE CITY OF Edmonton FACILITY LANDSCAPE & INFRASTRUCTURE

project: SECURITY SYSTEM DESIGN GUIDELINES

drawing title: SECURITY BACKBOARD WITH ISTAR EDGE (TYPICAL)

scale	N.T.S.
drawn by / date	KW 10/17
checked by / date	RP 10/17
reviewed by / date	RP 10/17
drawing no.	E02
sheet no.	2 of 6
project no.	N/A
Cad file name:	SECURITY_STD_20171025_V2.0.DWG

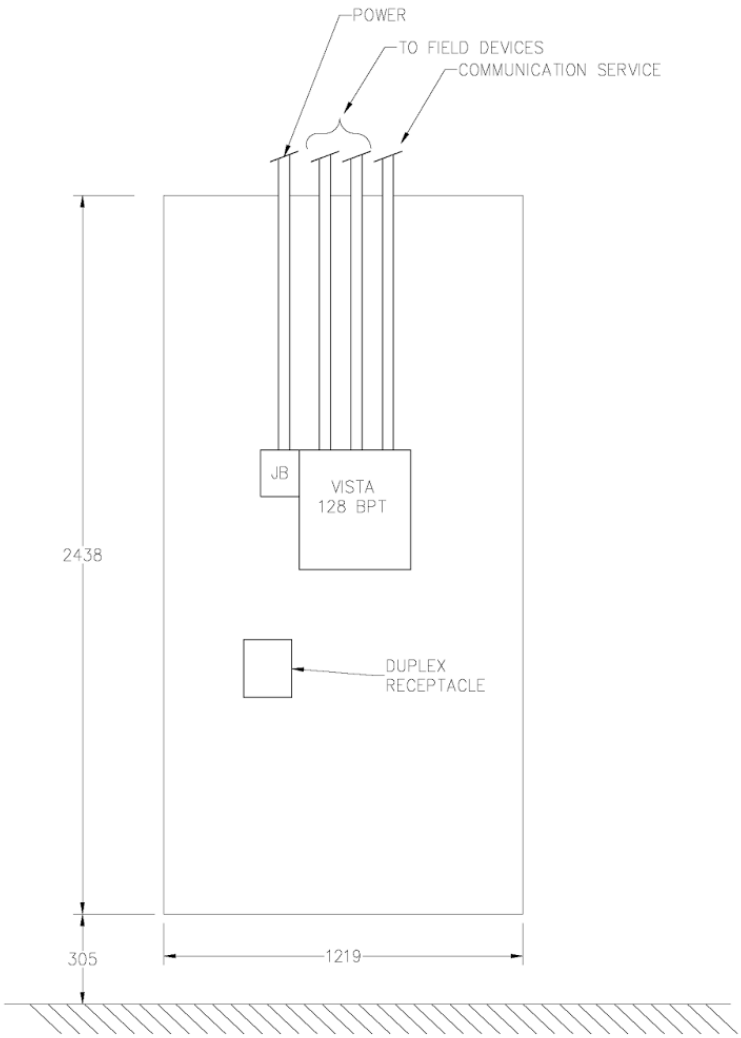

CAD File: SECURITY_STD_20171025_V2.0.DWG

THE CITY OF Edmonton FACILITY LANDSCAPE & INFRASTRUCTURE

project: SECURITY SYSTEM DESIGN GUIDELINES

drawing title: SECURITY BACKBOARD WITH ADEMCO PANEL (TYPICAL)

scale: N.T.S.

drawn by KW date 10/17

checked by RP date 10/17

reviewed by RP date 10/17

drawing no. E03

sheet no. 3 of 6

project no. N/A

Cad file name: SECURITY_STD_20171025_V2.0.DWG

NOTE: THIS DETAIL APPLIES TO C-CURE 9000/ISTAR SYSTEMS ONLY

COMPOSITE CABLE WITH OVERALL JACKET MAY BE USED FOR CABLE LENGTHS UNDER 250'

INDIVIDUAL CABLES OR EXTENDED COMPOSITE CABLE FOR CABLE LENGTHS OVER 250' TO A MAX OF 500'

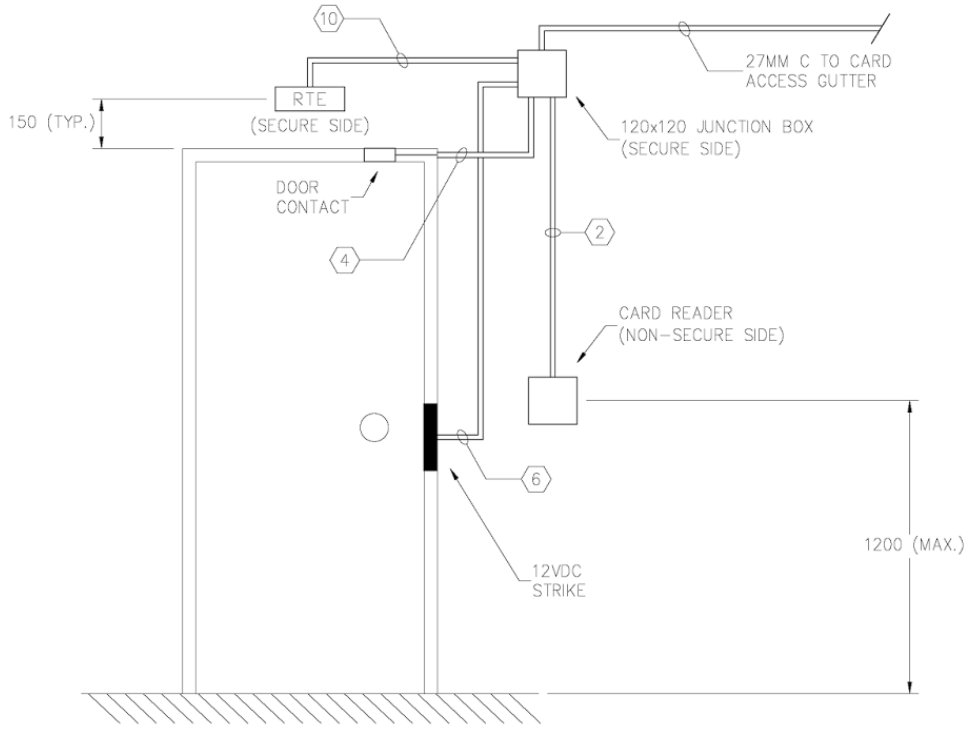

NOTES:

1. DRAWING SHOWS TYPICAL NON-POWERED DOOR, SECURED WITH AN ELECTRIC STRIKE. MODIFY TO SUIT SPECIFIC CONDITIONS, INDICATING ANY ADDITIONAL REQUIREMENTS, DIMENSIONS/MOUNTING HEIGHTS, ETC.

2. TYPICAL OPERATION:

ENTRY: WHEN A VALID CARD IS SWIPED, DOOR CONTACT IS DISABLED FOR A SHORT TIME, AND STRIKE IS RELEASED, ALLOWING USER TO PUSH OPEN DOOR.

EXIT: USER MANUALLY OPERATES DOOR HARDWARE TO OPEN DOOR WHILE THE REQUEST-TO-EXIT SENSOR TELLS THE SECURITY PANEL TO DISABLE THE DOOR CONTACT FOR A SHORT TIME, ALLOWING USER TO PASS THROUGH DOOR WITHOUT SETTING OFF AN INTRUSION ALARM.

CAD File: SECURITY_STD_20171025_V2.0.DWG

THE CITY OF Edmonton FACILITY LANDSCAPE & INFRASTRUCTURE	project: SECURITY SYSTEM DESIGN GUIDELINES	scale: N.T.S.
		drawn by KW date 10/17
		checked by RP date 10/17
	drawing title: CARD ACCESS DOOR WITHOUT POWERED HARDWARE (TYPICAL)	reviewed by RP date 10/17
		drawing no. E04 sheet no. 4 of 6
		project no. N/A
		Cad file name: SECURITY_STD_20171025_V2.0.DWG

NOTE: THIS DETAIL APPLIES TO C-CURE 9000/ISTAR SYSTEMS ONLY

COMPOSITE CABLE WITH OVERALL JACKET MAY BE USED FOR CABLE LENGTHS UNDER 250'

INDIVIDUAL CABLES OR EXTENDED COMPOSITE CABLE FOR CABLE LENGTHS OVER 250' TO A MAX OF 500'

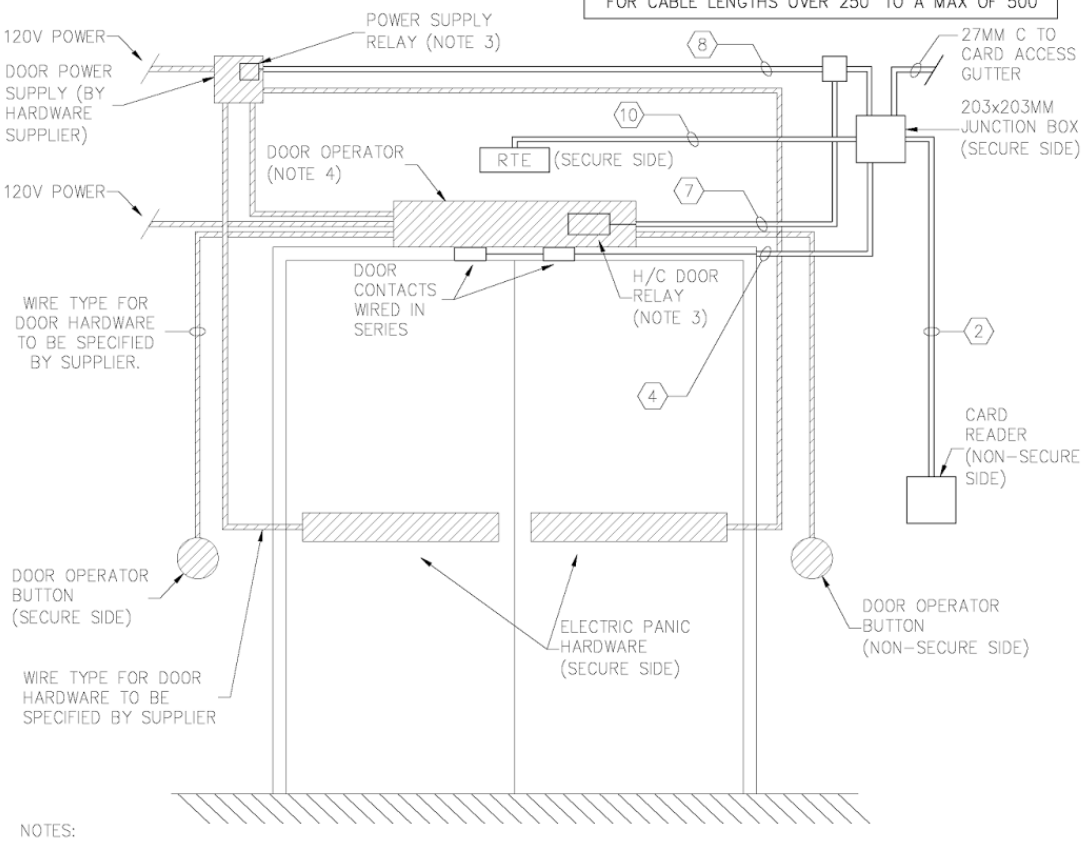

NOTES:

1. THIS DRAWING AND OPERATION DESCRIPTION BELOW IS ONE OF MANY POSSIBLE POWERED DOOR AND GATE CONFIGURATIONS AND IS SHOWN ONLY TO ILLUSTRATE HOW TYPICAL POWERED DOOR HARDWARE COMPONENTS MAY INTERACT WITH SECURITY EQUIPMENT. PROVIDE A SEPARATE DETAIL FOR EACH UNIQUE TYPE OF POWERED DOOR THAT HAS SECURITY.

2. HATCHED AREAS DENOTE TYPICAL POWERED DOOR HARDWARE EQUIPMENT. UNHATCHED AREAS DENOTE TYPICAL SECURITY EQUIPMENT.

3. TYPICAL OPERATION:

ENTRY: WHEN A VALID CARD IS SWIPED, DOOR CONTACTS ARE DISABLED FOR A SHORT TIME, AND A SIGNAL IS SENT FROM THE SECURITY PANEL TO A 12VDC RELAY IN THE DOOR POWER SUPPLY TO RELEASE THE STRIKES. A SIGNAL IS ALSO SENT TO ANOTHER 12VDC RELAY IN THE DOOR OPERATOR TO ENABLE THE NON-SECURE SIDE DOOR OPERATOR BUTTON. THE DOOR MAY THEN BE OPENED MANUALLY USING THE DOOR HARDWARE, OR AUTOMATICALLY BY PRESSING THE DOOR OPERATOR BUTTON.

EXIT: USER MANUALLY OPERATES PANIC HARDWARE OR PRESSES DOOR OPERATOR BUTTON TO ACTIVATE STRIKES AND OPEN DOOR WHILE THE REQUEST-TO-EXIT SENSOR TELLS THE SECURITY PANEL TO DISABLE THE DOOR CONTACTS FOR A SHORT TIME, ALLOWING USER TO PASS THROUGH DOOR WITHOUT SETTING OFF AN INTRUSION ALARM.

CAD File: SECURITY_STD_20171025_V2.0.DWG

THE CITY OF Edmonton FACILITY LANDSCAPE & INFRASTRUCTURE	project: SECURITY SYSTEM DESIGN GUIDELINES	scale: N.T.S.
		drawn by KW date 10/17
		checked by RP date 10/17
	drawing title: CARD ACCESS DOOR WITH POWERED HARDWARE (TYPICAL)	reviewed by RP date 10/17
		drawing no. E05 sheet no. 5 of 6
		project no. N/A
		Cad file name: SECURITY_STD_20171025_V2.0.DWG

CAD File: SECURITY_STD_20171025_V2.0.DWG

No.	DEVICE	TYPE	NO. OF POINTS	NOTES	CABLE
1	DOOR	CARD READER		CARD ACCESS SYSTEMS ONLY	COMPOSITE ACCESS CONTROL CABLE** OVERALL JACKETED. SEE DOOR INPUTS/OUTPUTS
2	CARD READER NON-SECURE SIDE	CARD READER	DIRECT WIEGAND	CARD ACCESS SYSTEMS ONLY	UNDER 76 m (250') 39 STP #22 AWG SHIELDED FROM COMPOSITE CABLE** OVER 250'-3P STP #18 INDIVIDUALLY SHIELDED
3	ARMING CARD READER RM2-LPH	CARD READER	RS485 PORT	CARD ACCESS SYSTEMS ONLY	3P STP #18 AWG SHIELDED
4	DOOR CONTACT CARD READER DOOR	DOOR INPUT	1	CARD ACCESS SYSTEMS ONLY	1P #18 AWG FROM COMPOSITE CABLE**
5	DOOR CONTACT NON CARD READER DOOR	DOOR INPUT	1	DOUBLE DOORS CAN BE WIRED IN SERIES 1 PT PER 2 DOORS	4C #18 AWG STRANDED
6	ELECTRIC STRIKE	DOOR OUTPUT	1	CARD ACCESS SYSTEMS ONLY	UNDER 76 m (250')-1P #18 AWG SHIELDED FROM COMPOSITE CABLE** OVER 76 m (250')-1P #16 AWG SHIELDED
7	BARRIER FREE DOOR H/C BYPASS RELAY	OUTPUT	1	CARD ACCESS SYSTEMS ONLY	1P #18 AWG SHIELDED
8	DOOR CONTROL RELAY	OUTPUT	1	CARD ACCESS SYSTEMS ONLY	1P #18 AWG SHIELDED FROM COMPOSITE CABLE**
9	SLIDING DOOR SOLENOID	DOOR OUTPUT	1	CARD ACCESS SYSTEMS ONLY	1P #18 AWG SHIELDED FROM COMPOSITE CABLE**
10	REQUEST TO EXIT	INPUT	1	CARD ACCESS SYSTEM ONLY	2P #18 AWG FROM COMPOSITE CABLE
11	SIREN	OUTPUT	1		2C #18 AWG SHIELDED STRANDED
12	STROBE	OUTPUT	1		4C #18 AWG SHIELDED STRANDED
13	SIREN STROBE COMBO	OUTPUT	1		ONE (1) 4C #18 AWG STRANDED
14	LED INDICATOR	OUTPUT	1		ONE (1) 2C #18 AWG STRANDED
15	KEYPAD	NON READER			6C #22 AWG STRANDED
16	WINDOW CONTACT	INPUT	1		4C #22 AWG STRANDED
17	GLASS BREAK DETECTOR	INPUT	2	1 ALARM POINT, 1 TAMPER POINT	6C #22 AWG STRANDED
18	MOTION DETECTOR	INPUT	2	1 ALARM POINT, 1 TAMPER POINT	6C #22 AWG STRANDED
19	LOW TEMP SENSOR	INPUT	1	1 ALARM POINT	4C #22 AWG STRANDED
20	PANIC BUTTON	INPUT	1	1 ALARM POINT	4C #22 AWG STRANDED
21	WIRELESS PANIC RECEIVER	INPUT	1	1 ALARM POINT	6C #22 AWG STRANDED
22	BMS ALARM MONITORING	INPUT	1	1 ALARM POINT	4C #22 AWG STRANDED
23	WATER SENSOR	INPUT	1	1 ALARM POINT	ONE (1) 4C #22 AWG STRANDED

*CONDUITS TO BE SIZED AT 40% FILL TO ALLOW FOR EXPANSION. MIN. SIZE = 21MM C.
**BELDEN AXIS CONTROL CABLE OR APPROVED EQUAL

THE CITY OF Edmonton FACILITY LANDSCAPE & INFRASTRUCTURE

project: SECURITY SYSTEM DESIGN GUIDELINES

drawing title: CABLE SCHEDULE (TYPICAL)

scale: N.T.S.

drawn by KW date 10/17
checked by RP date 10/17
reviewed by RP date 10/17

drawing no. E06
sheet no. 6 of 6
project no. N/A

Cad file name: SECURITY_STD_20171025_V2.0.DWG

APPENDIX C2 - SECURITY SPECIFICATIONS TEMPLATE
CARD ACCESS
(SPEC SECTION 28 13 00)

1. General

1.01 Related Sections

.1 Section 08 71 00 – Door Hardware – General.

.2 Section 14 21 23 – Elevators.

.3 Section 26 05 21 – Wires and Cables.

1.02 System Description

.1 Security System: Control access to building and selected areas and detect unauthorized movement within building using card access readers, motion sensors, and glass-break sensors.

.1 Selected Exterior Doors: Control access into [and out of] building.

.2 Selected Building Areas: Control access into [mechanical room,] [electrical room,] [IT room,] [staff area,] [cash handling room/safe,] [_____].

.3 Selected Building Areas: Detect unauthorized access in [exterior offices,] [hallways,] [_____].

.4 System Arming: By [arming reader].

.5 Refer to the Intrusion Zone Schedule on drawings.

.6 Signaling: By local siren(s) and remote annunciation to City monitoring facility.

.2 Security Access System is to be fully compatible with the CCure 9000 security management system.

1.03 Submittals

.1 Refer to Section 01 33 00: Submittal Procedures.

.2 Product Data: Provide electrical characteristics and connection requirements.

.3 Shop Drawings: Provide system wiring diagram showing each device and wiring connection required.

.4 Security system submittals are to be coordinated with Door Hardware submittals, specified in Section [_____.]

1.04 Closeout Submittals

.1 Refer to Section 01 78 10: Closeout Submittals.

.2 Test Reports: Indicate satisfactory completion of required tests and inspections.

.3 Record Documents: Record actual locations of Security equipment. Record field device number designation.

1.05 Quality Assurance

.1 Installer Qualifications: Certified to purchase, install and program CCure 9000 systems and components. To also include any site specific requirements(Example: Police clearance).

2. *Products*

2.01 Manufacturers

.1 All products must be compatible with the CCure 9000 security management system.

2.02 Control Panels

.1 Software House IStar Ultra with two ACM's:

- .1 16 card readers.
- .2 48 supervised inputs, expandable to 256.
- .3 32 form C relay outputs, expandable to 256.
- .4 2 GB memory.
- .5 Battery backup power supply: Life Safety c/w one 12V 7AH battery.
- .6 Local ethernet port.
- .7 Support static IP addressing.
- .8 Panel Tamper.
- .9 Alternate products will not be accepted.

.2 Software House IStar Edge:

- .1 2 card readers.
- .2 8 supervised inputs, expandable to 32.
- .3 4 form C relay outputs, expandable to 32.
- .4 64 MB memory.
- .5 Battery backup power supply: Life Safety c/w one 12V 7AH battery.
- .6 One Ethernet port, optional power-over-ethernet module.
- .7 Panel Tamper
- .8 Alternate products will not be accepted.

.3 Powered Relay Boards:

- .1 Isolating relays for security device outputs, such as door strikes.
- .2 8 fused outputs, configurable to NO or NC.
- .3 LED relay indicators.
- .4 Fire Alarm disconnect feature, where required.(Example: Maglocks - Fire Alarm requires interconnect contact to open doors)
- .5 Auxiliary contact for monitoring of disconnect feature with LED indicator for arm/disarming.

.4 Terminal Blocks:

.1 Double-stack type, DIN rail mounted, with screw terminations.

.2 Phoenix 3044102 (Gry), use for inputs connections

.3 Phoenix 3045101(Org), use for positive (+12VDC) connections

.4 Phoenix 3045156 (Grn), use for negative(-12 VDC) connections

.5 Phoenix 3030213 (Red Jumper)

.6 Power Supply (door control):

.1 115VAC input(typical), 12VDC 20A output(typical).Coordinate ULC approved device with Door Hardware prior to supply/install.

.2 Filtered and electronically regulated outputs.

.3 Short circuit and thermal overload protection.

.4 Battery backup: One 12VDC 7AH Batteries

.5 LED indication of AC input and DC output.

.6 Class 2 limited fused or PTC outputs.

2.03 Input Devices

.1 Card Readers

.1 Multiclass SE type.

.2 Transmit frequency: 125 kHz.

.3 Read range: [63.5mm (2.5”) - 76mm (3”)]

.4 LED indicator light and beeper.

.5 Operating Voltage: 5-12VDC.

.6 Color: [black].

.7 Enclosure/housing: Polycarbonate.

.8 Mounting: Flush, surface, or mullion as indicated on drawings.(For vehicles, please contact CoE Corporate Security)

.9 Communication: Weigand compatible.

.10 HID RP40SE/RP15SE or approved equal.

.11 Software House RM2L-4000 Multiclass Arming Readers: Where indicated on drawings.

.2 Request-to-Exit Sensors

.1 Two Form C outputs.

.2 Adjustable relay time of 0.5s to 60s.

.3 Swivel optics for aiming.

.4 12VDC I/P voltage.

.5 Color: [White] [Black].

.6 Honeywell IS310 or approved equal.

.3 Door and Window Contacts

.1 Closed loop type.

.2 Wide gap 19 mm (3/4”) or 23 mm (7/8”) diameter recessed mount: GE 1078C or approved equal.

.3 Surface mount: GRI 29AWGW or approved equal.

.4 Overhead door rail mount: Sentrol SR-2325AL or approved equal.

.5 Overhead door floor mount: Amseco AS-ODC-59A or approved equal.

.4 Motion Sensors

.1 Dual technology: PIR, Microwave.

.2 Form C output.

.3 Cover tamper.

.4 Animal immunity.

.5 Fluorescent light interference filter.

.6 12VDC I/P voltage.

.7 Optics for long, medium or curtain applications, as required.

.8 Bosch ISC-CDL-W15G or approved equal.

.5 Glass Break Sensors

.1 Form C output.

.2 Cover tamper.

.3 Omni-directional microphone.

.4 RF Immunity.

.5 12VDC I/P voltage.

.6 GE Shatter Pro3 5815NT or approved equal.

.6 Panic Alarm

.1 Closed loop type.

.2 12VDC I/P voltage.

.3 Sentrol 3045 (w/ panic switch) or approved equal.

.7 Intercom

.1 Please contact CoE Corporate Security for information.

2.04 Output Devices

.1 Electric Door Strikes

.1 12VDC

.2 [As specified in Section 08 71 00 – Door Hardware – General.]

.2 LED

.1 12VDC

.2 Provide LED to indicate system is armed

.3 Relays

.1 12VDC, 10A removable.

.2 [Single] [Double] pole.

.3 [As specified in Section 08 71 00 – Door Hardware – General.]

.4 Sirens

.1 12VDC.

.2 [100dB at 1.0m.]

.3 Honeywell Wave 2 or approved equal.

3. Execution

3.01 Installation

.1 Install to manufacturer's instructions and this specification.

.2 All alarm inputs must have a supervisory/End of Line Resistor installed.

.3 Make conduit and wiring connections to door hardware devices provided and installed under Section 08 71 00. Power for all security devices, including door strikes and field relays, must be supplied from the security panel. Electronic hardware other than electric strikes will require a separate power supply designed for the hardware intended and supplied by the door hardware supplier. Power supply to be mounted on the secure side of the door and easily accessible. A 12VDC relay controlled by the card access system to be installed inside the power supply to activate function.

.4 Security System Wiring and Conduit:

.1 Install all security wiring, including wiring on security backboard, in conduit.

.2 Install security conduit on secure side of the wall.

.3 Provide minimum 21 mm conduit home runs from field devices to security panel.

.4 Do not splice wiring between field devices and security panel.

.5 Mechanically label all wiring with the field device number at both the device and panel ends. Record field device number on record drawings.

.5 Security Backboard:

.1 Plywood or pre manufactured Backboard: 1219 mm x 2438 mm x 19 mm G1S plywood backboard, painted grey with fire retardant paint or equivalent pre manufactured fire rated

plywood board. Mount at 305 mm above finished floor.

.2 Gutter Box: 254 mm x 254 mm x 1219 mm hinged bottom, lockable gutter box, with internal metal backboard. Mount horizontally on backboard, [305 mm from the top,][600 mm from the bottom,] hinged side on bottom.

.3 Provide #6 insulated ground wire from [communications room] ground bus to security backboard and bond equipment.

.4 Install all conduits from field devices to the [top] and to the back of the gutter box. Run all field wiring to security backboard through the gutter.

.5 Provide two(2) individual dedicated 15A/120V circuits(emergency circuits are preferred when available) for panel and to duplex receptacle (located adjacent to each intrusion detection alarm panel).

.6 Provide tamper contacts on the gutter and relay boxes, and wire to the IStar control panel.

.7 Do not install equipment not specified in this section on the security backboard.

.8 Refer to the standard backboard wiring diagrams at the end of this specification. These diagrams are provided for reference and do not represent specific project requirements.

.6 Security Panels:

.1 Provide expansion modules for card readers, inputs, and outputs based on the number of devices indicated on drawings and [25 percent] future capacity.To be installed in Software House ULC approved enclosure.

.2 Provide uninterruptable power battery backup.

.3 Provide two(2) Cat [5e] [6] structured wiring cables in conduit between nearest network access patch panel and each IStar control panel.

.4 Provide one additional Cat [5e] [6] structured wiring cable to each relay cabinet to facilitate system programming.

.5 Provide connection between security control panel and building systems requiring remote annunciation:

.1 [BMS.]

.2 [Generator Status.]

.3 [Gas Detection.]

.4 [_____.]

.6 Do not monitor fire alarm system through security control panel. Refer to Section [_____] for fire alarm dialer specification.

.7 Field Devices:

.1 Card Access Doors:

.1 Mount card reader on non-hinged side of door at 1320 mm above finished floor, or as shown on drawings. Use single gang, vertically mounted device box.

.2 Where wire distance between card reader and security backboard exceeds 125 m,

provide an extender board (RM4 module) in a separate junction box near door.

.3 Mount request-to-exit sensor 300 mm above center of door, or as recommended by manufacturer. Adjust sensor for optimum coverage.

.4 Conceal door contacts in door frame. Mount on top of door, or non-hinged side, approximately 75 mm from edge.

.5 Fire-rated doors: Provide doors with pre-drilled hole for contact. Field-drilling fire-rated doors will not be accepted.

.6 Arming Readers: Provide 2-gang device box.

.2 Intrusion Detection:

.1 Mount devices at elevation and spacing indicated on drawing and calibrate based on installation conditions. Confirm device quantities and locations for optimum coverage prior to installation.

.3 Specialty Doors:

.1 [_____.]

3.02 System Programming

.1 Programming MUST be completed by Company under contract with the City of Edmonton for CCURE 9000 programming. All points are to report to monitoring through CCURE 9000.

.2 Installer to program security system leaving the default CSID and installer code.

3.03 Field Quality Control

.1 Intent

.1 Arrange and pay for security system testing. Confirm system programming and operation, field device operation and calibration, alarms, and annunciation. Record all results.

.2 If test results do not conform with applicable requirements, repair, replace, or adjust equipment. Repeat testing as necessary until acceptable results are achieved.

.3 Provide all labor, materials, instruments and equipment necessary to perform the tests specified.

.4 All tests are to be witnessed and approved by the City or City's designate.

.5 Do not perform security system testing before IT network is configured and building communication service is established.

.2 Reports

.1 Log and tabulate test results on appropriate test report forms.

.2 Submit completed test report forms for inclusion in Operations and Maintenance Manual.

.3 Security System Testing Procedure

.1 Verify and inspect installation of Card Access controller panel.

.2 Verify and inspect DC power supplies. Record DC volts output of supply(s) and batteries.

.3 Inspect and record all installed card access door components.

.4 Verify and record operation of all card access doors:

.1 Admit Entry.

.2 Exit (Request-to-exit).

.3 Forced open/held.

.4 LED operation.

.5 Door Latch Release (DLR) operation.

.6 Provide copy of report to Project Manager for review and approval.

.5 Inspect and record non-card access door components.

.6 Verify alarm operation.

.7 Verify strike operation.

.8 Verify scheduled unlock operations.

.9 Verify programmed event operations:

.1 Sirens.

.2 LEDs.

.3 Unlock schedules.

.4 [Relay outputs.]

.10 Verify remote monitoring station alarms.

.11 Verify remote monitoring station operations:

.1 Lock-unlock (if applicable).

.12 Verify and record operation of all additional intrusion devices: Motion sensors, glass break sensors, device tampers, panel tamper.

.13 Verify and record operation of all building alarm devices annunciated through the security system: Temperature sensors, BMS interconnection.

.14 Verify security panel communication fail alarm.

3.04 Closeout Activities

.1 Demonstrate Security System operation. Refer to Section 01 79 00 – Demonstration and Training.

APPENDIX C3 - SECURITY SPECIFICATIONS TEMPLATE NON-CARD ACCESS (SPEC SECTION 28 13 00)

1 General

1.01 Related Sections

.1 Section 08 71 00 – Door Hardware – General.

.2 Section 26 05 21 – Wires and Cables.

1.02 SYSTEM DESCRIPTION

.1 Security System: Protect building perimeter by means of door contacts and glass-break detectors.

.2 Detect unauthorized movement within building using motion sensors.

.1 System Arming: By [arming keypad].

.2 Refer to the Partition Zone Schedule on drawings.

.3 Signaling: By local siren(s) and remote annunciation to City monitoring facility.

1.03 SUBMITTALS

.1 Refer to Section 01 33 00: Submittal Procedures.

.2 Product Data: Provide electrical characteristics and connection requirements.

.3 Shop Drawings: Provide system wiring diagram showing each device and wiring connection required.

1.04 Closeout Submittals

.1 Refer to Section 01 78 10: Closeout Submittals.

.2 Test Reports: Indicate satisfactory completion of required tests and inspections.

.3 Record Documents: Record actual locations of Security equipment. Record field device number designation.

1.05 Quality Assurance

.1 Installer Qualifications: Certified to purchase, install and program Honeywell Ademco Vista or approved equal.

2 Products

2.01 Manufacturers

.1 Honeywell or approved equal

2.02 Control Panels

.1 Honeywell Ademco Vista (model 128 BPT or higher):

.1 Nine style B hardwired zones, with support for up to 119 additional zones and 127 wireless zones.

.2 150 user codes with seven authority levels

.3 Logging for 512 events.

.4 96 programmable outputs

.2 Power Supply:

.1 115VAC input, 12VDC 10A output.Coordinate ULC approved device with Door Hardware prior to supply/install.

.2 Filtered and electronically regulated outputs.

.3 Short circuit and thermal overload protection.

.4 Battery backup: Two 12VDC 7AH Batteries

.5 LED indication of AC input and DC output.

.6 Four (4) class 2 limited fused or PTC outputs.

.7 Lifesafety Flex or ULC approved equal

2.03 Input Devices

.1 Arm/Disarm Keypads

.1 .Alpha numeric 32 character display keypad.

.2 Honeywell 6160 or approved equal.

.2 Door and Window Contacts

.1 Closed loop type.

.2 Wide gap 19 mm (3/4”) or 23 mm (7/8”) diameter recessed mount: GE 1078C or approved equal.

.3 Surface mount: GRI 29AWGW or approved equal.

.4 Surface mount with armoured cable: GRI 4460A or approved equal.

.5 Overhead door rail mount: Sentrol SR-2325AL or approved equal.

.6 Overhead door floor mount: Amseco AS-ODC-59A or approved equal.

.3 Motion Sensors

.1 Dual technology: PIR, Microwave.

.2 Form C output.

.3 Cover tamper.

.4 Animal immunity.

.5 Fluorescent light interference filter.

.6 12VDC I/P voltage.

.7 Optics for long, medium or curtain applications, as required.

.8 Bosch ISC-CDL-W15G or approved equal.

.4 Glass Break Sensors

.1 Form C output.

.2 Cover tamper.

.3 Omni-directional microphone.

.4 RF Immunity.

.5 12VDC I/P voltage.

.6 GE Shatter Pro3 5815NT or approved equal.

.7 Closed loop type.

.5 Panic Alarm (hard wired)

.1 Lever type

.2 Normally closed

.3 Sentrol 3045 (w/ panic switch) or approved equal

.6 Wireless Panic Alarm

.1 Pendant single button activation

.2 Inovonics EN4204R or higher as needed or approved equal

.3 12VDC I/P voltage

.7 Low Temperature Sensors

.1 40 degrees Fahrenheit (4.4 degrees Celsius)

.2 Normally closed, opens at 40 degrees Fahrenheit (4.4 degrees Celsius)

.3 Temp Alert TA-40 or approved equal

2.04 OUTPUT DEVICES

.1 Sirens

.1 12VDC.

.2 [100dB at 1.0 m.]

.3 Honeywell Wave 2 or approved equal.

3 Execution

3.01 Installation

.1 Install to manufacturer's instructions and this specification.

.2 Make conduit and wiring connections to door hardware devices provided and installed under Section 08 71 00.

.3 All security devices shall be in a separate conduit system from device to panel from all other electrical systems(fire alarm, lighting, IT, etc). Similar security devices may be combined in the same conduit for example door contacts, glass break, motion detectors, keypads, etc.

.4 There shall be no splices between the security control panel and the end security devices.

.5 All materials supplied must be new and approved for their intended use.

.6 For retrofit and renovation work, open wiring installed within existing wall cavities will be considered as acceptable, subject to all authorities listed below.

.7 Flexible conduit may be used for device drops on T-Bar ceilings.

.8 All conduit, fittings and wiring must be installed in accordance with the most current edition of

the Canadian Electrical Code and Alberta Building Code, in accordance with all authorities having jurisdiction.

.9 Installation of any holes through the building roofing materials must be coordinated through a roofer designated by Buildings and Facilities Maintenance.

.10 Upon completion of the work all penetrations in building surfaces must be properly sealed, prepared and primed ready for finish paint.

.11 The contractor must implement good housekeeping practices and provide a safe work environment for all employees at the work site.

.12 An approved electrical inspection authority permit number is required for all electrical work completed and must be submitted to Facility and Landscape Infrastructure.

.13 Security System Wiring and Conduit:

.1 Install all security wiring, including wiring on security backboard, in conduit.

.2 Install security conduit on secure side of the wall.

.3 Conduit to be sized at 40% fill to allow for future expansion.

.4 Conduit runs to be concealed as best as possible.

.5 Provide minimum 21mm conduit home runs from field devices to security panel.

.6 Do not splice wiring between field devices and security panel.

.7 Mechanically label all wiring with the field device number at both the device and panel ends. Record field device number on record drawings.

.14 Security Backboard:

.1 Plywood or pre manufactured Backboard: 1219 mm x 2438 mm x 19 mm G1S plywood backboard, painted grey with fire retardant paint or equivalent pre manufactured fire rated plywood board. Mount at 305 mm above finished floor.

.2 Provide insulated bond wire from [communications room] ground bus to security backboard and bond equipment.

.3 Provide two(2) individual dedicated 15A/120V circuits(emergency circuits are preferred when available) for panel and to duplex receptacle (located adjacent to each intrusion detection alarm panel).

.4 Do not install equipment not specified in this section on the security backboard.

.15 Security Panels:

.1 Provide expansion module inputs, and outputs based on the number of devices indicated on drawings and [25 percent] future capacity. Output expansion modules may be required if strobes, LED indicators or additional sirens are used. Expansion modules to be installed at the panel in a separate lockable cabinet unless otherwise specified.

.2 Security Control Panel area requires a minimum of 1 m of clearance in front of the cabinets.

.3 Provide one (1) Cat [5e] [6] structured wiring cable in 21 mm conduit between nearest telephone board and Security Control Panel backboard.

.4 Provide two (2) 3P #22 in 21mm conduit between Security Control Panel and BMS panel.

.5 Provide connection between security control panel and building systems requiring remote annunciation:

.1 [BMS.]

.2 [Generator Status.]

.3 [Gas Detection.]

.4 [_____.]

.6 Do not monitor fire alarm system through security control panel. Refer to Section [_____] for fire alarm dialer specification.

.16 Field Devices:

.1 Motion Sensors

.1 Wall mounted motion sensor conduits and wiring shall terminate in a standard single gang device box vertically mounted, a minimum of 300 mm below finished ceiling with a max. height of 2440 mm above finished floor. Locate all devices where they can be easily accessed for maintenance.

.2 Ceiling mount 360 motion sensor conduits and wiring shall terminate in a ceiling mounted octagon device box and located as marked on the drawings. Device boxes must be securely mounted using T-Bar support bracket.

.2 Glass Break Sensors

.1 Conduits and wiring shall terminate in a standard, single gang device box, within 1219 mm (4') to 1828 mm (6'), of the window being monitored; preferably on the ceiling or facing window as per the manufacturer's instructions. Devices boxes must be securely mounted using T-Bar support bracket.

.2 One (1) glass break device shall be placed every 6096 mm (20') along exterior glass walls or as identified on drawings.

.3 Door Contacts

.1 Conduit and wiring to be installed on the top of door, non-hinged secure side of door, three inches from the outside edge of the non-hinged side of door frame. Install one (1) deep 100 mm x 100 mm box face down on top of frame approx. 75 mm from edge of frame of center of box if frame is going into block wall and is not pre-prepped.

.2 Conduit to be concealed within wall and wiring to contact location to be concealed within door frame.

.3 Where not possible to conceal conduits and wiring, terminate conduit and wiring in a standard single gang electrical device box, surface mount horizontally on the top of the non-hinged side of the door frame approx.. 75 mm from edge.

.4 Surface mount contacts may be used if recessing is not possible.

.5 Double doors, the two contacts shall be wired in series.

.4 Arming Keypad

.1 Provide 2-gang device box and locate near the main staff entry or as indicated on drawings. Mounting height to be 1400 mm above finished floor. Keypad to have LCD display

.5 Intrusion Detection:

.1 Mount devices at elevation and spacing indicated on drawing and calibrate based on installation conditions. Confirm device quantities and locations for optimum coverage prior to installation.

.6 Specialty Overhead/Rolling Shutter Doors:

.1 Overhead Doors:

.1 Overhead door contact conduit and wiring to terminate in a vertically mounted surface or flush device box, 300 mm above finished grade, within 300 mm of the overhead door track. On the non-chain side of door. Depending on the type of door a rail mount or floor mounted contact is required.

.2 Roll up type doors will require a floor mounted contact.

.2 [_____.]

.7 End of Line Resistors:

.1 All alarm inputs must have a supervisory resistor installed as per the manufacturer's equipment.

3.02 System Programming

.1 System programming must be coordinated with Facility Infrastructure Delivery. Notify appropriate CoE Corporate Security [2 weeks] prior to programming to arrange for access.

3.03 Field Quality Control

.1 Intent

.1 Arrange and pay for security system testing. Confirm system programming and operation, field device operation and calibration, alarms, and annunciation. Record all results.

.2 If test results do not conform with applicable requirements, repair, replace, or adjust equipment. Repeat testing as necessary until acceptable results are achieved.

.3 Provide all labor, materials, instruments and equipment necessary to perform the tests specified.

.4 All tests are to be witnessed and approved by the City or City's designate.

.2 Reports

.1 Log and tabulate test results on appropriate test report forms.

.2 Submit completed test report forms for inclusion in Operations and Maintenance Manual.

.3 Provide Red Line drawings of the complete security system layout.

.4 Provide Report to Project Manager For review and approval.

.3 Security System Testing Procedure

.1 Verify and inspect installation of security panel.

.2 Verify and inspect DC power supplies. Record DC volts output of supply(s) and batteries.

.3 Inspect and record all installed components.

.4 Verify and record operation of all devices:

.5 Verify alarm operation.

.6 Verify Alarm Signaling:

.1 Sirens.

.2 LEDs/Strobes

.7 Verify remote monitoring station alarms.

.8 Verify and record operation of all additional intrusion devices: Motion sensors, glass break sensors, device tampers, panel tamper.

.9 Verify and record operation of all building alarm devices annunciated through the security system: Temperature sensors, BMS interconnection.

3.04 CLOSEOUT ACTIVITIES

.1 Demonstrate Security System operation. Refer to Section 01 79 00 – Demonstration and Training.

APPENDIX D - VIDEO SURVEILLANCE SYSTEM DESIGN GUIDELINES

1 *GENERAL*

1.1 Overview

.1 This guideline is to be used in conjunction with project program requirements to design a Video Surveillance System that meets the needs of the facility and is compatible with the City of Edmonton's requirements.

.2 This guideline assumes a new digital IP-based Video Surveillance System is being installed. When working in a facility with an existing Video Surveillance System, consult with the Project Manager.

1.2 References

.1 *"Safety Audit Guide for Crime Prevention"*, City of Edmonton, Jan 2000. This document can be found on the City of Edmonton website.

.2 CSA C22.1, Canadian Electrical Code, Part 1

1.3 Responsibilities of the Prime Consultant

.1 Incorporate the requirements described in the Functional Security Program, provided by the City's Project Manager. Incorporate Crime Prevention through Environmental Design (CPTED) principles in design. Consider video surveillance when determining site layout, sightlines, interior & exterior lighting, landscaping, program relationships, etc. Effective video surveillance system design will seek to minimize the amount of video surveillance devices needed through the use of coordinated design.

.2 Where video surveillance equipment is used:

.1 Specify and locate all cameras, wiring and head-end equipment.

.2 Coordinate video surveillance design across disciplines, including architecture, landscape design, and electrical.

.3 Prepare the video surveillance system drawings and specifications, and perform contract administration relating to the video surveillance system.

1.4 Submission Requirements:

.1 All progress review submissions are to include video surveillance system information.

.1 Refer to the Professional Service Agreement and the latest edition of "Consultant Manual Volume 1, Design Process and Guidelines" for a complete list of submission requirements.

.2 If a submission is not sufficiently detailed to review, it will be returned for resubmission.

2 *TECHNICAL*

2.1 System Architecture

.1 The system architecture consists of various cameras, each of which are connected via dedicated home run data cables (Cat-6 or fiber optic) to termination/patch panels in the nearest IT network

rack located in a secure Network Access Room (NAR). The Video Surveillance recording equipment shall be located in a separate wall mounted lockable equipment rack as per Corporate Security directive A1435.

2.2 Raceway/Cable Infrastructure

.1 Contractor shall provide all raceway infrastructures necessary for a complete and fully functioning IP Video Surveillance System.

.2 Dedicated raceway required and shall be continuous from Head-end equipment rack to field end devices. Ensure compliance where cameras are mounted to light poles or other equipment that may have both line and low voltage.

.3 Minimum 21 mm trade size conduit shall be used for Cat-6.

.4 Minimum 27 mm trade size conduit shall be used for Fiber.

.5 Accepted raceways are EMT, flexible metal conduit, metal liquid tight and rigid conduit. Poly based forms of raceways such as rigid PVC may only be used underground.

.6 All boxes and fittings shall adhere to minimum cable bend radius specifications.

.7 PVC bushings are to be used on all connectors

.8 The use of LB, LL or LR conduit fittings are prohibited.

.9 Cable fill standards shall comply with the Canadian Electrical Code

.10 Provide a minimum of 1 meter extra cable at all camera locations and minimum of 3 meters extra cable at all rack locations.

.11 Provide a minimum of three (3) Cat-6 network drops between the head-end equipment rack and the nearest CoE domain network switch.

.12 Wire and conduit is to be concealed where possible. Where conduit is exposed, it should be run in non-public secure areas where possible.

.13 All cables are to be labeled at both ends using permanent mechanical labels. Cables to cameras are to use the format xx-yy, where xx is the floor number and yy is the camera number. This unique label number is to appear next to each camera on the record drawings.

2.3 Cable

.1 Less than 90 meters:

.1 Above ground: Camera runs shall have one Cat-6 cable with the following specs: Cat-6: Solid Copper, Unshielded Cable, 350 MHz Rated, FT6 as required (Yellow Jacket).

.2 Underground: Camera runs shall have one Cat-6 with the following specs: Cat-6 - Solid Copper, Flooded, Shielded Cable, 350 MHz Rated. Rated for wet locations

.2 Greater than 90 Meters. Require fiber with approved fiber modules

2.4 Termination/Certification

.1 Network lines at cameras are to be terminated with approved RJ-45 modular plug (Crystal), such as

Paladin PA-9655. NOTE: Platinum Tools EZ-RJ45 modular plugs are NOT approved for use.

.2 Camera jacks at Network head end equipment are to be terminated using standard TIA/EIA T568A with Category 6 Yellow jacks such as the Hubbell HXJ6Y or approved equal.

.3 Certification of Cat-6 lines to be done with an approved Network Certifier such as the Fluke DTX-1800, and all certification reports to be included in O&M Manuals (Note: Partial Pass test results will not be accepted).

.4 Fiber to be terminated in Fiber Trays with LC Duplex Connectors.

.5 Certification of Fiber lines to be done with an approved Network Certifier such as the Fluke DTX-1800, and all certification reports to be included in O&M Manuals.

2.5 Head End Equipment

.1 All equipment to be mounted to a 1219 mm x 2438 mm x 19 mm G1S plywood backboard, painted grey with fire retardant paint or equivalent pre manufactured fire rated plywood board mounted at 305mm above finished floor.

.2 Field conduits are to terminate in a gutter which shall be installed above the head end equipment rack at an elevation of 2 meters to center of the gutter. Video Surveillance Rack is to mount directly below the gutter using two 50 mm metal nipples with PVC bushings, connecting the bottom of the gutter to the top of the rack.

.3 Ensure that gutter door opens down and is supplied with ventilation slots and a lockable door .

.4 Equipment rack requires one 120V/20 Amp dedicated circuit, provide a 120V, 20A 5-20R “T-Slot” duplex receptacle in a surface mount device box positioned at the bottom right corner of the racks interior.

.5 Provide one #6 bonding conductor from Video Surveillance Rack to electrical system ground buss as per CEC.

2.6 Camera Mounting

.1 Electrical Box Mount – 2 Gang and 100 mm x 100 mm electrical box mounting is acceptable.

.2 Hanging Cameras - Minimum 21 mm grade size rigid metal conduit. Mounted on approved box only (Example: MOOG CA15) with explicit approval from COE Corporate Security

.3 Exterior Pendant Mount Cameras – Cameras to be hung from factory pendant mounts.

.4 Exterior Surface Wall Mount - Require 21 mm liquid tight flex with 27 mm slack through wall and factory weather shield.

.5 T-Bar Ceiling Mount - Require a 100 mm x 100 mm Box and T-Bar support bracket.

.6 Pole Mount - Refer to Section Exterior Lighting

2.7 Equipment Specifications

.1 Camera Rack Equipment

.1 Large Equipment Rack

.1 Rack: wall mount 12U minimum rack with 813 mm depth. Middle Atlantic DWR-18-32 or approved equal.

.2 Fans: 2 x 50 CFM, 30dBA, 114mm per Rack. Middle Atlantic QFAN or approved equal.

.2 Small Equipment Rack

.1 Rack: wall mount 8U rack with 813 mm depth. Middle Atlantic WRS-8 or approved equal.

.2 Fans: 2 x 50 CFM, 30dBA, 114 mm per Rack. Middle Atlantic QFAN or approved equal.

.2 UPS Equipment

.1 Rackmount 1U 1kVA Line Interactive Sine Wave UPS. Tripp Lite SMART1500RM1U or approved equal.

.3 Video Surveillance System Recording Equipment

.1 Rack mountable in a standard 482 mm rack mounting frame

.2 Linux Operating System.

.3 Video Recording Devices shall record IP based video streams. The number of video streams managed and recorded by a server shall be determined in accordance with the selected manufacturers' recommendations.

.4 Storage capacity is to meet a minimum retention requirement of 21 days or as specified by Corporate Security.

.5 Appliance to be licensed through ExacqVision for a duration of 6 years.

.6 Hardware must have a three year manufacture warranty on parts and labor.

.7 ExacqVision Pro VMS with Enterprise License or approved equal.

.4 Cameras

.1 Fixed Dome Camera

.1 The camera input power shall be Power over Ethernet (PoE) (IEEE 802.3af compliant, Class 0) or Power over Ethernet + (PoE+) (IEEE 802.3at compliant, Class 4).

.2 Cameras shall have a composite analog MONITOR output in addition to streaming video via Ethernet. The composite analog video output can be used for monitoring while installing the camera to adjust the field of view and focus.

.3 Cameras shall have an Easy Focus function, which adjusts the camera focus by using the Easy Focus button on the camera unit or remotely via the GUI. When the camera is switched between day and night modes, the Easy Focus function is automatically activated to keep the camera focused.

.4 Shall also have a zoom/focus adjustment capability via the ZOOM/FOCUS switch on the camera unit or remotely via the GUI.

.5 Simultaneously encoding up to 3 of the following streams in any combination, including multiple instances of the same compression format: JPEG and/or H.264 (High/Main/Baseline Profile)

.6 IP66-rated waterproof and dust-tight feature: The camera shall be IP66 rated in accordance

with the IEC 605292 standard for outdoor surveillance, or indoor where water ingress may pose an issue.

.7 IK10-rated vandal-resistant feature: The camera shall be IK10 rated in accordance with the IEC 62262 standard to vandal-resistant feature for protecting the camera from destructive behaviors.

.8 The camera shall utilize a 1/2.9-type progressive scan Exmor CMOS sensor.

.9 The number of effective pixels shall be approx. 2.14 Megapixels.

.10 The camera shall have an equivalent 90 dB wide dynamic range capability.

.11 The video signal-to-noise ratio shall be more than 50 dB (Auto gain control maximum rate 0 dB).

.12 The electronic shutter speed shall be set from 1/1 to 1/10,000 second.

.13 The camera shall have an integrated 3X IR compensated DC auto-iris type Varifocal lens as a standard equipment.

.14 The ranges (typical) shall be: Pan: -192° to +192°, Tilt: -7° to +75°, Rotate: -99° to +180°

.15 The focal length shall be 3mm to 9mm with horizontal field of view coverage of 105.3˚ to 35.6˚.

.16 The aperture range for the lens (F number) shall be F 1.2 (Wide) to F 2.1 (Tele).

.17 The camera operating temperature shall be within the following range:

.1 -40 ˚F to +122 ˚F (-40 ˚C to +50 ˚C) (PoE+)

.2 -22 ˚F to +122 ˚F (-30 ˚C to +50 ˚C) (PoE)

.18 Cold start temperature must be greater than:

.1 -22 ˚F (-30 ˚C) (PoE+)

.2 -4 ˚F (-20 ˚C) (PoE).

.19 SONY SNC-EM632RC or approved equal

.2 360 Degree Dome Camera

.1 The camera input power shall be a power voltage of IEEE 802.3af compliant (PoE system), DC 12V ± 10%.

.2 Simultaneously encoding up to 3 of the following streams in any combination, including multiple instances of the same compression format: JPEG and/or H.264 (High/Main/Baseline Profile)

.3 IP66-rated waterproof and dust-tight feature: The camera shall be IP66 rated in accordance with the IEC 605292 standard for outdoor surveillance or indoor where water ingress may pose an issue.

.4 IK10-rated vandal-resistant feature: The camera shall be IK10 rated in accordance with the IEC 62262 standard to vandal-resistant feature for protecting the camera from destructive behaviors.

.5 The camera shall utilize a 1/2.5-type progressive scan CMOS sensor.

.6 The number of effective pixels shall be approx. 5 Megapixels.

.7 The camera shall have an equivalent 60 dB wide dynamic range capability.

.8 The electronic shutter speed shall be set from 1/5 to 1/32,000 second.

.9 The viewing angle shall be: Horizontal: 182 ˚. Vertical: 182 ˚.

.10 The focal length shall be 0.98 mm to 1.12 mm

.11 The aperture range for the lens (F number) shall be F 2.0.

.12 The camera operating temperature shall be within the following range:

.1 -22 ˚F to +122 ˚F (-30 ˚C to +50 ˚C) (PoE)

.13 Cold start temperature must be greater than:

.1 -4 ˚F (-20 ˚C) (PoE).

.14 SONY SNC-HM662 or approved equal

.15 All other Cameras to be approved by CoE prior to use.

.16 Recording Appliance Settings and Camera Settings are to be configured to Building Facility Maintenance requirements.

.3 Pan, Tilt, Zoom Camera

.1 The camera input power shall be Power over Ethernet (PoE) (IEEE 802.3af compliant, Class 0) or Power over Ethernet + (PoE+) (IEEE 802.3at compliant, Class 4).

.2 Cameras shall have a composite analog MONITOR output in addition to streaming video via Ethernet. The composite analog video output can be used for monitoring while installing the camera to adjust the field of view and focus.

.3 The camera shall utilize a 1/2.8-type progressive scan Exmor CMOS sensor.

.4 The number of effective pixels shall be approx. 2.38 Megapixels.

.5 The camera shall have an equivalent 130 dB wide dynamic range capability.

.6 The electronic shutter speed shall be set from 1/1 to 1/10,000 second.

.7 The camera shall be capable of 360˚ endless pan rotation and a tilt range of 220˚ (Horizontal limit: Off) with auto invert function, designed for ceiling mount operation

.8 The focal length shall be 4.3 mm to 129.0 mm with horizontal field of view coverage of 63.7˚ to 2.3˚ and a vertical field of view coverage of 38.5˚ to 1.3˚

.9 The aperture range for the lens (F number) shall be F 1.6 (Wide) to F 4.7 (Tele).

.10 IP66-rated waterproof and dust-tight feature: The camera shall be IP66 rated in accordance with the IEC 605292 standard for outdoor surveillance, or indoor where water ingress may pose an issue.

.11 IK10-rated vandal-resistant feature: The camera shall be IK10 rated in accordance with the IEC 62262 standard to vandal-resistant feature for protecting the camera from destructive

behaviors.

.12 Simultaneously encoding up to 3 of the following streams in any combination, including multiple instances of the same compression format: JPEG and/or H.264 (High/Main/Baseline Profile)

.13 The camera operating temperature shall be within the following range:

.1 -40°F to +122°F (-40°C to +50°C) (AC 24 V)

.2 -22°F to +122°F (-30°C to +50°C) (HPoE+)

.14 Cold start temperature must be greater than

.1 -40°F (-40°C) (AC 24 V)

.2 -22°F (-30°C) (HPoE+).

.15 SONY SNC-WR632C or approved equal

.16 All other Cameras to be approved by CoE prior to use.

.17 Recording Appliance Settings and Camera Settings are to be configured to Building Facility Maintenance requirements.

2.8 Commissioning

.1 Commissioning of the entire system including all camera views to be completed in the presence of a Corporate Security Advisor

.2 Report shall be provided to advisor, shall include but not limited to

.1 All camera views,

.2 Camera IP addresses,

.3 Make and model of camera,

.4 Confirmation of recording,

.5 Minimum retention time,

.6 NVR IP address,

.7 UPS ip ADDRESS,

.8 Make and model of NVR.,

.9 Name of camera

2.9 Documentation and Training

.1 Documentation: A detailed report with the following information shall be provided to Project Manager in an acceptable electronic form.

.1 Equipment Location

.2 Equipment Type

.3 Equipment Number

.4 IP Address

.5 MAC Address

.6 Cable ID

.7 Camera Screen Shot

.2 Training

.1 A minimum of eight hours of hands on training shall be provided to the end users.

APPENDIX E - ARC FLASH DESIGN GUIDELINES

1 General

1.1 Overview

.1 All electrical equipment installed in buildings maintained by the City of Edmonton must be labelled with an Arc Flash and Electrical Shock warning label. This document describes the consultant's responsibilities to ensure these requirements are met when designing a new or existing facility.

.2 The technical information contained in this document is to be used as a guide only. The consultant is expected to follow his or her professional judgment as well as all applicable codes and regulations. When a deviation from these guidelines is either required or requested by the consultant or the City, it is to be documented in writing.

1.2 Responsibilities of the City of Edmonton

.1 Provide these guidelines to the Prime Consultant prior to the start of design.

.2 The assigned City of Edmonton Project Manager will be the primary point of contact, and will facilitate communication between the Prime Consultant and City, as required

1.3 Submission Requirements

.1 The Consultant responsible for the design of the electrical system is to prepare a Short Circuit, Coordination, and Arc Flash Study.

.2 A preliminary study is to be submitted prior to tender. This study will be reviewed to ensure equipment ratings are properly specified, proper coordination is possible, and the distribution is designed to minimize available incident energy as much as is practicable. This includes the incorporation of mitigating techniques and technologies where high incident energy levels are anticipated. The target maximum incident energy level for all CoE facilities is 8 cal/cm^2. However, live work may be performed on equipment with incident energy levels of up to 40 cal/cm^2. Where the incident energy is greater than 40 cal/cm^2, the City is to be notified and the Consultant is to ensure the system is designed to include measures that mitigate the risk to Electrical Workers and facilitate the implementation of the City's Safe Work Procedures. Acceptable design solutions that may be considered include external voltage portals, IR windows, arc flash reduction maintenance switch, etc.

.3 It is understood that some information affecting study results is not finalized (or in some cases known) prior to construction. Consultants are to use professional judgement to ensure preliminary assumptions are reasonable, and ensure high-risk assumptions and their consequences are explained to the City project manager.

.4 A final study is to be submitted at the conclusion of the project. The computer model developed for the preliminary study is to be updated with as-built conditions. Where final incident energy values differ substantially from the preliminary report (ie. higher incident energy), provide explanation and propose modifications to rectify the issue. Refer to Submission Requirements for Arc Flash Study format.

.5 The construction specifications are to indicate the Contractor's responsibility to provide as-built information necessary for the design Consultant to prepare the final study, and instructions to

prepare and affix all labels. The final study is to indicate all information to be printed on each label. Refer to Arc Flash and Shock Label Requirements for format and content to be included on each label.

2 References

2.1 CSA-C22.1, Canadian Electrical Code (latest adopted edition)

2.2 CSA-Z462, Workplace Electrical Safety (latest published edition)

3 Criteria

3.1 The Incident Energy Method must be used for:

.1 A new facility with a secondary utility voltage exceeding 240V, and with greater than 25KA short circuit current available; or,

.2 A new facility where there are extraordinarily long clearing times leading to available incident energy exceeding 8 cal/cm^2; or,

.3 Additions or renovations to an existing facility that has previously had an Arc Flash Study performed. The City will inform the consultant when this is the case and provide documentation and computer model of the existing distribution. Existing model may be in either SKM or ETAP and may be updated using same program or regenerated in the other; or,

.4 Addition or replacement of significant components of the electrical distribution within an existing facility that has not had an Arc Flash Study performed and that also has a secondary utility voltage exceeding 240V, and greater than 25KA short circuit current available; or, where there are extraordinarily long clearing times leading to available incident energy exceeding 8 cal/cm$^{2.}$.

3.2 A general Arc Flash Hazard label may be used in all other circumstances. Refer to the sample “Label Requirements” below for a complete description of all information to be printed on each label.

4 Submission Requirements

4.1 Short Circuit, Coordination and Arc Flash Study, is to follow the format described in the document, ‘Engineering Report Guidelines’, included as Appendix A of “City of Edmonton Consultant Manual Volume 1 – Design Process and Guidelines”.

4.2 As a minimum, include in the report the following information:

.1 Short Circuit/Fault Current Study:

.1 Maximum available short circuit current in amperes RMS symmetrical at each point of the electrical distribution system, including utility supply termination point, switchgear, MCC’s, and panelboards.

.2 Maximum fault conditions are to be determined by studying the distribution under normal (utility) and alternate power sources, and all possible switching configurations.

.2 Coordination Study:

.1 In tabular format, show settings for overcurrent protective devices. Indicate circuit breaker sensor rating, as well as long time, short time and instantaneous settings. Indicate ground-fault relay pickup and time delay settings. Indicate fuse current rating and type.

.2 Using coordination curves for overcurrent protective devices, graphically illustrate that adequate time separation exists between devices installed in series, for all possible switching configurations.

.3 Demonstrate that equipment and cables withstand the maximum short-circuit current for a time equivalent to the tripping time of the primary relay protection or tripping time of the fuse.

.4 Arc Flash Study:

.1 Calculate incident energy in calories per square centimeter.

.2 Analyse scenarios for both minimum and maximum available fault contribution from the utility and determine which provides the highest available incident energy. Where only one fault level is published by the utility, assume +/-15% of that value for the maximum and minimum contribution.

.3 Where multiple sources exist (eg. utility, generator), document and base calculations on the source that provides the highest possible incident energy.

.4 Use the “2 second rule” for maximum fault clearing time. Do not locate devices where workers cannot easily move away from a hazard within 2 seconds.

.5 Prove 40 cal/cm^2 is not exceeded at any point in the distribution. There may be rare cases where this cannot be achieved, typically due to utility contribution. These cases are to be discussed prior to the preliminary report submission.

.6 In tabular format, indicate information to be printed on each piece of equipment. This will include incident energy, PPE level, flash hazard boundary, flash protection boundary, shock hazard boundaries (limited approach, restricted approach, prohibited approach), and study date. Refer to Label Requirements section below for a complete description of all information to be printed on each label and samples.

4.3 Studies are to be performed using ETAP or SKM software. The report must include an appendix showing the single line diagram, as modelled in the software. The Preliminary and Final Arc Flash study and model are to be submitted to the City via file sharing system.

5 Arc Flash and Shock Label Requirements

5.1 Arc Flash and Shock Labels to be generated by the design Consultant using as-built information provided by the Contractor. Labels to be affixed to the front of equipment and be readily visible to the approaching worker.

5.2 Size and construction:

.1 Label to be 89 mm x 127 mm thermal transfer type warning label of high adhesion polyester

5.3 Colours:

.1 Warning Label: word WARNING to be safety black letters on a safety orange background

.2 Danger Label: word DANGER to be safety white letters on a safety red background

5.4 The label shall include the following information, at a minimum:

.1 Equipment name/description

.2 Location designation

.3 Nominal voltage

.4 Flash protection boundary

.5 Hazard risk category

.6 Incident energy

.7 Working distance

.8 PPE category and description including glove rating

.9 Limited approach distance

.10 Restricted approach distance

.11 Prohibited approach distance

5.5 Sample Labels

Figure H1 – Simple Arc Flash & Shock Warning Label Sample

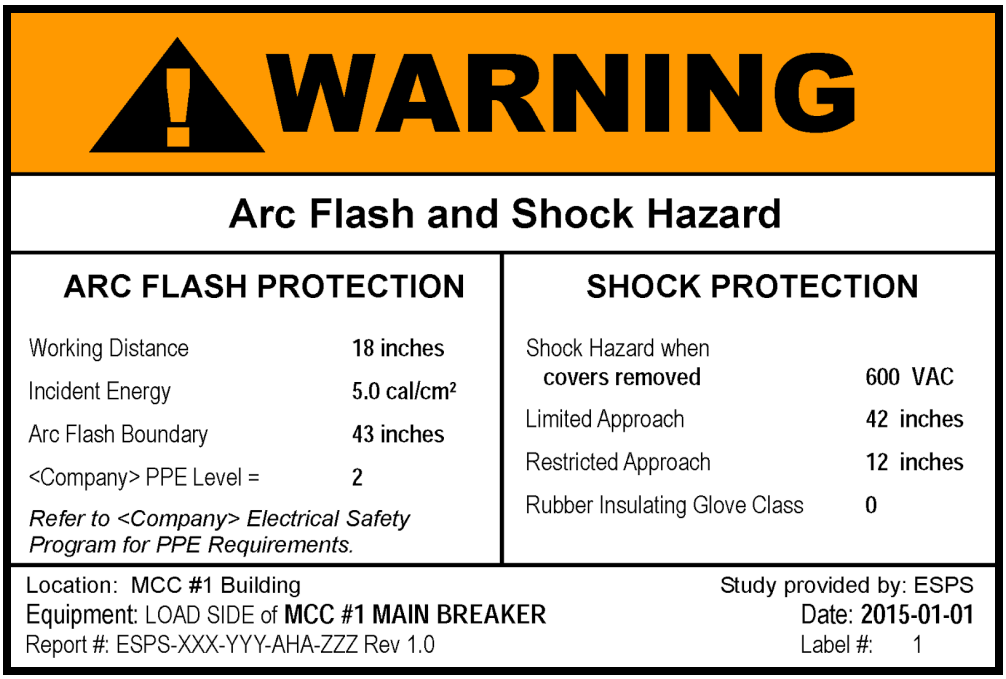

Figure H-2 – Detailed Arc Flash & Shock Warning Label for SWGR/MCC/ Electrical Distribution Equipment where Incident Energy is 40 cal/cm^2 or less

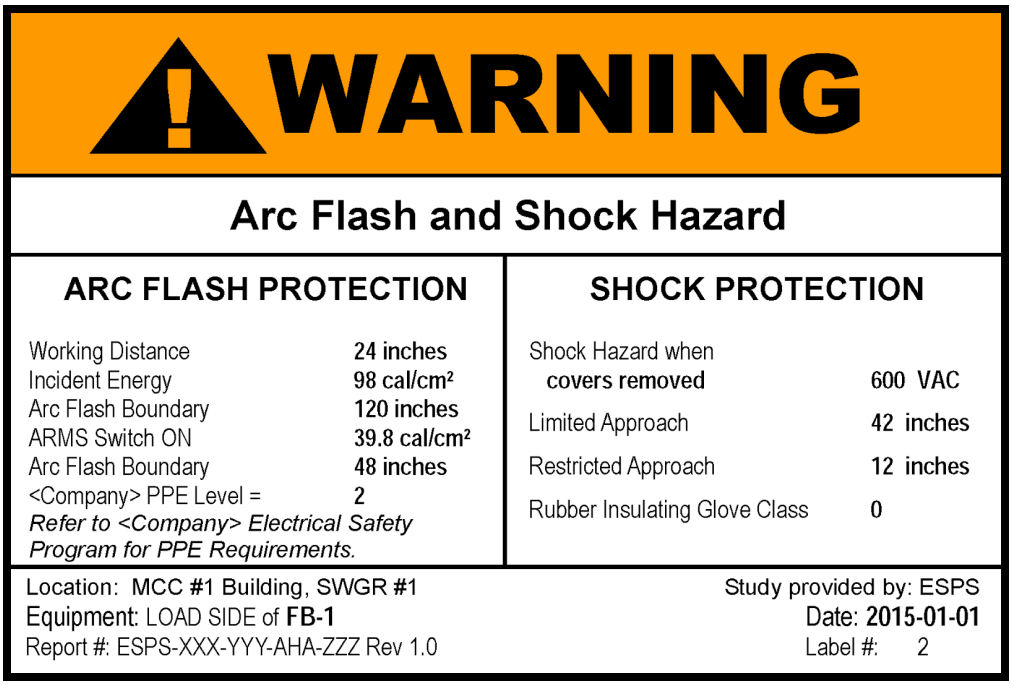

Figure H-3 – Detailed Arc Flash & Shock Warning Label for SWGR/MCC/Electrical Distribution Equipment where Arc Flash Reduction Maintenance Switch (ARMS) is installed

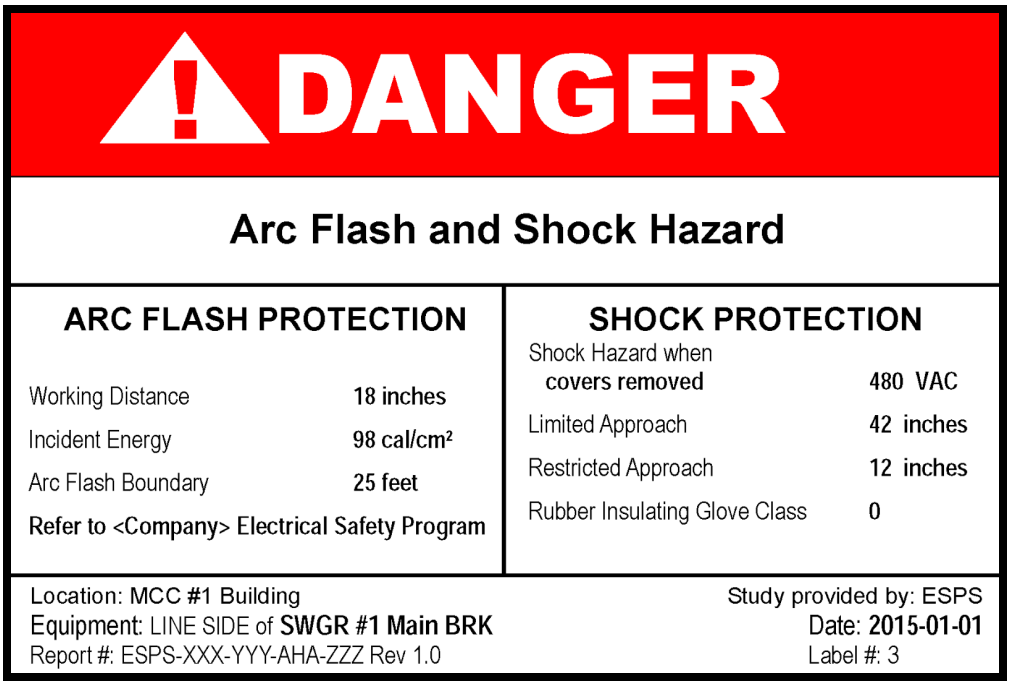

Figure H-4 – Detailed Arc Flash & Shock Danger Label for MCC/SWGR and other distribution equipment where Incident Energy is above 40 cal/cm^2

APPENDIX F - FIRE ALARM COMMUNICATION DESIGN GUIDELINES

1 General

1.1 Overview

.1 This document describes the City of Edmonton's requirements when installing and verifying Fire Alarm Communications Equipment (Dialer). All City of Edmonton facilities require a monitored Fire Alarm System, unless specifically stated otherwise. Dialers are to be provided for both ULC compliant systems and non-ULC compliant systems.

.2 Questions related to this document are to be directed to Engineering Services through the City of Edmonton project manager.

1.2 References

.1 Alberta Building Code, latest edition

.2 Alberta Fire Code, latest edition

.3 CSA C22.1, Canadian Electrical Code, Part 1, latest edition

.4 CAN/ULC-S537 - Standard for the Verification of Fire Alarm Systems, latest edition

.5 CAN/ULC-S561 - Installation and Services for Fire Signal Receiving Centres and Systems, latest edition

2 TECHNICAL

2.1 List of Approved Equipment

ULC Compliant Install	**Non-ULC Compliant Install**
Honeywell Vista 32FBT – 9 Communicator UL864 Rev 9 Version (Rev 5 and higher)	Honeywell Vista 32FBT – 9 Communicator UL864 Rev 9 Version (Rev 5 and higher)
Honeywell 6160CR-2 – Commercial Fire Alpha Keypad	Honeywell 6160CR-2 – Commercial Fire Alpha Keypad
Honeywell 7845GSMCN – Digital Cellular Communicator	Honeywell 7845GSMCN – Digital Cellular Communicator (only when no copper/fiber line)
Honeywell Battery Sense Module (BSM)	One (1) - 7 AH 12VDC battery
Two (2) - 7 AH 12VDC batteries	6 pin telephone single port jack
6 pin telephone single port jack	
GSM – ANT 3DB Cellular Antenna (required only when no cellular reception)	

2.2 Installation Instructions

.1 Install equipment on a 1200 mm x 2400 mm plywood backboard painted with fire retardant grey paint in a secure room, and mount equipment between 1000 mm and 2000 mm above finished floor. Provide 1.0m working clearance in front of all equipment.

.2 Mount keypad to the cover of a RED junction box (100x100x66mm) with 2-gang plaster ring and provide 6 pin telephone single port jack within junction box. Keypad to be mounted to box using machine screws. Box to be labelled indicating phone jack inside.

.3 Mount digital cellular communicator to the cover of a RED junction box (250x250x100mm) using machine screws.

.4 Wire the Vista 32FBT with a tamper alarm. Alarm to sound when cover is removed, in accordance with CAN/ULC-S537.

.5 Wiring specifications:

.1 Cat 6 cable between the fire alarm communication panel and main building telephone demarcation location. Terminate and test cable

.2 6c#18 FAS cable between the main fire alarm panel and fire alarm communication panel. [4c#18 may be used for non-ULC compliant installs]

.3 All other wiring to be #18 AWG and labelled appropriately. All wiring to be run direct without breaks or splices

.6 All wire to be mechanically protected in conduit; flex conduit is not permitted. Do not pull into conduit any other wire than fire alarm communication cable. Paint RED all conduit fittings and junction boxes carrying fire alarm monitoring cable.

2.3 Vista 32FBT

.1 Provide 120VAC 15 amp power from a dedicated circuit. Where available, provide power from an emergency power source. Paint the circuit breaker RED to signify it is part of the Fire Alarm system and install a position lock. Provide label on the fire alarm monitoring panel indicating the panel name and circuit number, in accordance with CAN/ULC-S537. Terminate on the panel as follows:

Terminal No.	ULC Compliant	Non-ULC Compliant
1	Power from Transformer	Power from Transformer
2	Power from Transformer	Power from Transformer
3	Lead A of 2K resistor provided with package	Lead A of 2K resistor provided with package
4	Lead B of 2K resistor on Terminal 3	Lead B of 2K resistor on Terminal 3
5	Lead A of 2K resistor	Lead A of 2K resistor

6	Lead B of 2K resistor on Terminal 5	Lead B of 2K resistor on Terminal 5
7	Left Open	Left Open
8	Left Open	Left Open
9	Left Open	Left Open
10	Left Open	Left Open
11	Positive (red) wire from both 6160CR keypad and 7845GSM Cellular Communicator	Positive (red) wire from both 6160CR keypad and 7845GSM Cellular Communicator
12	Negative (black) wire from both 6160CR and 7845GSM Cellular Communicator	Negative (black) wire from both 6160CR and 7845GSM Cellular Communicator
13	Data In (green) wire from both 6160CR and 7845GSM Cellular Communicator	Data In (green) wire from both 6160CR and 7845GSM Cellular Communicator
14	Data Out (yellow/blue) wire from both 6160CR and 7845GSM Cellular Communicator	Data Out (yellow/blue) wire from both 6160CR and 7845GSM Cellular Communicator
15	Left Open	Left Open
16	Left Open	Left Open
17	Left Open	Left Open
18	Left Open	Left Open
19	Left Open	Left Open
20	Zone 4 (red) wire from the fire alarm panel for a Normally Open input ‘Fire Alarm’ point	Zone 4 (red) wire from the fire alarm panel for a Normally Open input ‘Fire Alarm’ point
21	Zone 4 (black) other half of the Normally Open input ‘Fire Alarm’ point	Zone 4 (black) other half of the Normally Open input ‘Fire Alarm’ point
22	Zone 5 (blue) wire from the fire alarm panel for a Normally Open input ‘Fire Trouble Alarm’ point	Zone 5 (blue) wire from the fire alarm panel for a Normally Open input ‘Fire Trouble Alarm’ point

23	Zone 5 (orange) other half of the Normally Open input 'Fire Trouble Alarm' point. As well as Zone 6 (brown) wire from the fire alarm panel for a Normally Open input "Fire Supervisory Alarm"	Zone 5 (orange) other half of the Normally Open input 'Fire Trouble Alarm' point. As well as Zone 6 (brown) wire from the fire alarm panel for a Normally Open input "Fire Supervisory Alarm"
24	Zone 6 (green) other half of Normally Open input 'Fire Supervisory Alarm' point	Left Open
25	Left Open	Left Open
26	Zone 8 from the fire alarm panel for a Normally Closed input 'Fire Tamper Alarm' point	Zone 8 from the fire alarm panel for a Normally Closed input 'Fire Tamper Alarm' point
27	Zone 8 other half of the Normally Open input 'Fire Tamper Alarm' point	Zone 8 other half of the Normally Open input 'Fire Tamper Alarm' point
28	Left Open	Left Open
29	Left Open	Left Open
30	Ground wire provided from transformer case	Ground wire provided from transformer case

2.4 BSM and Two (2) 7AH 12VDC batteries [ULC Compliant Only]

.1 All leads are provided in the package. **<u>Do not use</u>** the set of leads provided with two wires going to one terminal end. Terminate as follows:

Terminal No.	Item
1	Positive (red) from battery A to positive post of BSM marked battery A
2	Negative (black) from battery A to negative of BSM marked battery A
3	Positive (red) from battery B to positive post of BSM marked battery B
4	Negative (black) from battery B to negative of BSM marked battery B
5	Positive post of Vista 32FBT to positive post of BSM marked panel
6	Negative post of Vista 32FBT to negative post of BSM marked panel

*Non-ULC installation requires only one (1) battery. Refer to section 2.5 for terminations.

2.5 One (1) 7AH 12VDC battery [Non-ULC Compliant Only]

.1 All leads are provided in the package. **Do not use** the set of leads provided with two wires going to one terminal end. Terminate as follows:

Terminal No.	Item
1	Positive post of Vista 32FBT to positive post of 7AH battery
2	Negative post of Vista 32FBT to negative post of 7AH battery

2.6 6160 CR Keypad

.1 Supply keypad with 4c#18 FAS cable from Vista 32FBT. Terminate as follows:

Terminal No.	Item
1	Y Terminal (blue/yellow wire) from terminal 14 of Vista 32FBT
2	+ Terminal (red wire) from terminal 11 of Vista 32FBT
3	- Terminal (black wire) from terminal 12 of Vista 32FBT
4	G Terminal (green wire) from terminal 13 of Vista 32FBT

2.7 7845GSMCN Cellular Communicator [ULC compliant install or non-ULC compliant install with no copper/fiber connection available]

.1 Supply Cellular Communicator with 4c#18 FAS cable from Vista 32FBT. Terminate as follows:

Terminal No.	Item
1	Left open
2	Red jumper wire to terminal 3
3	(Red wire) from terminal 11 of Vista 32FBT
4	(Black wire) from terminal 12 of Vista 32FBT
5	(Blue/yellow wire) from terminal 14 of Vista 32FBT
6	(Green wire) from terminal 13 of Vista 32FBT
7	Left open
8	Left open

2.8 GSM Antenna

.1 Required for all sites with 7845GSMCN Cellular Communicator.

.2 Install as per manufacturer's instructions.

.3 Note: No part of the Antenna may be grounded or bonded to the boxes or pipes that are installed with Vista 32FBT as this will result in earth ground issues with the panel.

2.9 Fire Alarm Panel

.1 Set all alarm point relays as Normally Open with a supervisory 2K resistor placed in parallel with wires coming from Zones of Vista 32FB. Do not twist or solder resistor to wires coming from Vista 32FBT, in accordance with CAN/ULC-S561.

Contact	Item
Fire Alarm Contact	Wired to terminals 20 and 21 for Zone 4 from Vista 32FBT
Fire Trouble Contact	Wired to terminals 22 and 23 for Zone 5 from Vista 32FBT
Fire Supervisory Contact	Wired to terminals 23 and 24 for Zone 6 from Vista 32FBT

*Non-ULC installation does not require Fire Supervisory contact

2.10 Programming and Verification

.1 After fire alarm monitoring equipment and communication service are installed, and minimum one week prior to fire alarm verification, arrange with the City to program the dialer and commence monitoring of the system. Test operation of the dialer at the same time as the main fire alarm system verification, and ensure compliance with CAN/ULC-S537 – Standard for the Verification of Fire Alarm Systems.

APPENDIX G - GUIDELINES FOR GAS DETECTION SYSTEMS

1. Background

1.1. The City of Edmonton has established guidelines for all permanent gas detection systems installed in its facilities. These guidelines are designed to:

.1 Achieve high quality and reliability in gas detection systems

.2 Eliminate failed and improper gas detection system installations

.3 Optimize for occupant safety and operational efficiency

.4 Achieve consistency across gas detection systems

1.2. The following gases are included in these guidelines:

.1 Carbon monoxide (CO)

.2 Nitrogen oxides (NO_x) – nitric oxide (NO) & nitrogen dioxide (NO_2)

.3 Chlorine (Cl_2)

.4 Hydrocarbons – e.g. natural gas and methane (CH_4), propane (C_3H_8), acetylene (C_2H_2)

.5 Refrigerants (e.g. R-22, R-422B, R-410A, R-134a)

.6 Ammonia (NH_3)

.7 Ozone (O_3)

.8 Carbon dioxide (CO_2)

1.3. These guidelines covers the following concepts, in order of appearance in the document:

.1 General requirements to which all gas detection systems must adhere

.2 Additional detailed requirements specific to each gas

.3 Tables containing requirements specific to each gas

1.4. The requirements under this document are sourced, in part, from the following codes and standards:

.1 Alberta Building Code

.2 Alberta Fire Code

.3 NFPA 52

.4 NFPA 55

.5 CSA B52

.6 CSA B149

.7 ASHRAE 15 & 34

.8 OH&S Code

.9 ASHRAE Handbook – Refrigeration

.10 Industrial Ventilation Manual – Appendix A

.11 International Programme on Chemical Safety – Data Sheets

.12 Work Safe Alberta – Chlorine and ammonia

.13 Work Safe BC – Chlorine, ammonia, and ozone

.14 Health and Safety Laboratory – Review of alarm setting for toxic gas and oxygen detectors – Research Report

1.5. This document has been developed in collaboration with the following City of Edmonton groups:

.1 Facility Engineering

.2 Facility Maintenance Services

.3 Corporate Safety and Employee Health

.4 Fire Rescue Services

.5 Community and Recreation Facilities

2. General

2.1. Application of this document

.1 The general guidelines contained in this section (section 2) shall be applied to all gas detection systems included in subsequent sections (sections 3, 4, etc.).

.2 In addition to the requirements described in 2.1.1, the guidelines contained in sections 3, 4, etc. shall apply to the gas detection systems corresponding to each respective section's title.

2.2. Alarm concentration thresholds

.1 The following definitions shall apply:

.1 **8-hour exposure limit:** Maximum time-weighted average concentration to which nearly all persons may be repeatedly exposed for 8 hours per day and 40 hours per week without adverse effect.[1]

.2 **15-minute exposure limit:** Maximum time-weighted concentration to which nearly all persons may be exposed over any 15 minute period, occurring a maximum of four times separated by a 60-minute period within an 8-hour period, without suffering from irritation, chronic or irreversible tissue damage, or narcosis of sufficient degree to increase the likelihood of accidental injury, impair self-rescue or materially reduce work efficiency, and provided the 8-hour exposure limit is not otherwise exceeded.

.3 **Ventilation activation concentration:** The measured gas concentration at which the gas shall be mitigated using an engineered ventilation system. The ventilation system shall be activated or increased to high flow in order to exhaust the gas and replace it with outdoor air.

.4 **Low alarm activation concentration:** The concentration at which the gas

[1] Industrial Ventilation Manual – 23rd edition – 1998 – Appendix A: Threshold Limit Values for Chemical Substances in the Work Environment

concentration is not harmful but would become harmful if it increases to higher concentrations. The visual alarms shall be activated to indicate the low concentration and a notification of low concentration shall be sent to City of Edmonton Corporate Security for non-emergency response (local or maintenance personnel). It is not necessary for occupants to vacate the space—the low alarm serves as a notification to occupants that there is some gas concentration in the space, which should be mitigated by the local or maintenance personnel.

.5 **High alarm activation concentration:** The minimum concentration at which the gas concentration is harmful. The visual and audible alarms shall be activated to indicate the high concentration and a notification of high concentration shall be sent to City of Edmonton Corporate Security for response from Fire Rescue Services. Occupants are expected to vacate any space in which an audible alarm can be heard—the high alarm serves as a means to evacuate the occupants of a harmful space.

.2 All gas detection systems shall employ the concentration thresholds listed in Table 1 according to the guidelines set for each gas as outlined in the rest of this document:

.1 Ventilation activation concentration

.2 Low alarm activation concentration

.3 High alarm activation concentration

2.3. System performance criteria

.1 Only the approved gas detection controllers and sensors identified in Table 3 shall be specified and installed. Any alternative gas detection controllers and sensors must be approved by City of Edmonton Engineering Services.

.2 All gas detection components shall be pre-manufactured, pre-assembled, CSA-approves devices. No custom, one-off, field-assembled, or contractor-assembled equipment shall be specified or installed as any part of a gas detection system.

.3 All gas detection controller shall have the capability of achieving call-outs to external monitoring agencies (such as security services, dispatch services, etc.).

.4 The controller shall visually indicate low and high concentration status. The controller shall display the current measured concentration or percent of lower explosive limit.

.5 All sensors, controllers, wiring, systems, etc. shall be properly shielded and resistant to all common environmental sources of electromagnetic interference or radio-frequency interference. This includes, but is not limited to, cell phones, radios, other electronics, motor drives, and appliances.

.6 All gas detection system components shall be robust and of sufficient quality to resist all foreseeable interaction with users and moderate human-powered impact. All devices shall have a NEMA rating that is appropriate for their environment (e.g. NEMA 3).

.7 For gas detection systems installed in the following locations, all devices shall be

NEMA 4X rated:

.1 Natatoriums

.2 Chlorine rooms

.3 Ice-resurfacing-machine rooms

.4 Parking garages, and any space where water will be sprayed

.8 All gas detection systems shall record and log the periodic instantaneous gas concentration measured by the systems. The data shall be stored in the controller. The data-logging shall occur at every gas concentration change.

.9 No permanent gas detection system shall employ time-weighted averaging gas concentration measurement.

.10 All gas detection controllers shall allow a specified time delay to be set with a maximum resolution of 10 seconds. Manufacturer-pre-set time delays will not be accepted (e.g. controllers only providing a set number of delay periods, such as 10, 30, or 60 seconds, are not acceptable).

.11 No gas detection system, nor any of its components, shall have any mechanism to allow a low or high alarm to be deactivated while the system is in alarm status (i.e. while the conditions at which a low or high alarm would normally activate are in place or satisfied). This means no “mute” or “silence” buttons. Exception: If a gas detection system has a mute or silence function which can be permanently disabled, that system shall be permitted, provided its mute or silence function is permanently disabled upon installation.

.12 The gas detection system designer shall include a requirement in the specifications that lubricants or sealants used for threaded conduit connections contain no substance that might adversely affect the gas detection system sensors.

.13 All gas detection system components shall be installed such that their exposure to vibration is minimized.

.14 All gas detection system components shall be installed such that their exposure to water is minimized, and their design shall drain water effectively.

.15 When interconnecting ancillary devices, maximum current and voltage ratings of the instruments’ outputs (e.g. interposing relay contacts) shall be observed. This includes barriers, isolation devices, and other intrinsically safe components.

.16 All circuits exceeding 30 V RMS or 42.4 V peak-to- peak and all circuits 30 V RMS or less that are not Class 2 power-limited—as defined by the Canadian Electrical Code (CSA 22.1)—shall be protected from accidental contact through appropriate mechanical guards or barriers.

.17 If gas detection system components or ancillary components are installed in a hazardous (classified) location, these instruments or components shall be approved for the area in which they are installed and shall be clearly marked.[2] Hazardous

[2] ISA RP92.0.02, Part II-1998 and CSA 22.1

(classified) locations are defined by the Canadian Electrical Code (CSA 22.1).

2.4. System design

.1 All gas detection systems shall be authenticated by a professional engineer. The engineer shall have relevant experience designing gas detection systems, including ancillary systems, such as ventilation, control interlock with mechanical refrigeration or combustion equipment, sensor layouts, call-outs to external monitoring, etc. The engineering consulting services shall be procured by the City of Edmonton or by the prime contractor—not by the gas detection system vendor or contractor. All gas detection design contract documents shall be reviewed by the City of Edmonton.

.2 The engineer's design process shall include the following:

.1 Gas hazard assessment

.2 Identify location and severity of potential gas sources, gas accumulation, and contact with occupants

.3 Consider air flow patterns within the space

.3 Sensor layouts shall be designed such that sensor range radii overlap one-another to cover the gas detection zone's complete horizontal plane.

.4 A sensor layout plan indicating the sensing radii and the sensors' specific and dimensioned locations—on plan and in section—shall be submitted as part of the project contract documents.

.5 All gas detection system components shall be specified in the contract documents, including the manufacturer and model number.

.6 All gas detection system sequences of operation shall be explicitly specified by the engineer, with appropriate interdisciplinary coordination. The sequence shall be included in the mechanical controls specification section.

2.5. Location

.1 All gas detection system components shall be installed in clearly visible locations.

.2 Any components that requires access or interaction (controllers, switches, display screens) shall be mounted in highly accessible locations.

.3 All points of access for periodic testing and calibration shall be located and installed such that they are highly accessible by trades.

.4 All visual and audible alarms shall be installed in highly visible locations. All relevant occupants in the zone should be able to see and hear the alarms whenever they are in the space.

.5 All gas detection sensing components shall be installed in locations and elevations as prescribed by the manufacturer and taking into account the gas being detected, the sensor's sensing radius, any effect of air currents in the space, or interference from architectural features.

.6 Sensors shall be located such that, in a large space, local high concentrations of gas (e.g. a vehicle's exhaust) are not detected before being mixed into the space.

.7 Sensors and controllers shall be located such that they are free from any environmental factors that could damage them, such as dust, debris, water, aerosols, and physical impacts.

.8 Whenever practicable, stand-alone sensors (i.e. separate from other components such as a controller) shall be mounted facing downward (preferred) or horizontally (acceptable).

.9 Sensors shall not be located near supply air outlets.

.10 Sensors shall not be located where contaminated air will short-circuit around the sensor to an exhaust inlet.

.11 Consideration shall be given to spaces that are immediately adjacent to spaces that are gas detection zones, where leaked gas from the gas-detection- zone-space could infiltrate the adjacent space. If such a risk exists, the adjacent space shall have a permanent gas detection system similar to the one used in the gas-detection-zone-space and shall be on a separate zone from the gas-detection-zone-space.

2.6. Preventing false alarms

.1 All gas detection system alarms shall have a delay function (referred-to herein as “alarm delay”). The delay period (i.e. magnitude, in seconds) for each gas shall be set according to the “alarm delay period” specification in the section corresponding to the gas in question (section 3, 4, etc.).

.1 **Low alarm:** If a sensor measures a concentration exceeding the low alarm activation concentration stated in Table 1, the low alarm shall only activate if, after the prescribed delay period, the measured concentration has not, at any point during the prescribed delay period, fallen below the low alarm activation concentration

.2 **High alarm:** If a sensor measures a concentration exceeding the high alarm activation concentration stated in Table 1, the high alarm shall only activate if, after the prescribed delay period, the measured concentration has not, at any point during the prescribed delay period, fallen below the high alarm activation concentration

.2 If a gas detection zone particular prevention of false alarms, a voting scheme may be employed. Sensors may employ a voting scheme if and only if all of the conditions, below, are satisfied:

.1 The sensors are located in the same single physical space

.2 There are 3 or more sensors

.3 The sensors achieve the same function:

.1 Example—sensors that *do* achieve the same function: Three sensors are located in a single space. All sensors are at the same elevation, are dispersed roughly equally throughout the space, and are located roughly at the same distance from the probable source of a gas leak and from the probable location of gas accumulation.

.2 Example—sensors that *do not* achieve the same function: Three sensors are located in a single space. One sensor is located near the probable source of a gas leak; one sensor is located near an exhaust fan inlet; one sensor is located in the probable location of gas accumulation.

.4 Each sensor's range shall overlap the adjacent sensor's range up to, at minimum, its midpoint (see figure, below)

.3 The voting scheme shall have the following sequence:

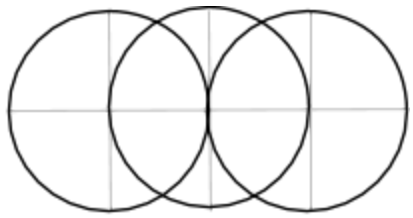

Minimum overlap of sensor ranges employed in a voting scheme

.1 **Low alarm**: If {a minimum of 1-out- of-N sensor measures a concentration exceeding the low alarm activation concentration stated in Table 1} and {any other Minimum overlap of sensor ranges employed in a voting scheme 1-out-of-N sensor measures any non-zero concentration}, then {the low alarm shall be activated}

.2 **High alarm**: If {a minimum of 1-out- of-N sensor measures a concentration exceeding the high alarm activation concentration stated in Table 1} and {any other 1-out- of-N sensor measures a concentration exceeding the low alarm activation concentration stated in Table 1}, then {the high alarm shall be activated}

2.7. Labels

.1 All gas detection devices (sensors, controllers, and manual push buttons) shall be identified using small or medium engraved plastic plate tags[3] mounted on or near the device on the wall, as shown in the annotated pictures below:

.2 The controller label shall be medium engraved plastic plate tags[4] mounted near the controller on the wall, as shown in the annotated picture below.

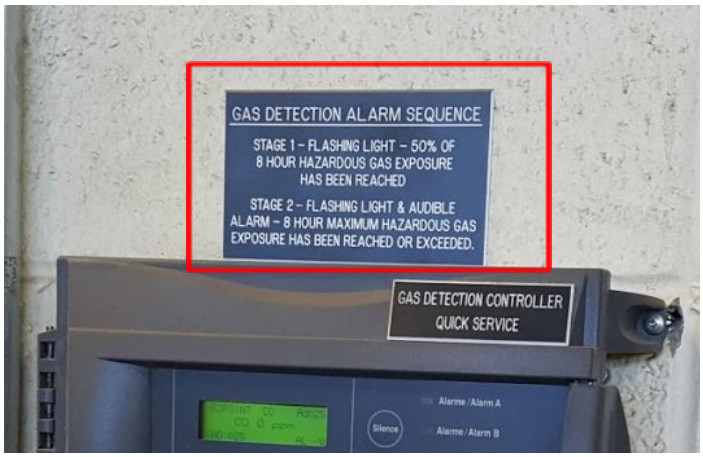

[3] Also known as “lamacoids”
[4] Also known as “lamacoids”

.3 The controller label shall include the following content:

.1 The name and chemical formula of the gas being detected

.2 The source of the gas (e.g. “gasoline combustion” for some cases of CO, “diesel combustion” for some cases of NO_x)

.3 The stages of gas detection: low and high gas concentration levels (defined in Table 1) and the corresponding control sequence actions

.4 Where its associated sensors are located.

.5 A statement that the gas is remotely monitored.

.4 All label colours shall conform to the specifications listed in Table 2.

2.8. Signs

.1 In general, all visual alarms shall be identified using large engraved plastic plate tags[5] mounted near the visual alarm, as shown in the pictures, below.

[5] Also known as “lamacoids”

.2 In maintenance spaces, such as vehicle maintenance garages, all visual alarms shall be identified using large signs mounted near the visual alarm, as shown in the picture, below;

.3 All signs shall include the following content:

.1 The name of the gas being detected

.4 All sign colours shall conform to the specifications listed in Table 2.

2.9. Visual alarms

.1 Visual alarms shall be strobe lights.

.2 Visual alarms shall be located at an elevation where it is clearly visible from all areas of the space containing the gas and out of reach of occupants. As many visual alarms as needed shall be installed for at least one visual alarm to be visible from every point within the space.

.3 For closed gas-monitored spaces, a visual alarm shall be located immediately outside the space such that it clearly indicates the detection of a gas from outside the space without needing to enter the space.

.4 For gas-monitored spaces with direct access to the outdoors, a visual alarm shall be located outside the space, on the outside of the building, such that it clearly indicates the detection of a gas from outside the space without needing to enter the space.

.5 All visual alarm colours shall conform to the specifications listed in Table 2.

2.10. Audible alarms

.1 Audible alarms shall be horns or speakers specifically designed and manufactured for

use as audible alarm annunciation.

.2 Audible alarms shall only be located in the spaces affected by a plausible gas leak or in a continuously-supervised location, as defined in gas-specific audible alarm sections below. A gas leak that occurs in, or is contained within, one part of the building shall not have audible alarms in other unaffected parts of the building.

.3 The sound made by the audible alarm shall be unique. It shall not be similar to a fire alarm, or any other alarm common to the facility, or to facilities in general.

.4 Audible alarms shall generate a sound pressure of minimum 100 dB at 3 m and shall be clearly audible from all areas of the space containing the gas.

.5 Notwithstanding the sound pressure requirements in 2.10.4, for any audible alarms installed at a continuously-supervised location (including guest services counter), the audible alarm shall create a sound pressure of between 70 dB and 80 dB at 3 m.

.6 If a gas detection zone is contained within a closed space (e.g. a mechanical room) and the system has no audible alarm outside the space, then the audible alarm shall be loud enough that it is clearly audible from outside the space containing the zone.

2.11. Ventilation systems in gas detection zones

.1 Ventilation systems shall be installed in any space where detection or ventilation of a hazardous gas is required, for the purpose of removing hazardous gases. This ventilation system shall:

.1 Follow all relevant standards, including:

.1 OSHA Technical Manual – Section III – Chapter 3: Ventilation Investigation – Appendix III: 3-1. Ventilation Primer

.2 ASHRAE Handbook – Fundamentals – Chapter 11. Air Contaminants

.3 Industrial Ventilation Manual

.2 Conform to all gas-specific ventilation requirements, including:

.1 CSA B52 (2013) – 6.2 and 6.3

.2 ASHRAE 15 & 34 – 8.11

.3 CSA B149 (2010) – 10.1

.4 Alberta Building Code (2014) – including:

.1 3.3.1

.2 6.2.2

.3 6.2.3

.4 7.2.3

.5 Occupational Health and Safety Code (2009) – Part 26

.6 NFPA 55 – Chapter 3

.7 Work Safe BC – Chlorine Safe Work Practices – Ventilation

.8 BSR/IIAR 2-201x – 6.14

.3 Be designed according to best practices specific to:

.1 The gas in question

.2 The systems and equipment containing the gas in question

.4 Employ control sequences designed to interlock with the gas detection system

.5 Ensure adequate outdoor air flow to make-up exhaust air flow

.6 Be engineered to achieve sufficient dilution of the gas, accounting for the following:

.1 Density of the gas relative to that of the ambient air

.2 Location of exhaust inlets

.3 Location of make-up or supply air outlets relative to exhaust inlet locations to avoid short-circuiting of ventilation

.4 Location in the space where the gas is most likely to accumulate

.7 All ventilation systems serving the purpose of diluting or exhausting hazardous gases from a space shall have a means of alerting the relevant occupants whenever the ventilation system is not properly functioning.[6] This alert shall be achieved by the following sequence:

.1 Once every 8 hours, the ventilation system shall be activated at high speed for a minimum of 30 seconds

.2 A flow sensor installed in the exhaust ductwork shall measure the air flow for the middle 10 seconds

.3 If the maximum measured air flow during the 10 seconds of operation is more than 10% below the design airflow setpoint at any point during the 10-second measurement period, an alert shall be sent to the building automation system, and a notification shall be sent to City of Edmonton Corporate Security for response from Facility Maintenance Services

2.12. Installation and commissioning

.1 All gas detection systems shall be installed by either of the following:

.1 Red seal journeyman electrician

.2 Certified factory installer

.2 Sensors must be kept clean, and clear of any dust or debris, throughout construction.

.3 All gas detection systems shall be commissioned. The City of Edmonton commissioning manual shall be followed, in addition to the commissioning guidelines listed, below.

.4 Commissioning shall be conducted by an independent commissioning agent, and not by the controls contractor.

[6] Occupational Health and Safety Code, Section 388

.5 The commissioning process must confirm that all gas detection systems:

.1 Are properly installed in conformance to the guidelines stated herein

.2 Measure the correct concentration of gases, as tested by an independent calibrated gas

.3 Engage correct ventilation equipment as per the design control sequence according to the corresponding gas concentration stages

.4 Engage correct audible and visual alarms according to the corresponding gas concentration stages

.5 Signal to correct external monitoring parties (i.e. City of Edmonton Corporate Security for response from Facility Maintenance Services and Fire Rescue Services) according to the corresponding gas concentration stages

.6 The commissioning process shall include static and functional check sheets that confirm, in writing, all points listed under 2.12.5.

.7 The ventilation system shall be balanced to confirm proper flow is achieved through each supply inlet and exhaust outlet.

.8 A separate verification sheet is to be completed for each sensor and each input and output point on all controllers. Each verification sheet is to be dated and signed by the commissioning agent. Each sheet shall include the expected value for the point being tested and the actual value measured with an independent portable device at the time of the commissioning dynamic test.

.9 Each sequence shall be recorded in a separate verification sheet. The sheet shall be dated and signed by the commissioning agent and include a description of the sequence.

.10 If the gas detection system has building automation system connection capability, the system's integration with the building automation system shall be verified in the commissioning process.

2.13. System configuration

.1 All gas detection components shall have hard-wired power and control connections.

.2 All gas detection components shall have hard-wired connections to each other.

.3 All gas detection systems shall use dedicated gas detection controllers to control dependent components, such as audible and visible signaling devices, and exhaust and supply fans. The gas detection system shall be a standalone control system. Sensors shall not be directly routed to a building automation system.

.4 Gas detection system outputs for building automation system control of mechanical equipment, such as ventilation, shall be made through dry contact connections. This shall constitute a status signal to the building automation system.

.5 Gas detection system shall, to the extent practical, have the capability to output data for trending to the building automation system through a BACnet/IP connection. In this case, the gas detection system equipment shall be one of the following;

.1 BTL-listed

.2 Tested by City of Edmonton Facility Maintenance Services to ensure it can be integrated into the controls network

.6 All gas detection systems shall be monitored for status by the building automation system (where it exists). The following points (application-dependent) shall be monitored:

.1 Measured gas concentration

.2 Low concentration gas detection status

.3 High concentration gas detection status

.4 Call for low ventilation rate

.5 Call for high ventilation rate

.7 Gas detection systems shall employ a controller with an appropriate maximum number of sensors and zones per controller, as specified by the manufacturer. Some small gas detection systems involving a single sensor may employ the sensor's integrated control capability (where that capability exists) to control dependent gas detection system components, as specified by the manufacturer.

.8 All gas detection system-related wiring shall be installed in conduit. The system shall not have any exposed wiring. All conduits shall have colour indication (painted in a contrasting colour or with coloured banding) to distinguish it as a safety system. All gas detection system-related wiring shall be protected by means appropriate for the area classification.

.9 Gas detection call-outs to City of Edmonton Corporate Security shall be achieved by a dry contact connection from the gas detection system to the security system, and not through the building automation system.

.10 A single gas detection system controller shall not be used to detect two or more different gas types. Exception: Carbon monoxide and nitrogen oxides will be allowed to be detected by a single, combined gas detection system comprised of one controller, provided it is designed for that purpose. In this case, all outputs shall be independent for each gas.

3. *Carbon monoxide (CO)*

3.1. Application

.1 A gas detection system shall be installed in any location where the concentrations of the gas is plausible in a concentration exceeding the low alarm point stated in Table 1.[7]

.2 Repair and storage garages (as defined by the Alberta Building Code) require gas detection systems to monitor and control the gas concentration.[8]

.3 A carbon monoxide gas detection system is required in any space that normally

[7] Occupational Health & Safety Code – Part 4: An employer must ensure that a worker's exposure to any substance […] does not exceed its occupational exposure limits […]. The high alarm point is set to indicate that the gas concentration has reached a potentially harmful level.
[8] Alberta Building Code – 3.3.5.4 & 6.2.2.3

houses fuel-burning equipment and where a domestic carbon monoxide detection device[9] is not sufficient or appropriate.

.4 A carbon monoxide gas detection system is required in all arenas and associated mechanical spaces where ice resurfacing machines are operated.

3.2. Hazardous location designation for fire protection

.1 Not applicable due to this gas's high lower explosive limit relative to the occupational exposure limit.[10]

3.3. System performance criteria

.1 No additional specific requirements.

3.4. System configuration

.1 Sensor(s) shall be mounted at occupant breathing elevation.

3.5. Alarm delay period

.1 The alarm delay period, as specified in 2.6.1, shall be 60 seconds, unless otherwise determined by the design engineer.

3.6. Visual alarm specifications

.1 Visual alarms shall be located at each of the following locations:

.1 Inside the space containing the gas

.2 Any other location required to provide warning of the hazardous gas concentration

3.7. Audible alarm specifications

.1 Audible alarms shall be located at each of the following locations:

.1 Inside the space containing the gas

.2 Any other location required to provide warning of the hazardous gas concentration

3.8. Label and sign specifications

.1 No additional specific requirements.

3.9. Control sequence of operation requirements

.1 Upon exceeding a concentration equal to the ventilation activation concentration (stated in Table 1), the mechanical ventilation system complying with 2.11 shall be activated or increased to high speed to exhaust air from the space and introduce outdoor air to the space.

.2 Upon exceeding a concentration equal to the low alarm activation concentration (stated in Table 1), the visual alarms shall be activated. A notification of low

[9] A domestic carbon monoxide detection device is of the type that plugs into a wall power outlet or is surface-mounted and often battery-powered
[10] The explosive limits are 12.5% to 74.2%. Achieving the lower explosive limit is extremely improbable given that the 8-hour exposure limit is 0.0025% (25 ppm)

concentration shall be sent to City of Edmonton Corporate Security for response from Facility Maintenance Services and the Facility Supervisor.

.3 Upon exceeding a concentration equal to the high alarm activation concentration (stated in Table 1), the audible alarms shall be activated. A notification of high concentration shall be sent to City of Edmonton Corporate Security for response from Fire Rescue Services.

4. Nitrogen oxides (NO_x) – nitric oxide (NO) & nitrogen dioxide (NO_2)

4.1. Application

.1 A gas detection system shall be installed in any location where the concentrations of the gas corresponding to this section is plausible in a concentration exceeding the high alarm point stated in Table 1.[11]

4.2. Hazardous location designation for fire protection

.1 Not applicable – gases are not combustible.

4.3. System performance criteria

.1 No additional specific requirements.

4.4. System configuration

.1 Sensor(s) shall be mounted at occupant breathing elevation.

.2 Sensor(s) shall be located 150 mm above the floor.

.3 If any vehicles with vertical exhaust pipe are to be allowed in the gas detection zone, sensor shall be mounted at high elevation, near the ceiling or on the ceiling.

4.5. Alarm delay period

.1 The alarm delay period, as specified in 2.6.1, shall be 60 seconds, unless otherwise determined by the design engineer.

4.6. Visual alarm specifications

.1 Visual alarms shall be located at each of the following locations:

.1 Inside the space containing the gas

.2 Any other location required to provide warning of the hazardous gas concentration

4.7. Audible alarm specifications

.1 Audible alarms shall be located at each of the following locations:

.1 Inside the space containing the gas

.2 Any other location required to provide warning of the hazardous gas concentration

[11] Occupational Health & Safety Code – Part 4: An employer must ensure that a worker's exposure to any substance […] does not exceed its occupational exposure limits […]. The high alarm point is set to indicate that the gas concentration has reached a potentially harmful level.

4.8. Label and sign specifications

.1 No additional specific requirements

4.9. Control sequence of operation requirements

.1 Upon exceeding a concentration equal to the ventilation activation concentration (stated in Table 1), the mechanical ventilation system complying with 2.11.1 shall be activated or increased to high speed to exhaust air from the space and introduce outdoor air to the space.

.2 Upon exceeding a concentration equal to the low alarm activation concentration (stated in Table 1), the visual alarms shall be activated. A notification of low concentration shall be sent to City of Edmonton Corporate Security for response from Facility Maintenance Services and the Facility Supervisor.

.3 Upon exceeding a concentration equal to the high alarm activation concentration (stated in Table 1), the audible alarms shall be activated. A notification of high concentration shall be sent to City of Edmonton Corporate Security for response from Fire Rescue Services.

5. Chlorine (Cl_2)

5.1. Application

.1 A gas detection system shall be installed in any location where the concentrations of the gas corresponding to this section is plausible in a concentration exceeding the high alarm point stated in Table 1.[12]

5.2. Hazardous location designation for fire protection

.1 Not applicable – gas is not combustible.

5.3. System performance criteria

.1 No specific requirements.

5.4. System configuration

.1 Sensor(s) shall be located 150 mm above the floor.

.2 A minimum of one sensor shall be installed at an optimal location for sensing a gas leak from the most probable source and where the gas is most likely to accumulate. The sensor(s) shall be installed as close as practical to the chlorine cylinders and their associated tubing, valves, regulators, etc., without impeding the movements necessary to change chlorine bottles.

.3 A minimum of one gas detection sensor shall be installed at breathing elevation (e.g. ~1,500 mm above finished floor). Within that elevation's horizontal plane, the sensor(s) shall be located where the gas is most likely to accumulate, and where occupants will most probably be located whilst inside the chlorine room.

[12] Occupational Health & Safety Code – Part 4: An employer must ensure that a worker's exposure to any substance […] does not exceed its occupational exposure limits […]. The high alarm point is set to indicate that the gas concentration has reached a potentially harmful level.

.4 The chlorine room shall be air-tight.[13]

.5 The gas detection controller shall be located immediately outside the chlorine room, inside the building. The controller shall be clearly visible before entering the chlorine room. The controller shall be located adjacent to the viewing window.

.6 Manual switches for the chlorine room ventilation system and lights shall be outside the chlorine room and located adjacent to the viewing window.[14] The ventilation system switch shall have the following characteristics:

.1 The manual switch for the exhaust fan shall be clearly-labelled

.2 The manual switch for the exhaust fan shall be separate from the light switch

.3 A fan switch shall be located both inside the chlorine room (near the interior door) and another fan switch shall be located outside the chlorine room (near the viewing window)

.4 A signal light indicating when the ventilation is operating shall be located directly adjacent to the fan switch[15]

.7 All requirements under the Alberta Building Code 7.2.3.45 with respect to the chlorine gas detection system and the associated ventilation system shall be followed.[16]

.8 In addition to the requirements under 5.4.7, the requirements governing the ventilation system shall be followed.[17]

.1 Supply air outlets (indoors) must be located to provide cross-ventilation using outside air

.9 Exhaust air outlets (outdoors) must not be positioned where they can discharge into areas where chlorine gas may cause damage or injury, such as schools, worksites, private homes, or shopping centres; or where they can be captured by the air intake system of the same or another building.

5.5. Alarm delay period

.1 The alarm delay period, as specified in 2.6.1, shall be 0 seconds. There shall be no alarm delay.

5.6. Visual alarm specifications

.1 Visual alarms shall be located at each of the following locations:

.1 Outside the building near the chlorine room door

.2 Inside the building but outside the chlorine room near the interior door to the chlorine room

[13] Alberta Building Code (2014)
[14] Alberta Building Code (2014)
[15] Alberta Building Code (2014)
[16] Alberta Building Code (2014)
[17] Work Safe BC – Chlorine Safe Work Practices

.3 Inside the chlorine room

.4 On the pool deck in a clearly audible location

.5 At the guest services counter (continuously-supervised location)

5.7. Audible alarm specifications

.1 Audible alarms shall be located at each of the following locations:

.1 Outside the building near the chlorine room door

.2 Inside the building but outside the chlorine room near the interior door to the chlorine room

.3 Inside the chlorine room

.4 On the pool deck in a clearly visible location

.5 At the guest services counter (continuously-supervised location)

.2 Audible alarms shall be located such that the complete natatorium and its related spaces (locker room, pool mechanical room) are covered by the audible range of the alarms.

5.8. Label and sign specifications

.1 No additional specific requirements.

5.9. Control sequence of operation requirements

.1 The chlorine room exhaust ventilation system shall be automatically turned off by the gas detection controller in the event of low or high concentration detection. The exhaust ventilation system shall be turned on only manually by the wall switch described in 5.4.6.

.2 An automatic timer shall turn off the exhaust ventilation system after 8 hours of continuous operation to ensure the fan is not left on unintentionally.[18]

.3 Upon exceeding a concentration equal to the low alarm activation concentration (stated in Table 1), the visual alarms shall be activated.

.4 Upon exceeding a concentration equal to the high alarm activation concentration (stated in Table 1), the audible alarms shall be activated. A notification of high concentration shall be sent to City of Edmonton Corporate Security for response from Fire Rescue Services.

6. Hydrocarbons – e.g. natural gas and methane (CH_4), propane (C_3H_8), acetylene (C_2H_2)

6.1. Application

.1 A gas detection system shall be installed in any location where the concentrations of the gas corresponding to this section is plausible in a concentration exceeding the high

[18] As per Work Safe BC – Chlorine Safe Work Practices: Ventilation is to be activated manually by a user whenever the user occupies the chlorine room. Ventilation is to be shut off manually by a user when the user leaves the chlorine room.

alarm point stated in Table 1.[19]

6.2. Hazardous location designation for fire protection

.1 The designer shall determine the space's hazardous location designation (e.g. Class I Zone 1). The hazardous location designation for each project shall be reviewed by the City of Edmonton.

.2 The gas detection system, including all its components, shall conform to the requirements of this classification.

6.3. System performance criteria

.1 Any gas with sufficiently low density to require a sensor or sensors to be installed at ceiling level (e.g. natural gas and methane, as stated in 6.4.7), the sensor or sensors shall be capable of being calibrated from occupant elevation (e.g. ~1,500 mm above finished floor).

6.4. System configuration

.1 If the gas is less dense than air, the sensor(s) shall be located at high elevation, near the ceiling or on the ceiling.

.2 If the gas's density is similar to air, the sensor(s) shall be mounted at occupant breathing elevation.

.3 If the gas is more dense than air, the sensor(s) shall be mounted 150 mm above the floor.

.4 The gas detection sensor shall be located in the same space as the hydrocarbon gas equipment and source. The specific location must be designed according to the gas type, room configurations, and manufacturer's recommendations.

.5 The gas detection controller shall be located immediately outside the space containing the natural gas appliance. If this is not possible, then 6.4.6 shall apply.

.6 If the guideline described in 6.4.5 is not possible, then the controller shall be located a safe distance away from the natural gas equipment and source, and be rated for the location in which it is installed.

.7 Where a vehicle is fuelled indoors:

.1 The gas detection sensors shall:[20]

.1 Be interlocked to shut off the vehicle refuelling appliance

.2 The mechanical ventilation system serving the fuelling area shall:[21]

.1 Vent the fuelling area to the outdoors at a flow rate of 25 times the flow rate of the vehicle refuelling appliance

.2 Provide for minimum clearances from the discharge as specified in

[19] Occupational Health & Safety Code – Part 4: An employer must ensure that a worker's exposure to any substance […] does not exceed its occupational exposure limits […]. The high alarm point is set to indicate that the gas concentration has reached a potentially harmful level.
[20] CSA B149.1 – 10.1.6
[21] CSA B149.1 – 10.1.7

Table 5.2 in CSA B149.1 (see the table directly in the CSA standard)

6.5. Alarm delay period

.1 The alarm delay period, as specified in 2.6.1, shall be 10 seconds, unless otherwise determined by the design engineer.

6.6. Visual alarm specifications

.1 Visual alarms shall be located at each of the following locations:

.1 Outside the building near the space containing the gas equipment and source, near the outside door

.2 Inside the building but outside the space containing the gas equipment and source,near the door to the space

.3 Inside the space containing the gas equipment and source

.4 In all adjacent arenas (if applicable), in a location that is clearly visible by staff and patrons

.5 At a continuously-supervised location

6.7. Audible alarm specifications

.1 For the machinery room, audible alarms shall be located at each of the following locations:

.1 Inside the space containing the gas[22]

.2 Immediately outside each entrance to the space containing the gas[23]

.3 At a continuously-supervised location

.2 For adjoining public areas, audible alarms shall be located at each of the following locations:

.1 In the adjoining public area

.2 At a continuously-supervised location

6.8. Label and sign specifications

.1 No additional specific requirements.

6.9. Control sequence of operation requirements

.1 The ventilation system shall be turned on automatically any time the ice resurfacing machine fuelling station is active.

.2 Upon exceeding a concentration equal to the ventilation activation concentration (stated in Table 1), the mechanical ventilation system complying with 2.11.1 shall be activated to exhaust air from the space and introduce outdoor air to the space. The

[22] In accordance with ASHRAE 15 and 34 – 8.11.2.1
[23] In accordance with ASHRAE 15 and 34 – 8.11.2.1

vehicle refuelling appliance shall be switched off automatically.

.3 Upon exceeding a concentration equal to the low alarm activation concentration (stated in Table 1), the visual alarms shall be activated. A notification of low concentration shall be sent to City of Edmonton Corporate Security for response from Facility Maintenance Services and the Facility Supervisor. The vehicle refuelling appliance shall be switched off automatically.

.4 Upon exceeding a concentration equal to the high alarm activation concentration (stated in Table 1), the audible alarms shall be activated. A notification of high concentration shall be sent to City of Edmonton Corporate Security for response from Fire Rescue Services. The vehicle refuelling appliance shall be switched off automatically.

7. Refrigerants (e.g. R-22, R-422B, R-410A, R-134a)

7.1. Application

.1 A gas detection system shall be installed in any location where the concentrations of the gas corresponding to this section is plausible in a concentration exceeding the high alarm point stated in Table 1.[24]

7.2. Hazardous location designation for fire protection

.1 The designer shall determine the space's hazardous location designation (e.g. Class I Zone 1). The designation is dependent on CSA B52 group designation (e.g. Group A2 Blends). The hazardous location designation for each project shall be reviewed by the City of Edmonton.

.2 The gas detection system, including all its components, shall conform to the requirements of this classification.

7.3. System performance criteria

.1 The gas detection system shall include a means of manual reset. The gas detection system shall require a manual reset following a detection of gas.[25] This manual reset function shall be password-protected.

.2 The ventilation exhaust system serving the room containing the refrigeration machinery shall be designed including the full requirements of CSA B52 and ASHRAE 15 and 34. For example, see section 6.3 in CSA B52 and section 8.11.3 in ASHRAE 15 and 34.

7.4. System configuration

.1 If the gas is more dense than air, the sensor(s) shall be mounted 150 mm above the floor.

.2 A minimum of two zones shall be established: one inside the refrigeration machinery room and one in any adjoining public area with door access to the machinery room. Gas detection in each zone shall only activate ventilation and visual and audible

[24] Occupational Health & Safety Code – Part 4: An employer must ensure that a worker's exposure to any substance […] does not exceed its occupational exposure limits […]. The high alarm point is set to indicate that the gas concentration has reached a potentially harmful level.
[25] In accordance with ASHRAE 15 and 34

alarms in that zone, and not in adjacent zones.

.3 The refrigeration machinery room shall be a Class T machinery room, as defined in CSA B52. All requirements under the definition of a Class T machinery room in CSA B52 shall be implemented and followed.

.4 The gas detection controller for the machinery room shall be located inside the building, immediately inside the room containing refrigeration machinery.

.5 The gas detection controller for the adjoining public area shall be located in an area that is accessible by maintenance personnel, but restricted to the public.

.6 The gas detection system manual reset shall be located inside the room containing refrigeration machinery.[26]

.7 In the machinery room, a gas detection sensor shall be where leaked refrigerant will concentrate.[27]

.8 In the adjoining public area, a minimum of one gas detection sensor shall be located near the door to the machinery room.

.9 The mechanical ventilation system (exhaust and make-up air) serving the machinery room shall be on a separate electrical circuit.[28]

.10 A control switch for the mechanical ventilation system serving the machinery room shall be located immediately outside the machinery room door, and shall comply with CSA B52 (2013) – 6.2.5.4.[29]

.11 A display screen shall be installed immediately outside the machinery room door, displaying the measured concentration in the machinery room zone.

7.5. Alarm delay period

.1 The alarm delay period, as specified in 2.6.1, shall be 10 seconds, unless otherwise determined by the design engineer.

7.6. Visual alarm specifications

.1 For the machinery room, visual alarms shall be located at each of the following locations:

.1 Inside the space containing the gas[30]

.2 Immediately outside each entrance to the space containing the gas[31]

.3 At a continuously-supervised location

.2 For adjoining public areas, visual alarms shall be located at each of the following locations:

.1 In a location that is clearly visible by staff and patrons

[26] In accordance with ASHRAE 15 and 34
[27] In accordance with ASHRAE 15 and 34
[28] In accordance with ASHRAE 15 and 34
[29] In accordance with ASHRAE 15 and 34 and CSA B52 – 6.2
[30] In accordance with ASHRAE 15 and 34 – 8.11.2.1
[31] In accordance with ASHRAE 15 and 34 – 8.11.2.1

.2 At a continuously-supervised location

7.7. Audible alarm specifications

.1 For the machinery room, audible alarms shall be located at each of the following locations:

.1 Inside the space containing the gas[32]

.2 Immediately outside each entrance to the space containing the gas[33]

.3 At a continuously-supervised location

7.8. Label and sign specifications

.1 No additional specific requirements.

7.9. Control sequence of operation requirements

.1 If required under CSA B52,[34] in the event of a refrigerant leak at a level not exceeding the refrigerant threshold limit value or time-weighted average as measured by the gas detection system, any combustion equipment located in the space shall be shut down.

.2 If any combustion equipment is located in the room containing refrigerant or refrigeration machinery, the gas detection system shall shut down the combustion process in the event of a refrigeration leak.[35]

.3 Upon exceeding a concentration equal to the ventilation activation concentration (stated in Table 1), the mechanical ventilation system complying with 2.11.1 shall be activated, or increased, to high flow to exhaust air from the space and introduce outdoor air to the space.

.4 Upon exceeding a concentration equal to the low alarm activation concentration (stated in Table 1), the visual alarms shall be activated. A notification of low concentration shall be sent to City of Edmonton Corporate Security for response from Facility Maintenance Services and the Facility Supervisor.

.5 Upon exceeding a concentration equal to the high alarm activation concentration (stated in Table 1), the audible alarms shall be activated. A notification of high concentration shall be sent to City of Edmonton Corporate Security for response from Fire Rescue Services.

8. *Ammonia (NH_3)*

8.1. Application

.1 A gas detection system shall be installed in any location where the concentrations of the gas corresponding to this section is plausible in a concentration exceeding the high alarm point stated in Table 1.[36]

[32] In accordance with ASHRAE 15 and 34 – 8.11.2.1
[33] In accordance with ASHRAE 15 and 34 – 8.11.2.1
[34] See CSA B52 – 6.2.4.3
[35] In accordance with ASHRAE 15 and 34
[36] Occupational Health & Safety Code – Part 4: An employer must ensure that a worker's exposure to any substance […] does not exceed its occupational exposure limits […]. The high alarm point is set to indicate that the gas concentration has reached a potentially harmful level.

8.2. Hazardous location designation for fire protection

.1 The designer shall determine the space's hazardous location designation (e.g. Class I Zone 1). The hazardous location designation for each project shall be reviewed by the City of Edmonton.

.2 The gas detection system, including all its components, shall conform to the requirements of this classification.

8.3. System performance criteria

.1 For small spaces with potential for ammonia leaks, the gas detection system shall employ a combination of low and high concentration sensors such that the gas detection system accurately detects both toxic concentrations (low) and explosive concentrations (high) of ammonia. For all other ammonia detection applications, where the risk of an explosive concentration of ammonia are sufficiently low, a low concentration sensor shall be employed.

.2 The gas detection system shall include a means of manual reset. The gas detection system shall require a manual reset following a detection of gas.[37] This manual reset function shall be password-protected.

.3 The ventilation exhaust system serving the room containing the refrigeration machinery shall be designed including the full requirements of CSA B52 and ASHRAE 15 and 34. For example, see section 6.3 in CSA B52 and section 8.11.3 in ASHRAE 15 and 34.

.4 Ammonia gas detection systems shall have a display screen installed immediately outside the machinery room door, displaying the measured concentration in the gas detection zone. This shall allow a person to verify the instantaneous measured concentration inside gas detection zone before entering that space.

8.4. System configuration

.1 Sensor(s) shall be mounted at high elevation; near the ceiling or on the ceiling.

.2 A minimum of two zones shall be established: one inside the refrigeration machinery room and one in any adjoining public area with door access to the machinery room. Gas detection in each zone shall only activate ventilation and visual and audible alarms in that zone, and not in adjacent zones.

.3 The refrigeration machinery room shall be a Class T machinery room, as defined in CSA B52. All requirements under the definition of a Class T machinery room in CSA B52 shall be implemented and followed.

.4 The gas detection controller for the machinery room shall be located inside the building, immediately inside the room containing refrigeration machinery.

.5 The gas detection controller for the adjoining public area zone shall be located in an area that is accessible by maintenance personnel, but restricted to the public.

.6 The gas detection system manual reset defined in 8.3.2 shall be located inside the

[37] In accordance with ASHRAE 15 and 34

room containing refrigeration machinery.[38]

.7 In the machinery room, a minimum of two gas detection sensors shall be installed in rooms of 370 m² floor area and an additional sensor shall be installed for every 185 m² of additional floor area. A minimum of one sensor shall be installed at breathing elevation (e.g. ~1,500 mm above finished floor), near a ventilation system air intake inside the room (to facilitate sampling of well-mixed air. A minimum of one sensor shall be installed at high elevation; near the ceiling or on the ceiling; where leaked refrigerant will concentrate.[39]

.8 In the adjoining public area, a minimum of one sensor shall be installed at high elevation; near the ceiling or on the ceiling; inside the building but outside the door to the Class T machinery room vestibule, in a location where leaked refrigerant will concentrate locally. Sensors shall be located for the purpose of protecting occupants.

.9 The mechanical ventilation system (exhaust and make-up air) serving the machinery room shall be on a separate electrical circuit.[40]

.10 A control switch for the mechanical ventilation system serving the machinery room shall be located immediately outside the machinery room door, and shall comply with CSA B52 (2013) – 6.2.5.4.[41]

.11 A display screen shall be installed immediately outside the machinery room door, displaying the measured concentration in the machinery room zone.

8.5. Alarm delay period

.1 The alarm delay period, as specified in 2.6.1, shall be 10 seconds, unless otherwise determined by the design engineer.

8.6. Visual alarm specifications

.1 For the machinery room, visual alarms shall be located at each of the following locations:

.1 Inside the space containing the gas[42]

.2 Immediately outside each entrance to the space containing the gas[43]

.3 At a continuously-supervised location

.2 For adjoining public areas, visual alarms shall be located at each of the following locations:

.1 In a location that is clearly visible by staff and patrons

.2 At a continuously-supervised location

8.7. Audible alarm specifications

.1 For the machinery room, audible alarms shall be located at each of the following

[38] In accordance with ASHRAE 15 and 34
[39] In accordance with ASHRAE 15 and 34
[40] In accordance with ASHRAE 15 and 34
[41] In accordance with ASHRAE 15 and 34 and CSA B52 – 6.2
[42] In accordance with ASHRAE 15 and 34 – 8.11.2.1, CSA B52 – 6.2.3
[43] In accordance with ASHRAE 15 and 34 – 8.11.2.1

locations:

.1 Inside the space containing the gas[44]

.2 Immediately outside each entrance to the space containing the gas[45]

.3 At a continuously-supervised location

.2 For adjoining public areas, audible alarms shall be located at each of the following locations:

.1 In the adjoining public area

.2 At a continuously-supervised location

8.8. Label and sign specifications

.1 No additional specific requirements.

8.9. Control sequence of operation requirements

.1 If required under CSA B52,[46] in the event of a refrigerant leak at a level not exceeding the refrigerant threshold limit value or time-weighted average as measured by the gas detection system, any combustion equipment located in the space shall be shut down.

.2 f any combustion equipment is located in the room containing refrigerant or refrigeration machinery, the gas detection system shall shut down the combustion process in the event of a refrigeration leak.[47]

.3 Upon exceeding a concentration equal to the ventilation activation concentration (stated in Table 1), the mechanical ventilation system complying with 2.11.1 shall be activated, or increased, to high flow to exhaust air from the space and introduce outdoor air to the space.

.4 Upon exceeding a concentration equal to the low alarm activation concentration (stated in Table 1), the visual alarms shall be activated. A notification of low concentration shall be sent to City of Edmonton Corporate Security for response from Facility Maintenance Services and the Facility Supervisor.

.5 Upon exceeding a concentration equal to the high alarm activation concentration (stated in Table 1), the audible alarms shall be activated. A notification of high concentration shall be sent to City of Edmonton Corporate Security for response from Fire Rescue Services.

9. *Ozone (O_3)*

9.1. Application

.1 A gas detection system shall be installed in any location where the concentrations of the gas corresponding to this section is plausible in a concentration exceeding the high

[44] In accordance with ASHRAE 15 and 34 – 8.11.2.1
[45] In accordance with ASHRAE 15 and 34 – 8.11.2.1
[46] See CSA B52 – 6.2.4.3
[47] In accordance with ASHRAE 15 and 34

alarm point stated in Table 1.[48]

9.2. Hazardous location designation for fire protection

.1 Not applicable – gas is not combustible.

9.3. System performance criteria

.1 No additional specific requirements

9.4. System configuration

.1 Sensor(s) shall be installed 150 mm above the floor.

.2 The gas detection sensor shall be located inside the ozone generator room, near the ozone generator, between the generator and the destructor.[49]

.3 If the ozone generator system has a reaction tank or destructor further than 5 m away from the gas detection sensor described in 9.4.1, that reaction tank or destructor shall have an additional gas detection sensor.[50]

9.5. Alarm delay period

.1 The alarm delay period, as specified in 2.6.1, shall be 10 seconds, unless otherwise determined by the design engineer.

9.6. Visual alarm specifications

.1 Visual alarms shall be located at each of the following locations:

.1 Inside the space containing the gas

.2 Outside the space near each door accessing the space

9.7. Audible alarm specifications

.1 Audible alarms shall be located at each of the following locations:

.1 Inside the space containing the gas

.2 Outside the space near each door accessing the space

9.8. Label and sign specifications

.1 No additional specific requirements.

9.9. Control sequence of operation requirements

.1 The ventilation system shall be turned on any time the ozone generator is active.

.2 Upon exceeding a concentration equal to the ventilation activation concentration (stated in Table 1), the mechanical ventilation system complying with 2.11.1 shall be activated to exhaust air from the space and introduce outdoor air to the space. The ozone generator shall be turned off.[51]

---

[48] Occupational Health & Safety Code – Part 4: An employer must ensure that a worker's exposure to any substance […] does not exceed its occupational exposure limits […]. The high alarm point is set to indicate that the gas concentration has reached a potentially harmful level.
[49] Work Safe BC – Ozone Safe Work Practices
[50] Work Safe BC – Ozone Safe Work Practices
[51] Work Safe BC – Ozone Safe Work Practices

.3 Upon exceeding a concentration equal to the low alarm activation concentration (stated in Table 1), the visual alarms shall be activated. A notification of low concentration shall be sent to City of Edmonton Corporate Security for response from Facility Maintenance Services.

.4 Upon exceeding a concentration equal to the high alarm activation concentration (stated in Table 1), the audible alarms shall be activated. A notification of high concentration shall be sent to City of Edmonton Corporate Security for response from Fire Rescue Services.

10. Carbon dioxide (CO_2)

10.1. Application

.1 A gas detection system shall be installed in any location where the concentrations of the gas corresponding to this section is plausible in a concentration exceeding the high alarm point stated in Table 1.[52]

.2 A gas detection system shall be installed in any enclosed space containing a carbon dioxide storage tank or piping. If the total volume of carbon dioxide relative to the space volume is lower than that which would exceed the high alarm point stated in Table 1, then the requirement for gas detection shall be waived.

10.2. Hazardous location designation for fire protection

.1 Not applicable – gas is not combustible.

10.3. System performance criteria

.1 No additional specific requirements.

10.4. System configuration

.1 In occupied spaces, sensor(s) shall be mounted at occupant breathing elevation.

.2 In mechanical spaces, sensor(s) shall be installed 150 mm above the floor. If the mechanical space has occupant traffic as part of normal operations (e.g. pool mechanical room), 10.4.1 shall also apply.

.3 The gas detection sensor(s) shall be located in the same space as the carbon dioxide injection point into the pool water circulation system, in a location where the gas will accumulate. Gas detection sensors shall also be located in any space that contains carbon dioxide piping (i.e. between the carbon dioxide tank and the injection point).

10.5. Alarm delay period

.1 The alarm delay period, as specified in 2.6.1, shall be 10 seconds, unless otherwise determined by the design engineer.

10.6. Visual alarm specifications

.1 Visual alarms shall be located at each of the following locations:

.1 In the space where the carbon dioxide injection equipment is located, in a

[52] Occupational Health & Safety Code – Part 4: An employer must ensure that a worker's exposure to any substance […] does not exceed its occupational exposure limits […]. The high alarm point is set to indicate that the gas concentration has reached a potentially harmful level.

clearly visible location

.2 On the pool deck in a clearly visible location

.3 At a continuously-supervised location

10.7. Audible alarm specifications

.1 Audible alarms shall be located at each of the following locations:

.1 In the space where the carbon dioxide injection equipment is located, in a clearly visible location

.2 On the pool deck in a location that is clearly visible by the lifeguard and the natatorium occupants

.3 At a continuously-supervised location

10.8. Label and sign specifications

.1 No additional specific requirements.

10.9. Control sequence of operation requirements

.1 Upon exceeding a concentration equal to the ventilation activation concentration (stated in Table 1), the mechanical ventilation system complying with 2.11.1 shall be activated to exhaust air from the space and introduce outdoor air to the space.

.2 Upon exceeding a concentration equal to the low alarm activation concentration (stated in Table 1), the visual alarms shall be activated. A notification of low concentration shall be sent to City of Edmonton Corporate Security for response from Facility Maintenance Services.

.3 Upon exceeding a concentration equal to the high alarm activation concentration (stated in Table 1), the audible alarms shall be activated. A notification of high concentration shall be sent to City of Edmonton Corporate Security for response from Fire Rescue Services.

Table 1 – Alarm and ventilation activation concentrations

Section	Gas	Formula	Ventilation activation concentration	Low alarm activation concentration	High alarm activation concentration
Carbon monoxide	Carbon monoxide	CO	2.5 ppm [1]	25 ppm [3]	50 ppm [5]
Nitrogen oxides	Nitric oxide	NO	2.5 ppm [1]	25 ppm [3]	50 ppm [5]
	Nitrogen dioxide	NO_2	0.3 ppm [1]	3.0 ppm [3]	4.0 ppm [5]
Chlorine	Chlorine	Cl_2	—	0.5 ppm	1.0 ppm
Hydrocarbons	Natural gas & methane	92% CH_4 & 100% CH_4	0.50% [2]	0.50% [6]	1.00% [7]
	Propane	C_3H_8	0.20% [2]	0.20% [6]	0.42% [7]
	Acetylene	C_2H_2	0.25% [2]	0.25% [6]	0.50% [7]
Refrigerants	R-410A	CH_2F_2 (50%) CHF_2CF_3 (50%)	1,000 ppm [2]	1,000 ppm [3]	2,000 ppm [5]
	R-134a	CH_2FCF_3	1,000 ppm [2]	1,000 ppm [3]	2,000 ppm [5]
	R-22	$CHClF_2$	1,000 ppm [2]	1,000 ppm [3]	2,000 ppm [5]
Ammonia (Class T machinery room zone)	Ammonia	NH_3	25 ppm [2]	25 ppm	35 ppm
Ammonia (Public areas zone)	Ammonia	NH_3	15 ppm [2]	15 ppm	15 ppm
Ozone	Ozone	O_3	0.05 ppm [2]	0.05 ppm	0.1 ppm
Carbon dioxide	Carbon dioxide	CO_2	5,000 ppm [2]	5,000 ppm [3]	17,500 ppm [5]

[1] Equal to 10% of 8-hour limit. Designed to mitigate undesirable gas concentrations as early as possible.
[2] Equal to the low alarm activation concentration; presence of gas is not expected, therefore must not be obscured by ventilation.
[3] Equal to 100% of the 8-hour limit. Designed to be sufficiently lower than the high alarm activation concentration to provide personnel with enough time for staff to stop the leak.
[4] Equal to 50% of the 8-hour limit. Designed to provide personnel with enough time for staff to stop the leak.
[5] Equal to the midpoint between (i.e. the average of) the 8-hour and 15-minute limits. Represents the highest possible concentration that precludes harmful exposure, given the expected response time from Facility Maintenance Services.
[6] Equal to 10% of the lower explosive limit. Based on industrial gas detection standard.
[7] Equal to 20% of the lower explosive limit. Based on industrial gas detection standard.

Table 2 – Visual alarm, label, and sign colours

Section	Gas	Formula	Visual alarm light colour	Label and sign colour
Carbon monoxide	Carbon monoxide	CO	Green	Green with white lettering
Nitrogen oxides	Nitric oxide	NO	White	White with black lettering
	Nitrogen dioxide	NO_2		
Chlorine	Chlorine	Cl_2	Amber	Amber with black lettering
Hydrocarbons	Natural gas & methane	92% CH_4 & 100% CH_4	Red	Red with white lettering
	Propane	C_3H_8		
	Acetylene	C_2H_2		
Refrigerants	R-410A	CH_2F_2 (50%) CHF_2CF_3 (50%)	Blue	Blue with white lettering
	R-134a	CH_2FCF_3		
	R-22	$CHClF_2$		
Ammonia	Ammonia	NH_3	Blue	Blue with white lettering
Ozone	Ozone	O_3	Cyan	Cyan with black lettering
Carbon dioxide	Carbon dioxide	CO_2	Magenta	Magenta with black lettering

Table 3 – Acceptable manufacturers and models

Section	Gas	Formula	Approved controller	Approved sensor
Carbon monoxide	Carbon monoxide	CO	Honeywell Manning AirAlert 96d	Honeywell E^3Point
Nitrogen oxides	Nitric oxide	NO	Honeywell Manning AirAlert 96d	Honeywell E^3Point
	Nitrogen dioxide	NO_2		
Chlorine	Chlorine	Cl_2	TBD	TBD
Hydrocarbons	Natural gas & methane	92% CH_4 & 100% CH_4	TBD	TBD
	Propane	C_3H_8		
	Acetylene	C_2H_2		
Refrigerants	R-410A	CH_2F_2 (50%) CHF_2CF_3 (50%)	Honeywell VA301 EM	Honeywell VA301IRFS
	R-134a	CH_2FCF_3		
	R-22	$CHClF_2$		
Ammonia	Ammonia	NH_3	Honeywell Manning AirAlert 96d	Low concentrations: Honeywell Manning EC-FX-NH3 High concentrations: Honeywell AirScan IR-F9-NH3-0/2%-N1
Ozone	Ozone	O_3	TBD	TBD
Carbon dioxide	Carbon dioxide	CO_2	TBD	TBD

Table 4 – Occupational exposure limits and lower explosive limits

Section	Gas	Formula	Lower explosive limit[2]	8-hour exposure limit[1]	15-minute exposure limit[1]	Ceiling limit
Carbon monoxide	Carbon monoxide	CO	—	25 ppm	75 ppm [3]	125 ppm [4]
Nitrogen oxides	Nitric oxide	NO	—	25 ppm	75 ppm [3]	100 ppm [4]
	Nitrogen dioxide	NO_2	—	3 ppm	5	20 ppm
Chlorine	Chlorine	Cl_2	—	0.5 ppm	1.0	10 ppm
Hydrocarbons	Natural gas & methane	92% CH_4 & 100% CH_4	5%	—	—	—
	Propane	C_3H_8	2.1%	—	—	2,100 ppm
	Acetylene	C_2H_2	2.5%	—	—	—
Refrigerants	R-410A	CH_2F_2 (50%) CHF_2CF_3 (50%)	—	1,000 ppm	3,000 ppm [3]	5,000 ppm [4]
	R-134a	CH_2FCF_3	—	1,000 ppm	3,000 ppm [3]	5,000 ppm [4]
	R-22	$CHClF_2$	—	1,000 ppm	3,000 ppm [3]	5,000 ppm [4]
Ammonia	Ammonia	NH_3	—	25 ppm (LEL=15%)	35 ppm	300 ppm
Ozone	Ozone	O_3	—	0.1 ppm	0.3 ppm	5.0 ppm
Carbon dioxide	Carbon dioxide	CO_2	—	5,000 ppm	30,000 ppm	40,000 ppm

[1] Time-weighted average gas concentration
[2] Instantaneous gas concentration
[3] 15-minute exposure limit is not defined, therefore 15-minute exposure limit is set to 3 x the 8-hour exposure limit, except if that value is higher than the IDLH concentration; as per the Occupational Health & Safety Code — Part 4
[4] 15-minute exposure limit is not defined, therefore ceiling limit set to 3 x the 8-hour exposure limit or the IDLH concentration, whichever is lower; as per the Occupational Health & Safety Code — Part 4